Tally®

T9312

**Maintenance manual** **Laser printer**

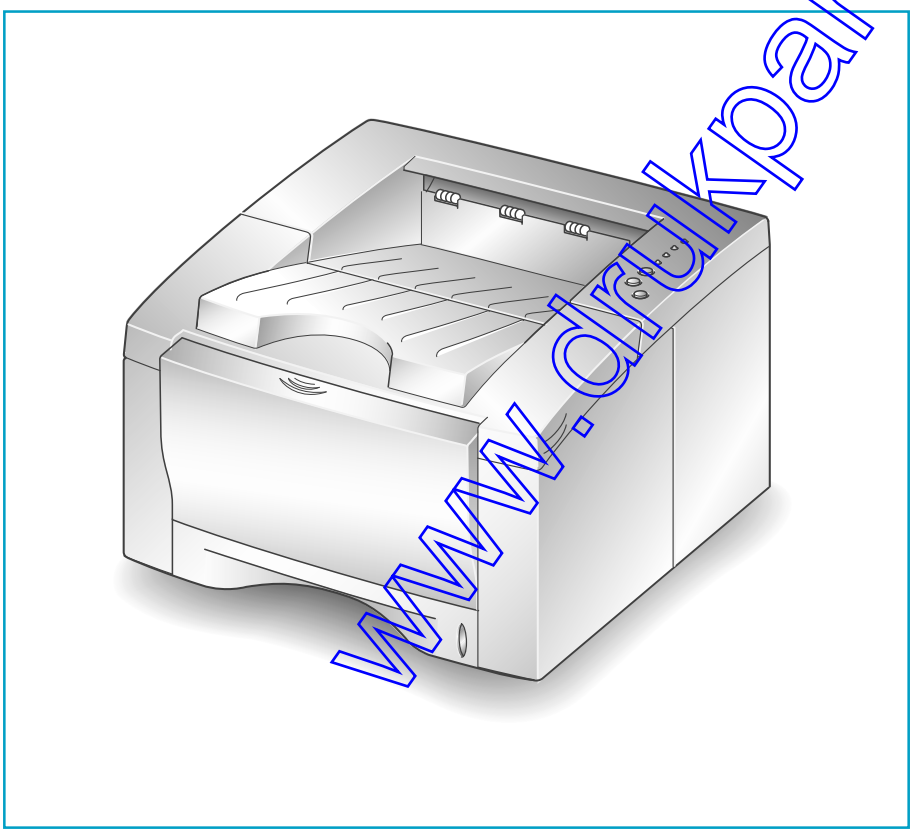

www.drukparts.pl

## 5-1 Main Exploded View

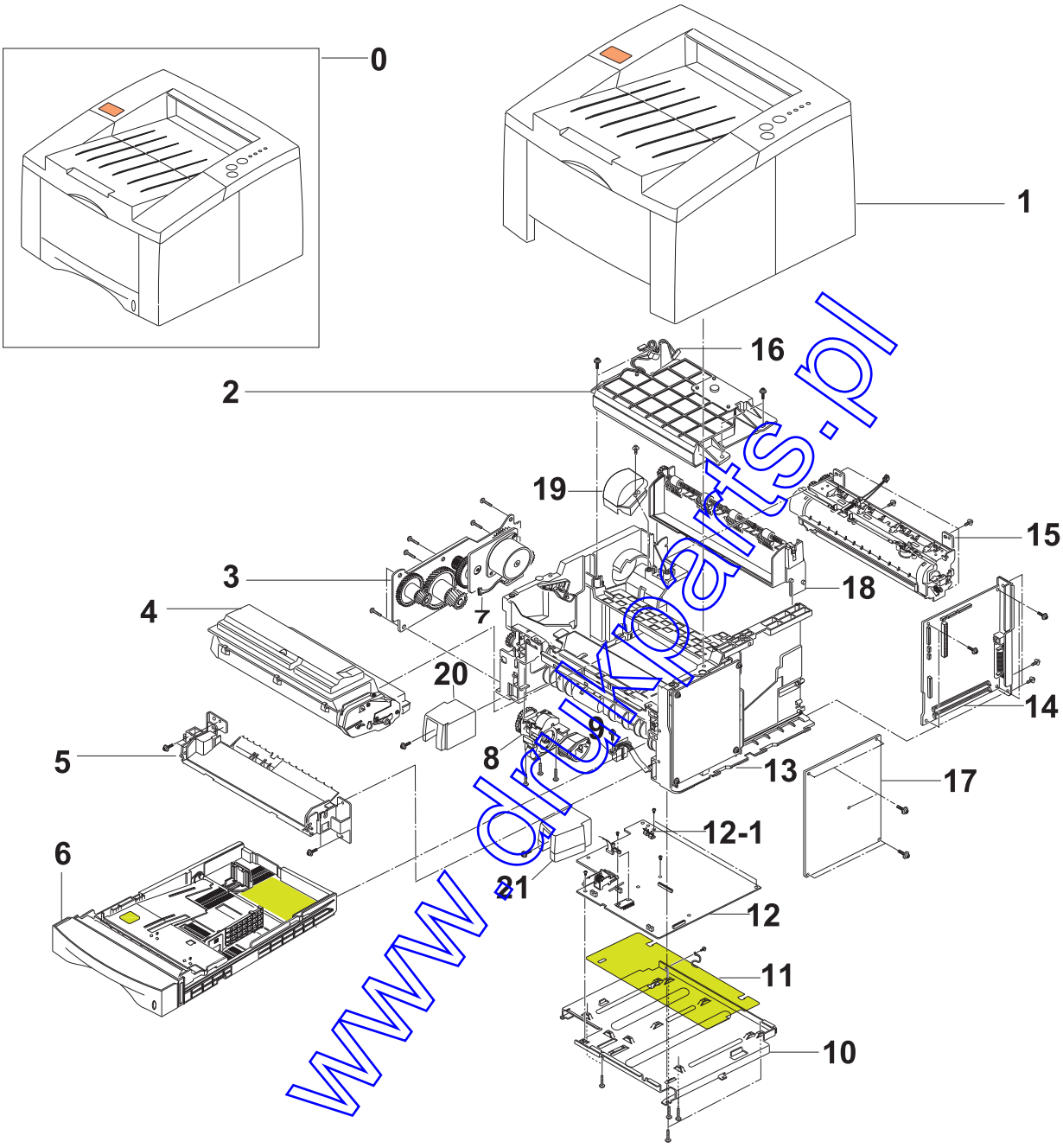


www.drukparts.pl

## Main Parts List

| Location No. | Description | Code | Q'ty |
|---|---|---|---|
| 1 | ELA HOU-HOUSING T9312C | 398 471 | 1 |
| 2 | UNIT-LSU | 398 425 | 1 |
| 3 | ELA UNIT-MOTOR | 398 464 | 1 |
| 4 | ELA UNIT-DEVE ASSY | | 1 |
| 5 | MEC RACK-MPF | | 1 |
| 6 | MEA RACK-FEEDER CST | 398 473 | 1 |
| 7 | CBF-HARNESS-MOTOR | | 1 |
| 8 | MEA UNIT-FEEDER | 398 427 | 1 |
| 9 | PMO-CAP SENSOR | | 1 |
| 10 | SHIELD-PCU | | 1 |
| 11 | PCT-INSULATOR PCU | | 1 |
| 12 | PBA MAIN-ENGINE_V2 | 398 432 | 1 |
| 12-1 | FUSE-CARTRIDGE | 396 403 | 1 |
| 13 | ELA UNIT-FRAME BASE | 398 433 | 1 |
| 14 | PBA MAIN CTRL-LOW | 398 470 | 1 |
| 15 | ELA UNIT-FUSER | 398 472 | 1 |
| 16 | CBF HARNESS-LSU | | 1 |
| 17 | PBA PWR-HVPS_HAWK | 398 495 | 1 |
| 18 | MEA RACK-HOU EXIT | 398 496 | 1 |
| 19 | PMO-DUCT FAN | | 1 |
| 20 | PMO-DUMMY FACE MAIN(L) | | 1 |
| 21 | PMO-DUMMY FACE MAIN(R) | | 1 |
| | | | |
| | | | |

www.drukparts.pl

## 5-2 Cover Exploded View

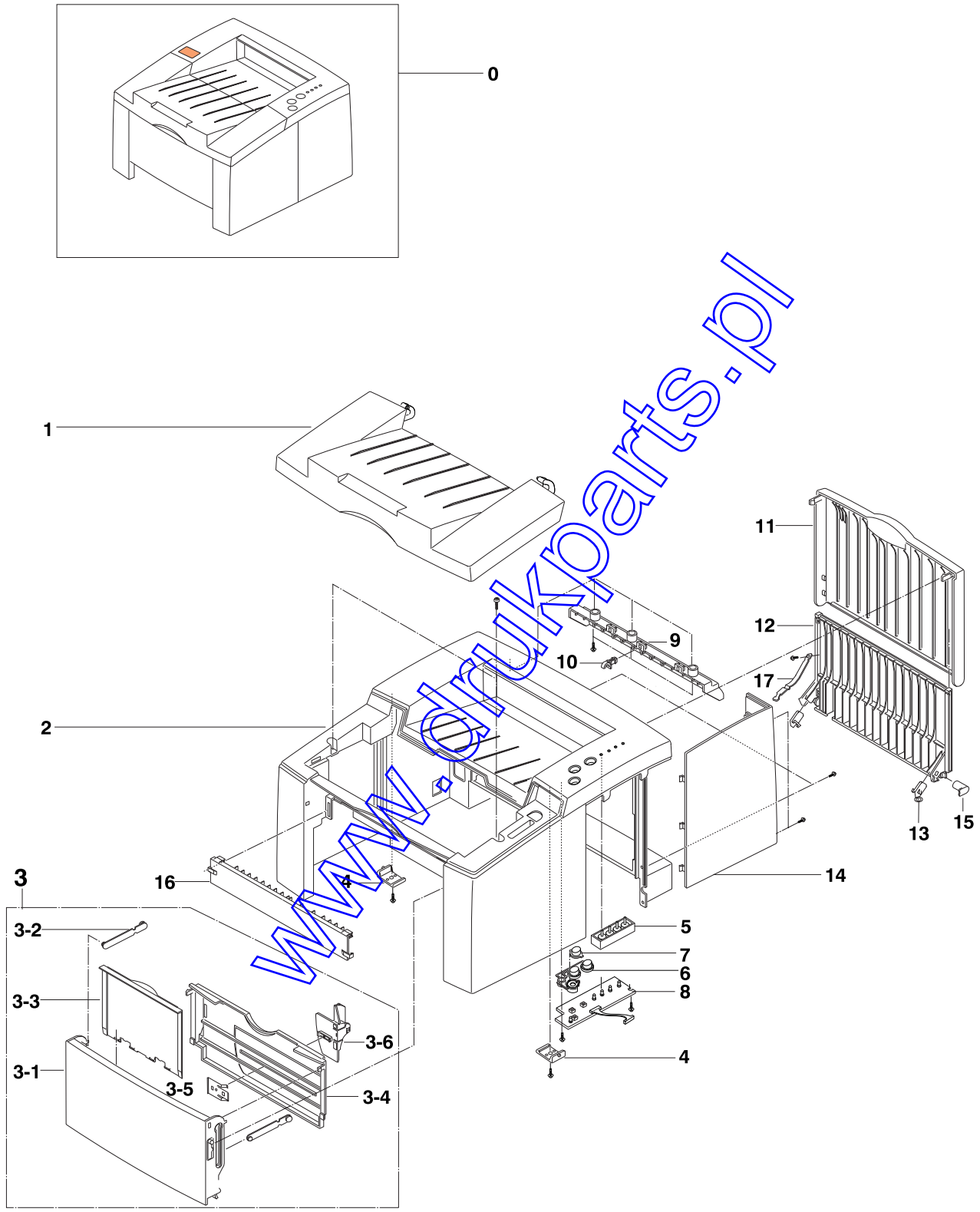


www.drukparts.pl

## Cover Parts List

| Location No. | Description | Code | Q'ty |
|---|---|---|---|
| 0 | ELA HOU-COVER MAIN (T9312) | 398 471 | 1 |
| 1 | PMO-COVER OPEN | | 1 |
| 2 | PMO-COVER MAIN | | 1 |
| 3 | MEA UNIT-MP TRAY | 398 438 | 1 |
| 3-1 | PMO-COVER-MP | | 1 |
| 3-2 | PMO-TRAY LINK MP | | 2 |
| 3-3 | PMO-TRAY EXTENSION MP | | 1 |
| 3-4 | PMO-TRAY HOLDER MP | | 1 |
| 3-5 | IPR-GUIDE LATCH | | 1 |
| 3-6 | PMO-SIDE GUIDE MP | | 1 |
| 4 | STOPPER HINGE OPEN | | 2 |
| 5 | PMO-LENS LED | | 1 |
| 6 | PMO-KEY BUTTON | | 1 |
| 7 | PMO-KEY SAVE MODE | | 1 |
| 8 | PBA LED PANEL-II | 399 454 | 1 |
| 9 | PMO-GUIDE EXIT | | 1 |
| 10 | PMO-BUSHING F/DOWN | | 1 |
| 11 | PMO-COVER REAR | 398 439 | 1 |
| 12 | PMO-STACKER REAR | 398 440 | 1 |
| 13 | IPR-SPRING LOCKER REAR | 398 441 | 2 |
| 14 | PMO-COVER CONTROLLER | 398 442 | 1 |
| 15 | PMO-CAP REAR | 398 443 | 1 |
| 16 | PMO-SUPPONT MAIN | | 1 |
| 17 | PMO-STOPPER EXIT,P | | 1 |
| S1 | SCREW-TAPTITE | | 7 |
| | | | |

www.drukparts.pl

## 5-3 Frame Exploded View

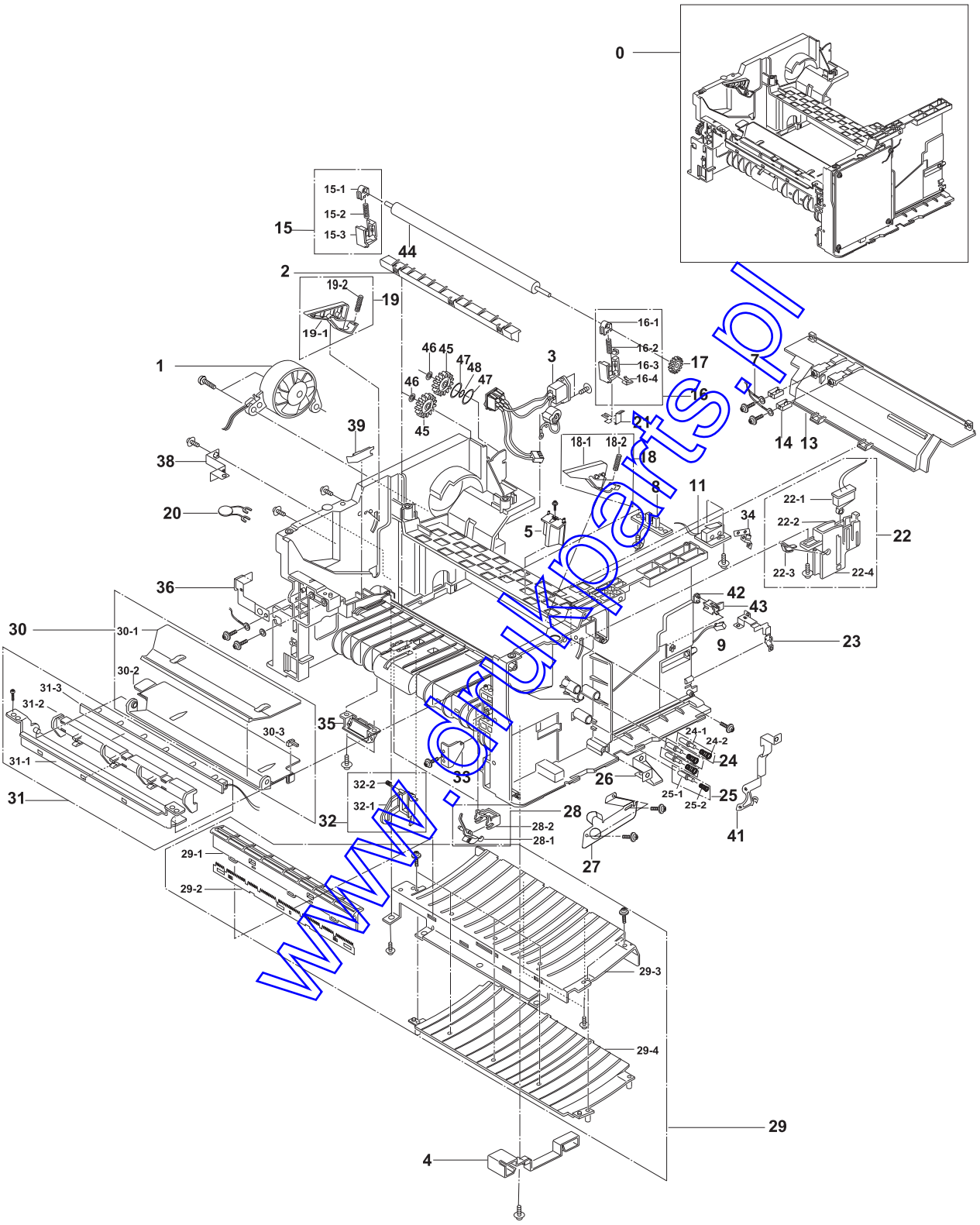


www.drukarki.pl

## Frame Parts List

| Location No. | Description | Code | Q'ty |
|---|---|---|---|
| 0 | ELA UNIT-FRAME BASE | | 1 |
| 1 | FAN-DC-HAWK | 398 444 | 1 |
| 2 | PMO-GUIDE RIB | | 1 |
| 3 | CBF HARNESS-INLET ASS'Y | | 1 |
| 4 | PMO-HOLDER WIRE | | 1 |
| 5 | PMO-KEY DEVE HAWK | | 1 |
| 6 | CBF HARNESS-ENGINE_CONTROL | | 1 |
| 7 | CBF-HARNESS_FUSER | | 1 |
| 8 | PBA SUB-EXIT SENSOR | 398 445 | 1 |
| 9 | CBF-HARNESS-THERMISTOR JOINT | | 1 |
| 11 | PBA SUB-FUSER_SW | 398 446 | 1 |
| 13 | PMO-FRAME COVER | | 1 |
| 14 | IPR-TERMINAL FU | | 2 |
| 15 | ELA-UNIT-HOLDER TR L | 398 447 | 1 |
| 15-1 | PMO-BUSHING TR | | 1 |
| 15-2 | SPRING TR L HAWK | | 1 |
| 15-3 | PMO-TRANSFER HOLDER L | | 1 |
| 16 | ELA-UNIT-HOLDER TR R | 398 448 | 1 |
| 16-1 | PMO-BUSHING TR | | 1 |
| 16-2 | SPRING TR R HAWK | | 1 |
| 16-3 | PMO-TRANSFER HOLDER R | | 1 |
| 16-4 | IPR-PLATE TR | | 1 |
| 17 | GEAR-TR 29 | 398 449 | 1 |
| 18 | ELA UNIT-GUIDE DEVE L | 398 450 | 1 |
| 18-1 | PMO-GUIDE DEVE L | | 1 |
| 18-2 | SPRING GUIDE DEVE | | 1 |
| 19 | ELA UNIT-GUIDE DEVE R | 398 451 | 1 |
| 19-1 | PMO-GUIDE DEVE R | | 1 |
| 19-2 | SPRING GUIDE DEVE | | 1 |
| 20 | ELA HOU-VARISTOR | | 1 |

www.drukparts.pl

## Frame Parts Lists

| Location No. | Description | Code | Q'ty |
|---|---|---|---|
| 21 | IPR-TERMINAL TR HAWK | | 1 |
| 22 | ELA UNIT-SENSOR DEVE | | 1 |
| 22-1 | PBA -SUB SWITCH | 398 452 | 1 |
| 22-2 | PMO-HOLDER ACTUATOR | | 1 |
| 22-3 | PMO-ACTUATOR DEVE | | 1 |
| 23 | GROUND FU | | 1 |
| 24 | ELA UNIT-TERMINAL TR L | 399 455 | 3 |
| 24-1 | ICT-SHAFT HV LARGE | | 3 |
| 24-2 | SPRING-HV LARGE | | 3 |
| 25 | ELA UNIT-TERMINAL TR S | 399 456 | 1 |
| 25-1 | ICT-SHAFT HV LARGE | | 1 |
| 25-2 | SPRING-HV SMALL | | 1 |
| 26 | GROUND-HVPS | | 1 |
| 27 | IPR-REMOVE KEY XEROX | | 1 |
| 28 | ELA UNIT-ACTUATOR FEED | 399 457 | 1 |
| 28-1 | PMO-ACTUATOR FEED | | 2 |
| 28-2 | PMO-HOLDER ACTUATOR | | 2 |
| 29 | ELA UNIT-GUIDE TRANSFER | | 1 |
| 29-1 | PMO-HADER PLATE SAW | | 1 |
| 29-2 | IPR-PLATE SAW | | 1 |
| 29-3 | IPR-GUIDE TRANSFER HAWK | | 1 |
| 29-4 | PMO-GUIDE RIB TR | | 1 |
| 30 | ELA UNIT-GUIDE FEED | 398 453 | 1 |
| 30-1 | PMO-GUIDE OPTIC | | 1 |
| 30-2 | GUIDE FEED | | 1 |
| 30-3 | PMO-HOLDER G/PAPER | | 1 |
| 31 | ELA UNIT-PTL | 398 454 | 1 |
| 31-1 | GUIDE PLATE FEED | | 1 |
| 31-2 | PMO-HOLDER PTL | | 1 |
| 31-3 | PBA SUB-PTL | | 1 |
| | | | |

www.drukparts.pl

## Frame Parts Lists

| Location No. | Description | Code | Q'ty |
|---|---|---|---|
| 32 | ELA UNIT-EMPTY ACT | 399 458 | 1 |
| 32-1 | PMO-ACTUATOR EMPTY HAWK | | 1 |
| 32-2 | SPRING EMPTY | | 1 |
| 33 | PMO-HINGE GUIDE FEED | | 1 |
| 34 | IPR-GND ICU 2 | | 1 |
| 35 | PMO-CAP SENSOR | 399 459 | 1 |
| 36 | GND MP | | 1 |
| 38 | GROUND MOTOR | | 1 |
| 39 | IPR-GUIDE_DUST | | 1 |
| 41 | IPR-OPC HAWK | | 1 |
| 42 | CAP CONNECTOR L | | 1 |
| 43 | CAP CONNECTOR U | | 1 |
| 44 | MEC-ROLLER TRANSFER | 398 455 | 1 |
| 45 | GEAR-IDLE27 | 398 467 | 2 |
| 46 | RING-CS | | 2 |
| 47 | WASHER-PLAIN | | 2 |
| 48 | IPR-WASHER SPRING SU | | 1 |

www.drukparts.pl

## 5-4 Exit Exploded View

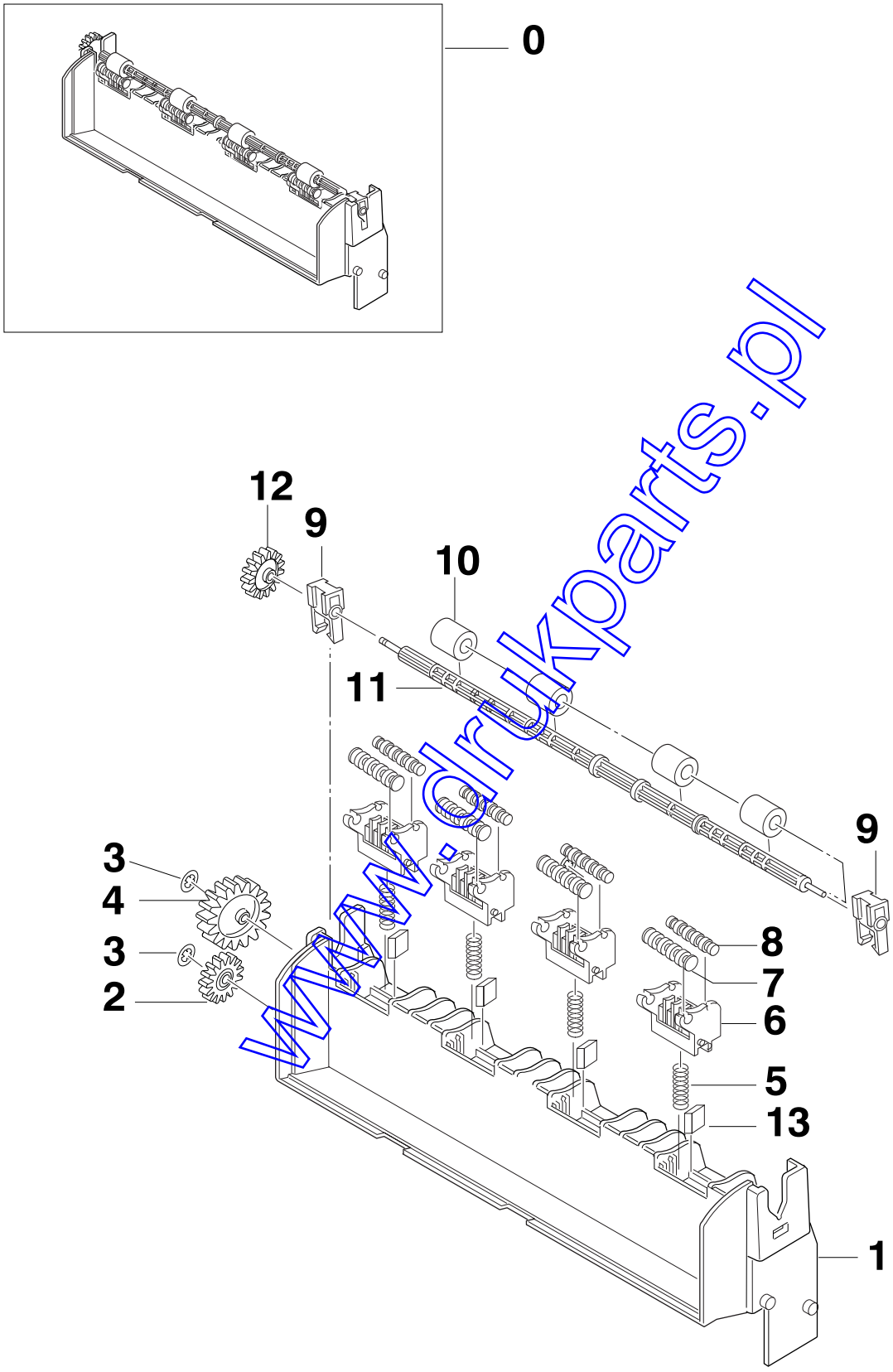


www.drukparts.pl

## Exit Parts List

| Location No. | Description | Code | Q'ty |
|---|---|---|---|
| 0 | MEA RACK-HOU EXIT | 398 436 | 1 |
| 1 | PMO-FRAME REAR | | 1 |
| 2 | GEAR-IDLE 15 | | 1 |
| 3 | RING-CS | | 2 |
| 4 | GEAR-IDLE 25 | | 1 |
| 5 | SPRING-F/DOWN | | 4 |
| 6 | PMO-HOLDER EXIT_F/DOWN | | 4 |
| 7 | PMO-ROLLER-EXIT, MAIN | | 4 |
| 8 | PMO-ROLLER-EXIT, FR | | 4 |
| 9 | MEC-BEARING EXIT | | 2 |
| 10 | RMO-RUBBER EXIT | | 4 |
| 11 | PMO-SHAFT EXIT_F/DOWN | | 1 |
| 12 | GEAR-EXIT | | 1 |
| 13 | RMP-RUBBER EXIT_F/UP | | 4 |

www.drukparts.pl

## 5-5 Fuser Exploded View

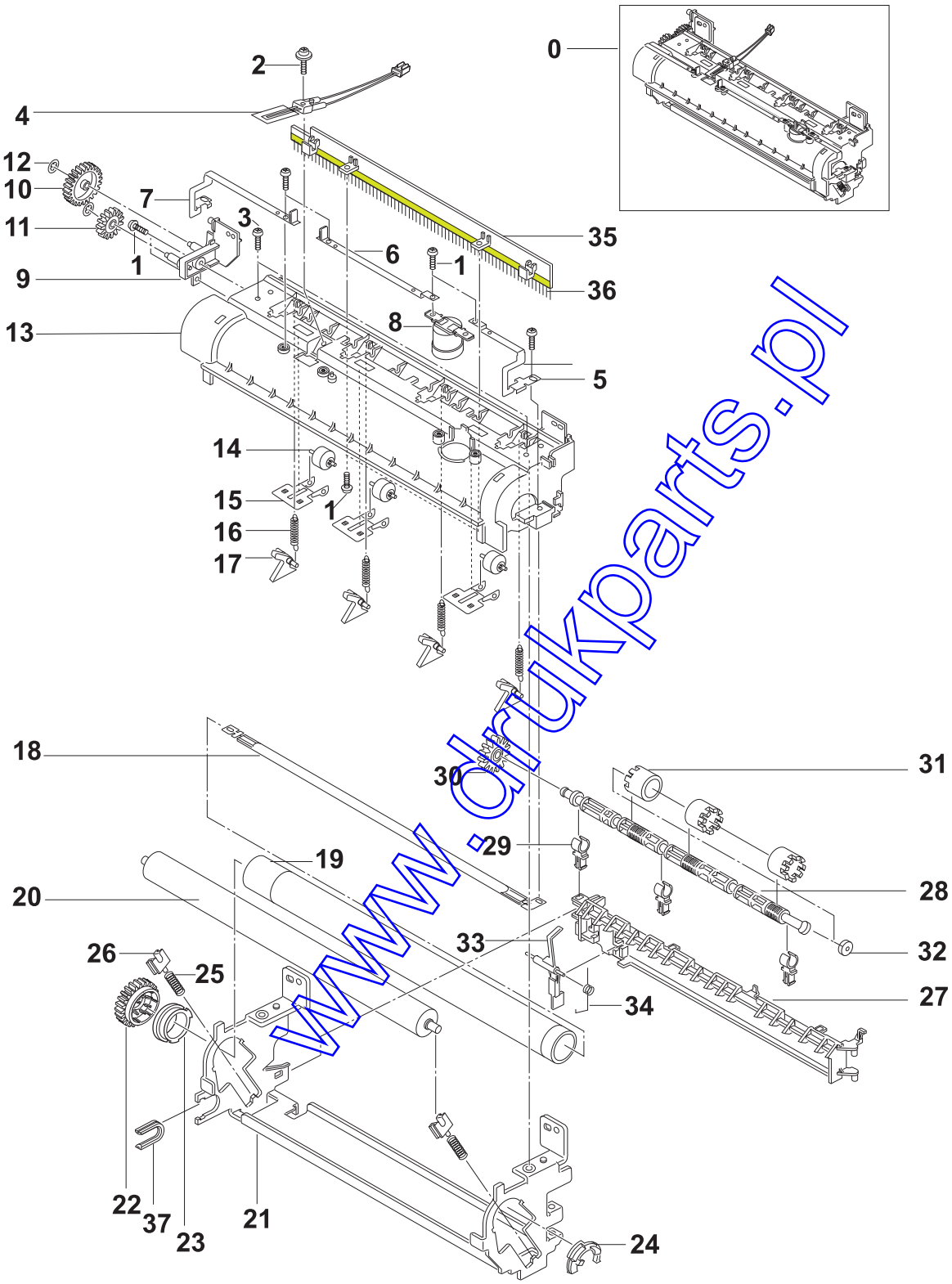


www.drukparts.pl

## Fuser Parts List

| Location No. | Description | Code | Q'ty |
|---|---|---|---|
| 0 | ELA UNIT FUSER (220V) | 398 472 | 1 |
| 1 | SCREW TAPTITE M3 x 8, BH+ | | 6 |
| 2 | SCREW TAPTITE M3 x 10, FH+ | | 1 |
| 3 | SCREW MACHINE M3 x 6 | | 2 |
| 4 | THERMISTOR-FUSER | 398 457 | 1 |
| 5 | NPR-ELECTRODE FU R | | 1 |
| 6 | NPR-ELECTRODE FU M | | 1 |
| 7 | NPR-ELECTRODE FU L | | 1 |
| 8 | THERMOSTAT | 398 458 | 1 |
| 9 | PMO-BRKT GEAR FUSER | | 1 |
| 10 | GEAR-IDLE 25 | 399 460 | 1 |
| 11 | GEAR-IDLE 15 | 399 461 | 1 |
| 12 | RING-CS | | 2 |
| 13 | PMO-COVER FUSER | | 1 |
| 14 | PMO-ROLLER EXIT_F/UP | | 3 |
| 15 | IPR-EXIT_F/UP (SPRING) | | 3 |
| 16 | SPRING-CLAW | 398 462 | 4 |
| 17 | PMO-GUIDE CLAW | | 4 |
| 18 | LAMP-HALOGEN | 398 459 | 1 |
| 19 | NEX-ROLLER-HEAT | | 1 |
| 20 | MEC-ROLLER PRESSURE | | 1 |
| 21 | ICT-FRAME FUSER | | 1 |
| 22 | GEAR FUSER, Z32 | | 1 |
| 23 | PMO-BUSHING HR-L | | 1 |
| 24 | PMO-BUSHING HR-R | | 1 |
| 25 | PMO-SPRING-BEARING PR | | 2 |
| 26 | PMO-BUSHING PR | | 2 |
| 27 | PMO-GUIDE REAR | 398 460 | 1 |
| 28 | PMO-SHAFT EXIT_F/UP | | 1 |
| 29 | PMO-BUSHING TX | | 3 |
| 30 | GEAR-EXIT | 399 463 | 1 |
| 31 | PMO-RUBBER EXIT | | 3 |
| 32 | PMO-RUBBER EXIT_F/UP | | 1 |
| 33 | PMO-ACTUATOR EXIT | | 1 |
| 34 | SPRING-ACTUATOR | | 1 |
| 35 | PMO-HOLDER_BRUSH | | 1 |
| 36 | MEC-BRUSH ANTISTATIC | | 1 |
| 37 | PMO-HOLDER SHAFT | | 1 |
| 38 | SEREW TAPTITE M3X6,BH+ | | 4 |
| | | | |
| | | | |

www.drukparts.pl

## 5-6 Rack-MPF Exploded View

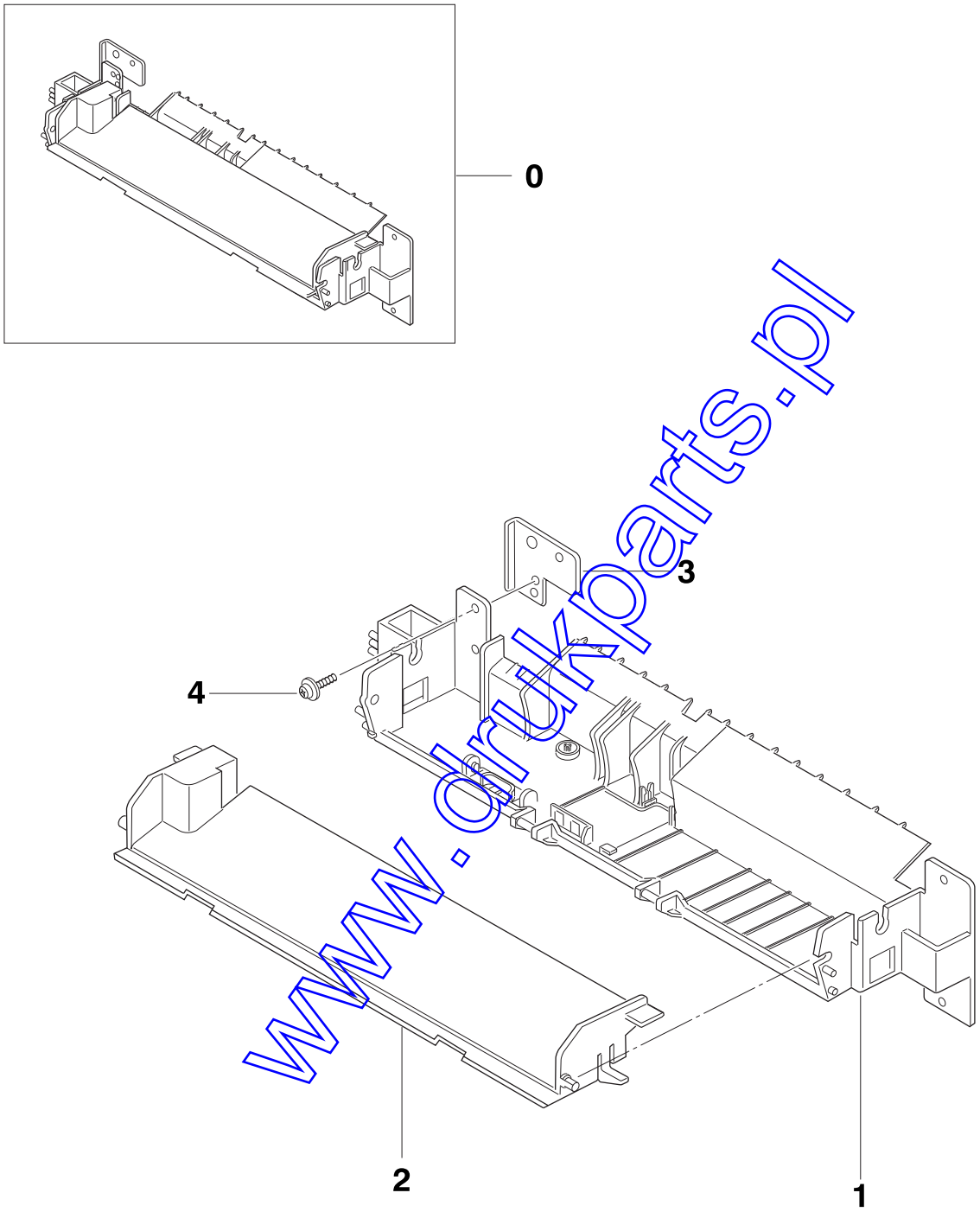


www.drukparts.pl

## Rack-MPF Parts List

| Location No. | Description | Code | Q'ty |
|---|---|---|---|
| 0 | ELA HOU-MPF | | 1 |
| 1 | PMO-FRAME_MP | | 1 |
| 2 | PMO-PLATE MANUAL | | 1 |
| 3 | BRACKET-MANUAL | | 1 |
| 4 | SCREW TAPTITE | | 1 |

www.drukparts.pl

## 5-7 Drive Exploded View

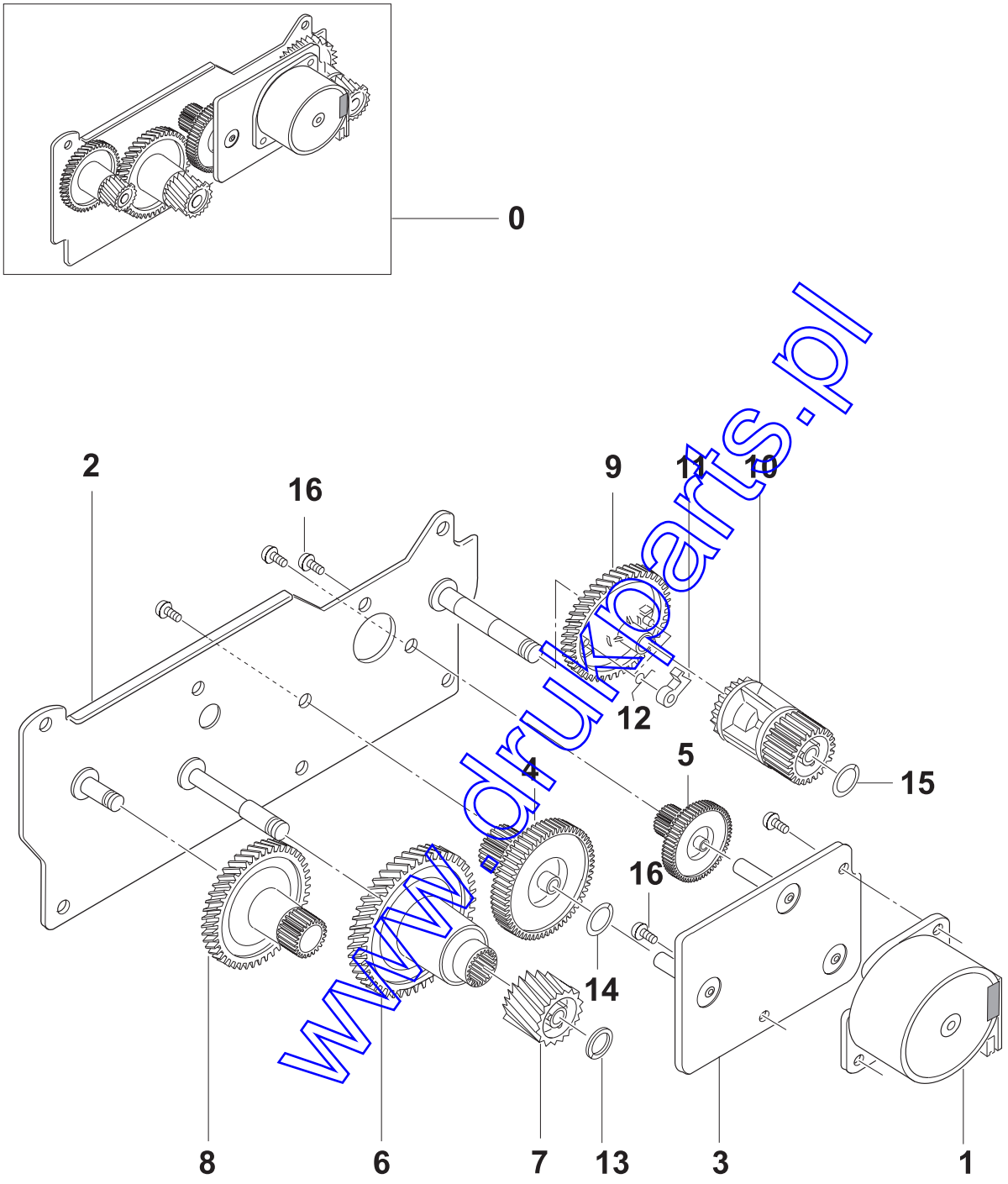


www.drukparts.pl

## Drive Parts List

| Location No. | Description | Code | Q'ty |
|---|---|---|---|
| 0 | ELA UNIT-MOTOR | 398 464 | 1 |
| 1 | MOTOR-STEP | 398 465 | 1 |
| 2 | IPR-BRKT GEAR | | 1 |
| 3 | IPR-BRKT MOTOR | | 1 |
| 4 | GEAR-RDCN 145-70 | | 1 |
| 5 | GEAR-RDCN 90-24 | | 1 |
| 6 | GEAR-OPC DRV 135 | | 1 |
| 7 | GEAR-OPC DRIVE2 | | 1 |
| 8 | GEAR-FEED DRV | | 1 |
| 9 | GEAR-CLUTCH 56 | | 1 |
| 10 | GEAR-FUSER DRV23 | | 1 |
| 11 | PMO-CLUTCH LEVER | | 2 |
| 12 | SPRING-CLUTCH | | 2 |
| 13 | WASHER-PLAIN | | 1 |
| 14 | MPR-POLYWASHER 8 | | 1 |
| 15 | WASHER-PLAIN | | 1 |
| 16 | SCREW-MACHINE | | 5 |

www.drukparts.pl

## 5-8 Pick-Up Exploded View

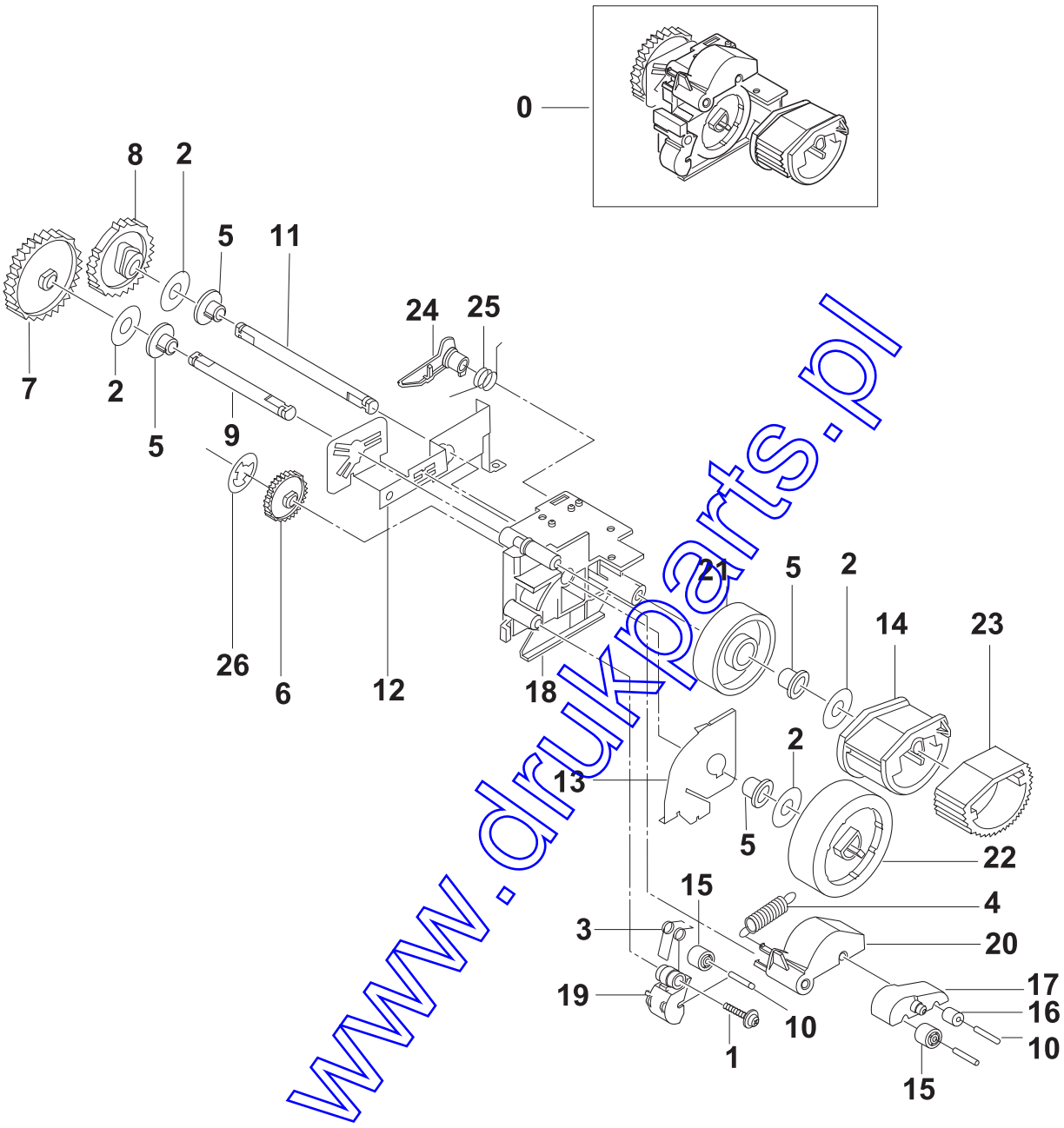


www.drukparts.pl

## Pick-Up Parts List

| Location No. | Description | Code | Q'ty |
|---|---|---|---|
| 0 | MEA UNIT-FEEDER | 398 427 | 1 |
| 1 | SCREW-TAPTITE | | 1 |
| 2 | WASHER-PLAIN | | 4 |
| 3 | SPRING-FEED(1) | 399 468 | 1 |
| 4 | SPRING-FEED(2) | 399 469 | 1 |
| 5 | BEARING-PICK UP | | 4 |
| 6 | GEAR-P/UP DRIVE | | 1 |
| 7 | GEAR-FEED | | 1 |
| 8 | GEAR-PICK UP(12) | | 1 |
| 9 | IPR-SHAFT FEED | | 1 |
| 10 | IPR-SHAFT FEED IDLER | | 3 |
| 11 | IPR-SHAFT PICK UP | | 1 |
| 12 | GROUND_FEED | | 1 |
| 13 | IPR-GUIDE_FEED | | 1 |
| 14 | PMO-HOUSING P/UP | | 1 |
| 15 | PMO-ROLLER FEED L | | 2 |
| 16 | PMO-ROLLER FEED S | | 1 |
| 17 | PMO-SUB HOLDER FEED | | 1 |
| 18 | PMO-FRAME_FEED | | 1 |
| 19 | PMO-HOLDER FEED(1) | | 1 |
| 20 | PMO-HOLDER FEED(2) | | 1 |
| 21 | PMO-IDLE PICK_UP | | 1 |
| 22 | PMO-ROLL_FEED, DRV 12 | | 1 |
| 23 | RMO-RUBBER PICK_UP | 396 364 | 1 |
| 24 | RMO-LEVER PICK_UP | | 1 |
| 25 | SPRING PICK UP(12) | | 1 |
| 26 | RING-CS | | 1 |

www.drukparts.pl

## 5-9 Cassette Exploded View (270)

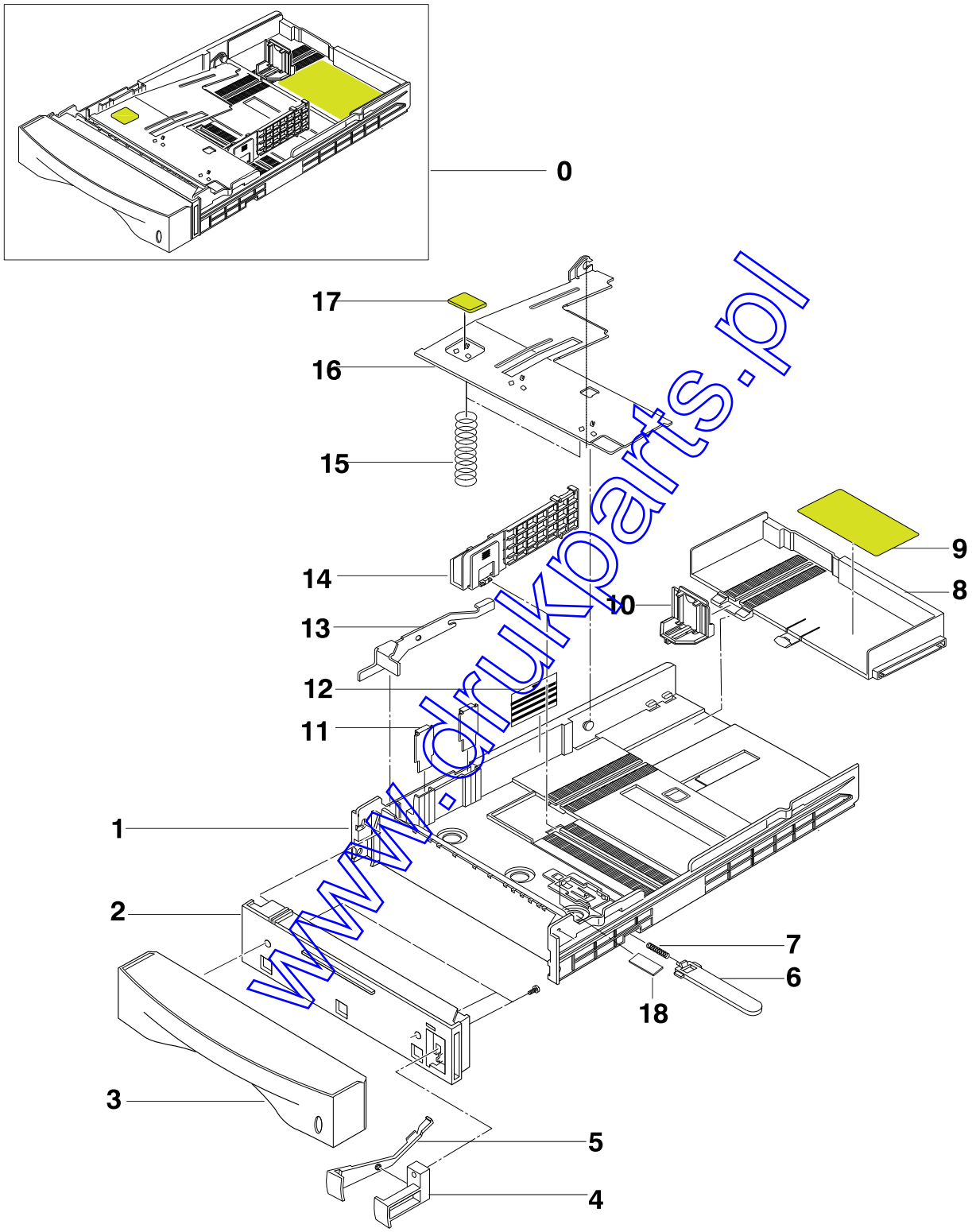


www.drukparts.pl

## Cassette Parts List

| Location No. | Description | Code | Q'ty |
|---|---|---|---|
| 0 | MEA UNIT-FEED CST A6(270) | 398 473 | 1 |
| 1 | PMO-FRAME CAT A6 | | 1 |
| 2 | PMO-GUIDE INNER,CAST | | 1 |
| 3 | PMO-GUIDE CASSETTE | | 1 |
| 4 | PMO-HOLDER INDICATOR | | 1 |
| 5 | PMO-INDICATOR EMPTY IBM | | 1 |
| 6 | PMO-LOCKER PLATE | | 1 |
| 7 | SPRING LOCKER,PLATE | | 1 |
| 8 | PMO-FRAME LEGAL | | 1 |
| 9 | LABEL(R)-PLATE | | 1 |
| 10 | PMO-REAR GUIDE CST | | 1 |
| 11 | IPR-GUIDE PAPER | | 1 |
| 12 | LABEL(R)-HEIGHT | | 1 |
| 13 | IPR-FINGER | | 1 |
| 14 | PMO-SIDE GUIDE | | 1 |
| 15 | SPRING-KNOCK UP | | 1 |
| 16 | IPR-NOCK UP PLATE | | 1 |
| 17 | MPR-PAD CST | | 1 |
| 18 | GUIDE-PAPER FILM | | 1 |

www.drukparts.pl