SAMSUNG

# Parts Catalog - SF-650 / 650P

www.drukparts.pl

1. Print Speed (Only SF-650P)
   - 19 ppm in Letter

2. Copy Speed
   - 19 ppm in Letter

3. Processor
   - Chorus2 66 Mhz

4. Interfaces
   - One USB port

6. Toner cartridge
   - Initial: 1K, starter cartridge
   - Sales : 1.5K / 2.5K two types

7. Machine Life : 50,000 pages

This Parts Catalog is a property of Samsung Electronics Co.,Ltd.
Any unauthorized use of this manual can be punished under
applicable International and/or domestic law.

www.drukparts.pl

# ExplodedView and Parts List

## Contents


Power Cord ..... 4

Thumbnail ..... 5

1. MAIN ..... 7

2. COVER ..... 9

3. COVER FRONT ..... 11

4. COVER REAR ..... 13

5. ADF FRAME-MAIN_650P ..... 15

6. ADF FRAME-MAIN_650 ..... 17

7. COVER-TOP ..... 19

8. ADF STACKER-TX ..... 21

9. HANDSET ..... 23

10. ADF FRAME-LOWER ..... 25

11. DRIVE-ADF ..... 27

12. ADF FRAME-UPPER_650P ..... 29

13. ADF FRAME-UPPER_650 ..... 31

14. FRAME-LOWER ..... 33

15. FRAME BASE-PICK UP ..... 37

16. DRIVE MAIN-BRACKET ..... 39

17. FUSER ..... 41

18. CASSETTE ..... 43


www.drukparts.pl

# Power Cord

Power Cord differs by countries. Please check your country code.

| Top View | Side View | Part Code<br>Usable Country Code |
|---|---|---|
| | 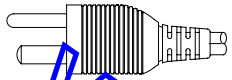 | 3903-000020<br>XAZ |
| 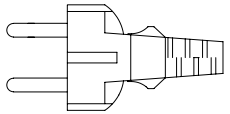 | 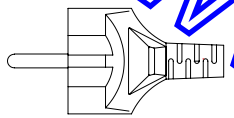 | 3903-000042<br>BEE / STS / XSA / XSG<br>XSG / XEV / YEG |
| 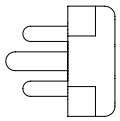 | 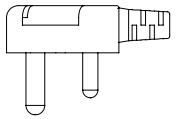 | 3903-000050<br>XFA / XIP |
| 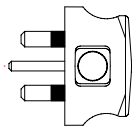 | 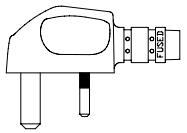 | 3903-000067<br>XEU / XSS |
| 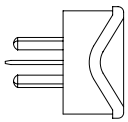 | 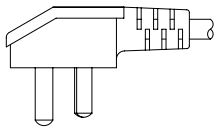 | 3903-000082<br>XIL |

| Top View | Side View | Part Code<br>Usable Country Code |
|---|---|---|
| 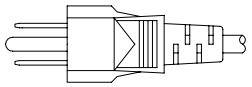 | 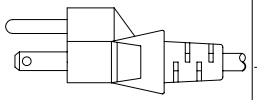 | 3903-000085<br>XAA / XAX |
| 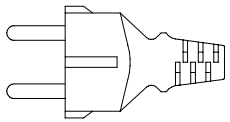 | 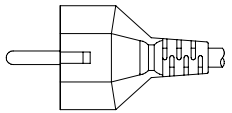 | 3903-000133<br>KOR |
| 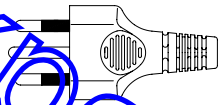 | 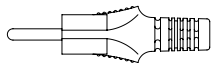 | 3903-000146<br>XBH |
| 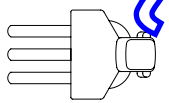 | 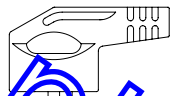 | 3903-000182<br>ETS |
| 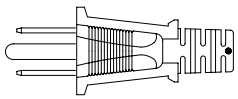 | 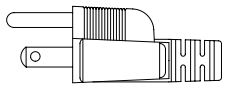 | 3903-000227<br>TED |

www.orukparts.pl

## Thumbnail 1

| | | | | |
|---|---|---|---|---|
| 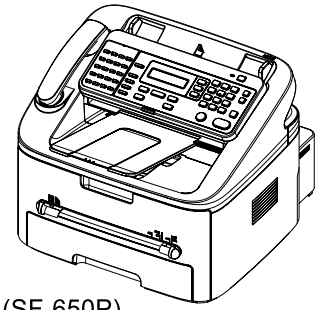 (SF-650P) | 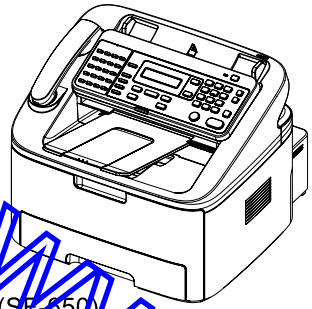 (SF-650) | 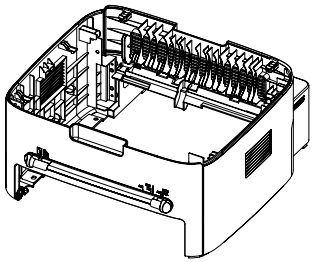 | 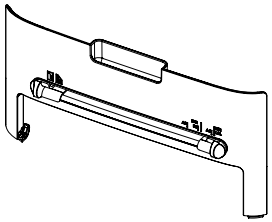 | 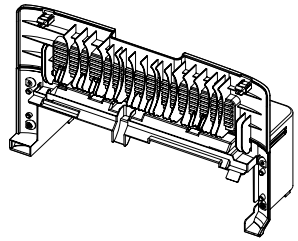 |
| 1. MAIN | | 2. COVER | 3. COVER FRONT | 4. COVER REAR |
| 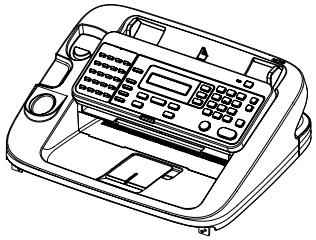 | 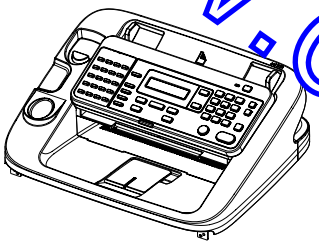 | 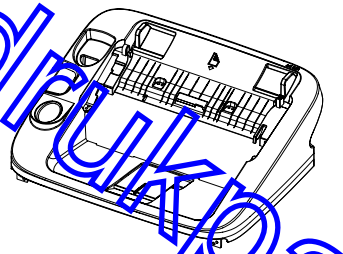 | 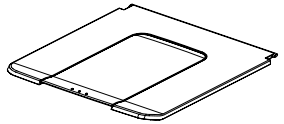 | 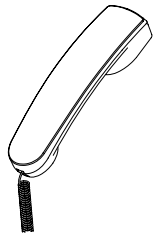 |
| 5. ADF FRAME-MAIN_650P | 6. ADF FRAME-MAIN_650 | 7. COVER-TOP | 8. ADF STACKER-TX | 9. ELA UNIT-HANDSET |
| 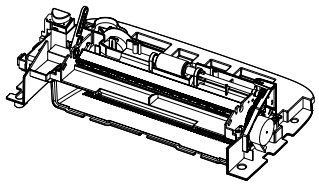 | 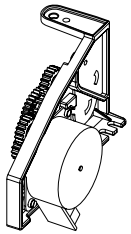 | 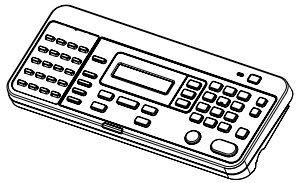 | 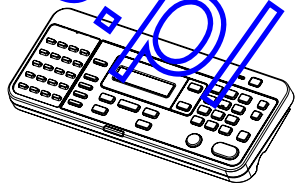 | 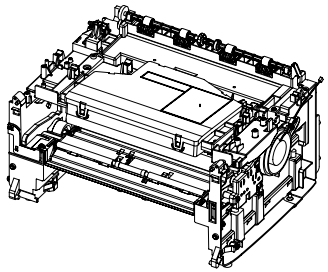 |
| 10. ADF FRAME-LOWER | 11. DRIVE-ADF | 12. ADF FRAME-UPPER_650P | 13. ADF FRAME-UPPER_650 | 14. FRAME-LOWER |

www.drukparts.pl

## Thumbnail 2

| | | | |
|---|---|---|---|
| 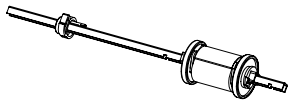 | 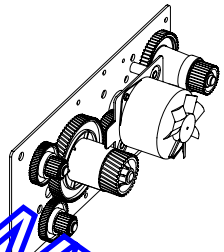 | 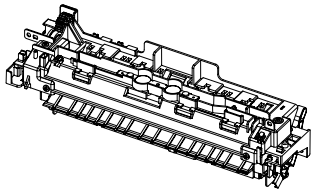 | 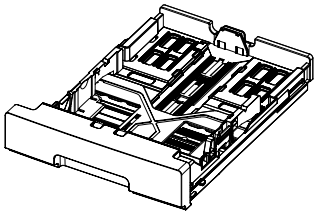 |
| 15. FRAME BASE-PICK UP | 16. DRIVE MAIN-BRACKET | 17. FUSER | 18. CASSETTE |

www.drukparts.pl

# 1. MAIN

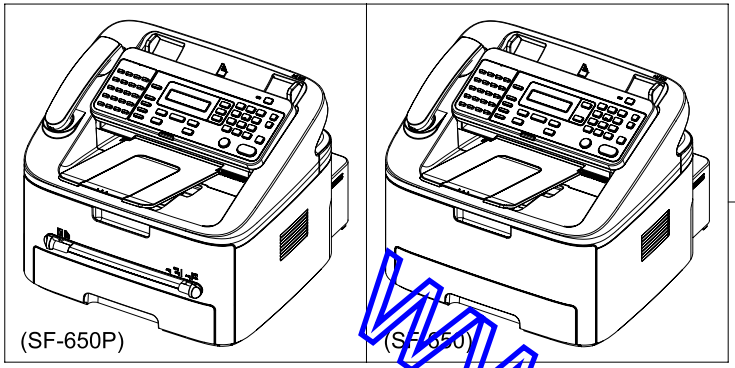


0

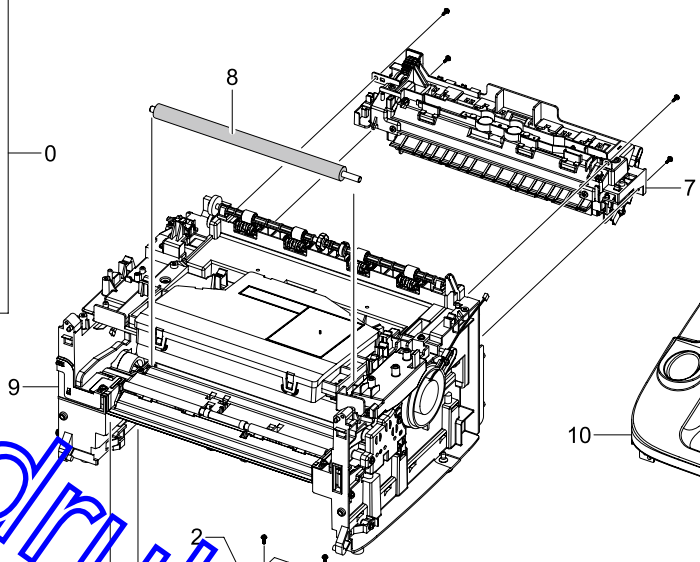


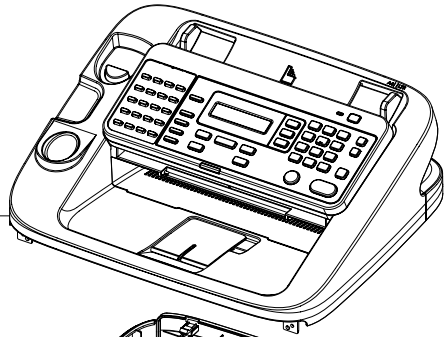


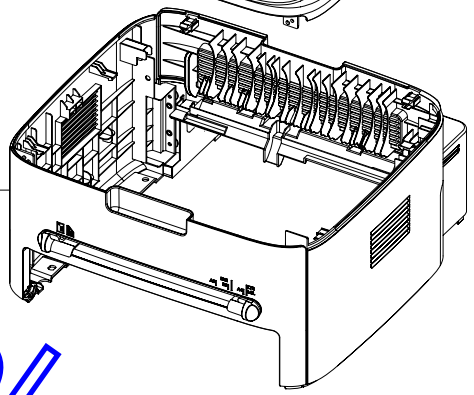


12

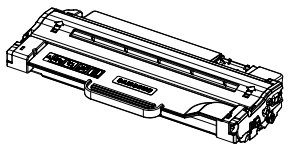

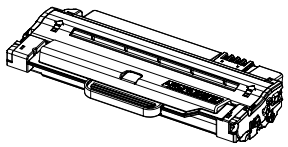

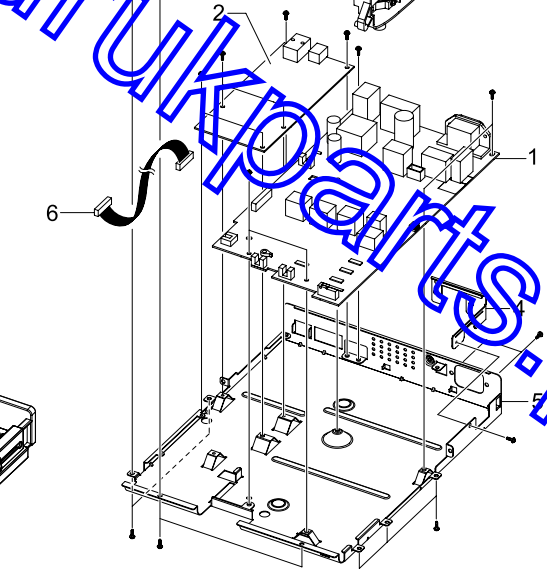


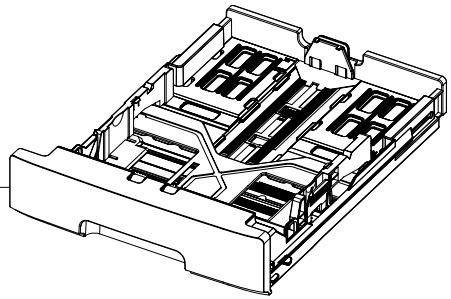


13

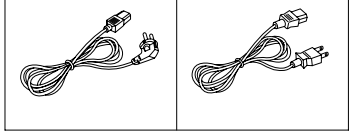

www.drukparts.pl

## MAIN Parts List

SA : SERVICE AVAILABLE, SNA : SERVICE not AVAILABLE

| Drawer# | SEC_Code | Description | QT'y | Service | Remark |
|---|---|---|---|---|---|
| 0 | SF-650P | SET | 1 | | |
| 0 | SF-650 | SET | 1 | | |
| 1 | JC44-00178A | SMPS/HVPS-V1 | 1 | SA | 110V |
| 1 | JC44-00179A | SMPS/HVPS-V2 | 1 | SA | 220V |
| 2 | JC92-02203B | PBA-MAIN | 1 | SA | 650/SEE |
| 2 | JC92-02203J | PBA-MAIN | 1 | SA | 650/Others |
| 2 | JC92-02203K | PBA-MAIN | 1 | SA | 650P |
| 3 | JC90-00939B | CASSETTE | 1 | SA | |
| 4 | JC61-00601A | BRACKET-P-INLET | 1 | SA | |
| 5 | JC63-02410A | SHIELD-ENGINE | 1 | SNA | |
| 6 | JC39-00240B | HARNESS-ENGINE | 1 | SA | |
| 7 | JC91-00946A | FUSER_110V | 1 | SA | 650/650P/XAA |
| 7 | JC91-00946B | FUSER_110V | 1 | SA | 650/650P/TED |
| 7 | JC91-00945A | FUSER_220V | 1 | SA | 650/Others |
| 7 | JC91-00945B | FUSER_220V | 1 | SA | 650P/XSS |

| Drawer# | SEC_Code | Description | QT'y | Service | Remark |
|---|---|---|---|---|---|
| 8 | JC66-01218A | ROLLER-TRANSFER | 1 | SA | |
| 9 | JC93-00114B | FRAME-LOWER | 1 | SNA | |
| 10 | JC97-03702A | ADF FRAME-MAIN | 1 | SNA | 650P/Others |
| 10 | JC97-03702D | ADF FRAME-MAIN | 1 | SNA | 650P/TED |
| 10 | JC97-03702E | ADF FRAME-MAIN | 1 | SNA | 650P/ETS |
| 10 | JC97-03702F | ADF FRAME-MAIN | 1 | SNA | 650P/STS |
| 10 | JC97-03705A | ADF FRAME-MAIN | 1 | SNA | 650/Others |
| 10 | JC97-03705D | ADF FRAME-MAIN | 1 | SNA | 650/TED |
| 10 | JC97-03705G | ADF FRAME-MAIN | 1 | SNA | 650/SEE |
| 11 | JC95-01131A | COVER | 1 | SNA | 650P |
| 11 | JC95-01132A | COVER | 1 | SNA | 650 |
| 12 | - | CARTRIDGE-TONER | 1 | SNA | CRU |
| 13 | - | CBF-POWER CORD | 1 | SA | Refer to power cord |

www.drukparts.pl

## 2. COVER

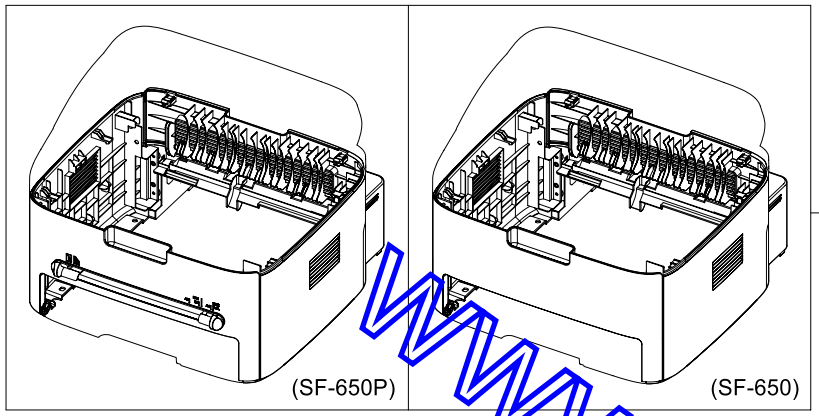


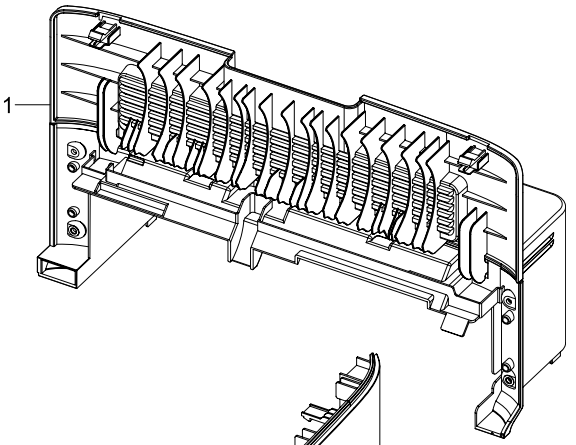


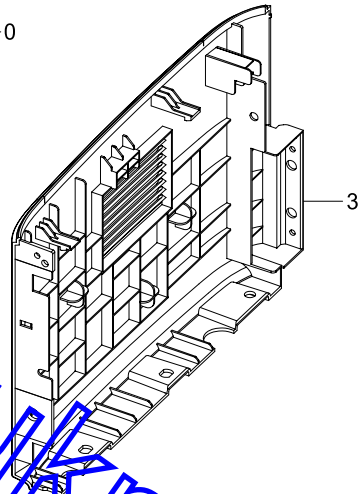


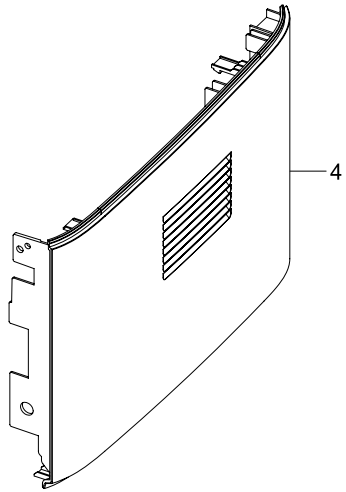


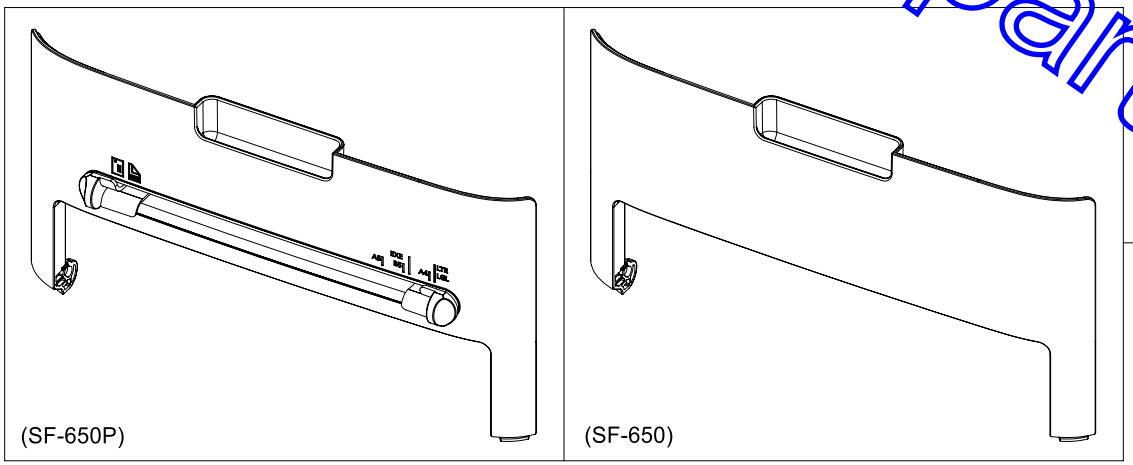


www.drukparts.pl

## COVER Parts List

SA : SERVICE AVAILABLE, SNA : SERVICE not AVAILABLE

| Drawer# | SEC_Code | Description | QT'y | Service | Remark |
|---|---|---|---|---|---|
| 0 | JC95-01131A | COVER | 1 | SNA | 650P |
| 0 | JC95-01132A | COVER | 1 | SNA | 650 |
| 1 | JC95-01153A | COVER-REAR | 1 | SA | |
| 2 | JC95-01019H | COVER-FRONT(650P) | 1 | SA | 650P |

| Drawer# | SEC_Code | Description | QT'y | Service | Remark |
|---|---|---|---|---|---|
| 2 | JC63-02480A | COVER-FRONT(650) | 1 | SA | 650 |
| 3 | JC63-02392A | COVER-LEFT | 1 | SNA | |
| 4 | JC63-02393A | COVER-RIGHT | 1 | SNA | |
| 5 | JC63-02477A | COVER-HARNESS | 1 | SNA | |

www.drukparts.pl

## 3. COVER FRONT

| 0 |
| --- |
| (SF-650P) |
| (SF-650) |

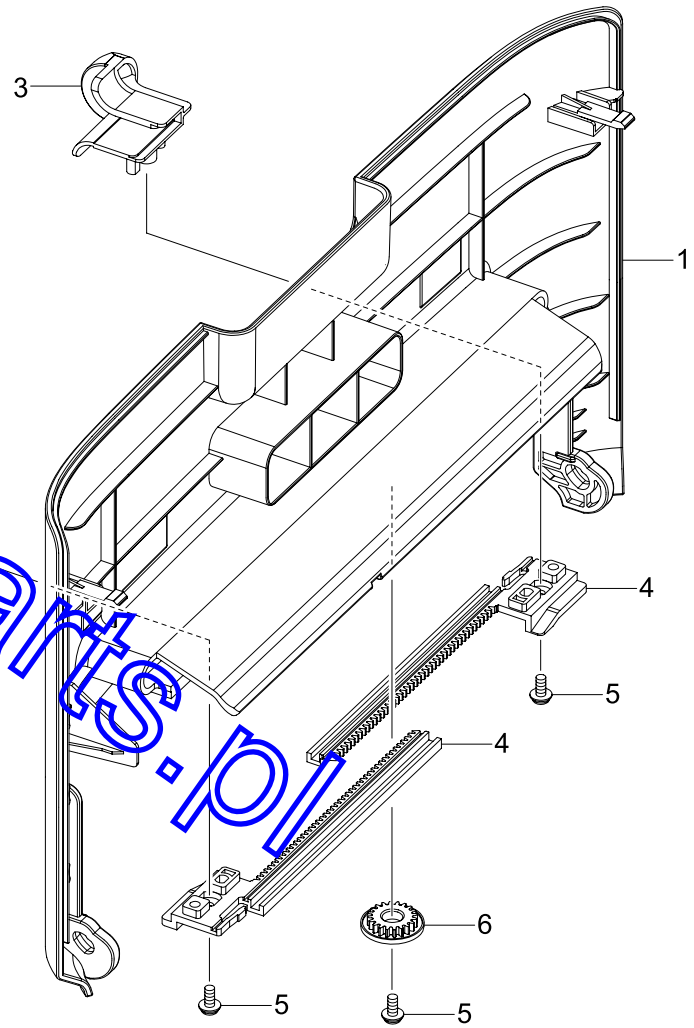


www.drukparts.pl

## COVER FRONT Parts List

SA : SERVICE AVAILABLE, SNA : SERVICE not AVAILABLE

| Drawer# | SEC_Code | Description | QT'y | Service | Remark |
|---|---|---|---|---|---|
| 0 | JC95-01019H | COVER-FRONT(650P) | 1 | SA | 650P |
| 0 | JC63-02480A | COVER-FRONT(650) | 1 | SA | 650 |
| 1 | JC95-01019H | COVER-FRONT(650P) | 1 | SA | Only_650P |
| 2 | JC70-00477G | ADJUST-MENUAL_R | 1 | SA | Only_650P |
| 3 | JC70-00476G | ADJUST-MENUAL_L | 1 | SA | Only_650P |
| 4 | JC70-00304A | ADJUST RACK-M-MANUAL | 2 | SA | Only_650P |
| 5 | 6003-000264 | SCREW-TAPTYPE | 3 | SNA | |
| 6 | JC66-00387A | GEAR-RACK_PINION | 1 | SA | Only_650P |

www.drukparts.pl

## 4. COVER REAR

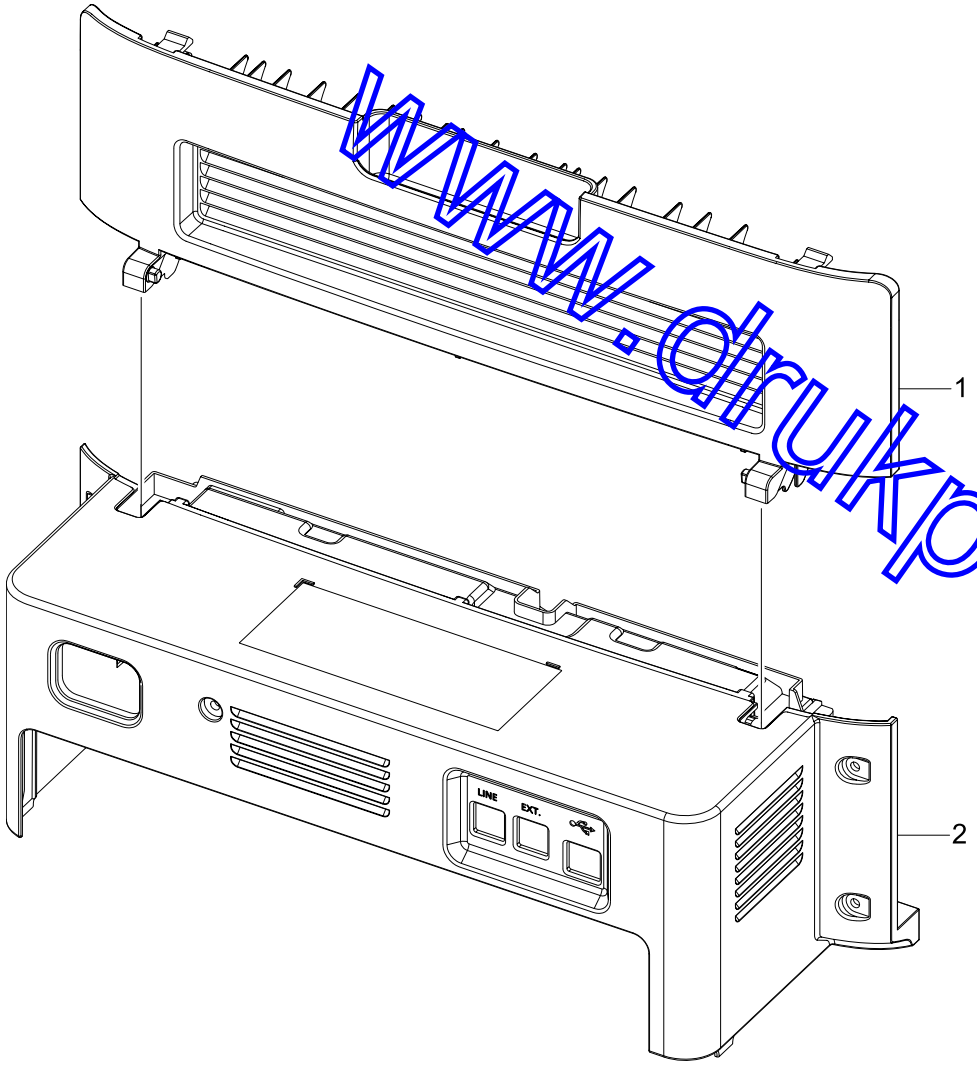


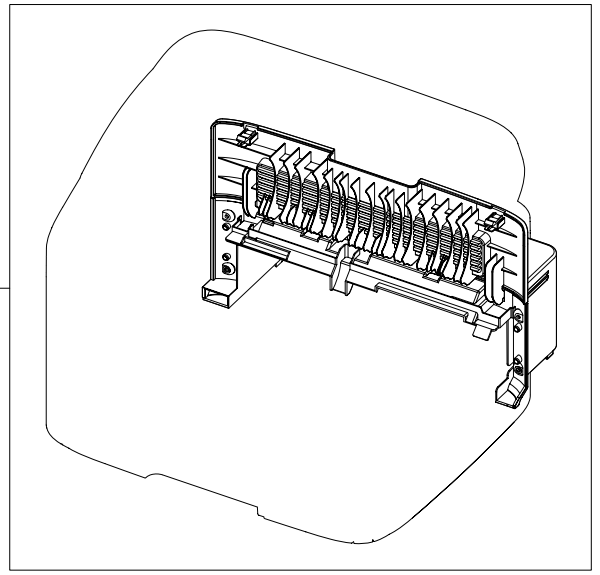


www.drukparts.pl

## COVER REAR Parts List

SA : SERVICE AVAILABLE, SNA : SERVICE not AVAILABLE

| Drawer# | SEC_Code | Description | QT'y | Service | Remark |
|---|---|---|---|---|---|
| 0 | JC95-01153A | COVER-REAR | 1 | SA | |
| 1 | JC63-02394A | COVER-REAR | 1 | SNA | |

| Drawer# | SEC_Code | Description | QT'y | Service | Remark |
|---|---|---|---|---|---|
| 2 | JC63-02469A | COVER-REAR DOWN | 1 | SA | |

www.drukparts.pl

## 5. ADF FRAME-MAIN_650P

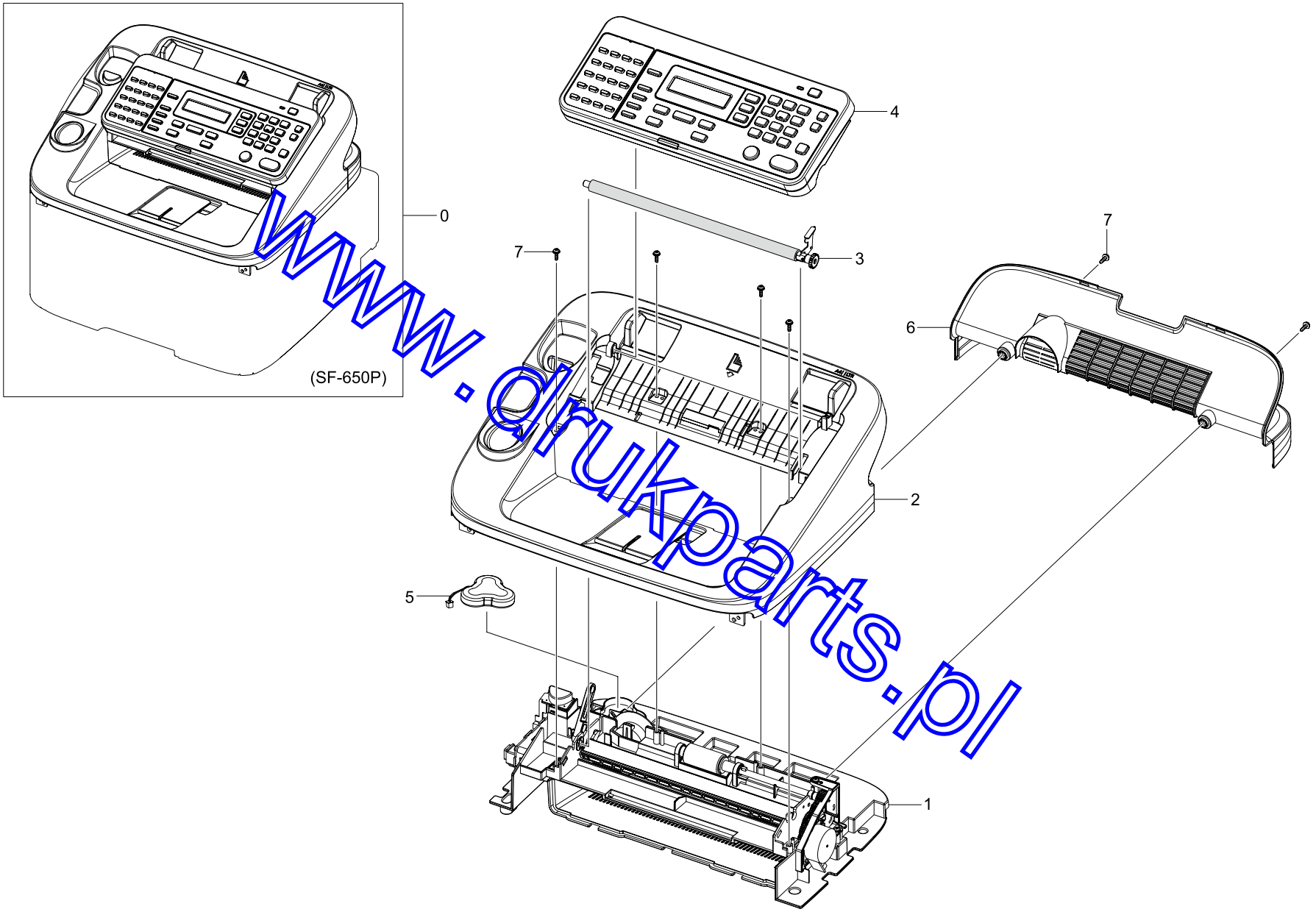


www.drukparts.pl

# ADF FRAME-MAIN_650P Parts List

SA : SERVICE AVAILABLE, SNA : SERVICE not AVAILABLE

| Drawer# | SEC_Code | Description | QT'y | Service | Remark |
|---|---|---|---|---|---|
| 0 | JC97-03702A | ADF FRAME-MAIN | 1 | SA | 650P/Others |
| 0 | JC97-03702D | ADF FRAME-MAIN | 1 | SA | 650P/TED |
| 0 | JC97-03702E | ADF FRAME-MAIN | 1 | SA | 650P/ETS |
| 0 | JC97-03702F | ADF FRAME-MAIN | 1 | SA | 650P/STS |
| 1 | JC97-03703A | ADF FRAME-LOWER | 1 | SNA | |
| 2 | JC95-01130A | COVER-TOP | 1 | SA | |
| 3 | JB97-01207A | MEA ETC-ROLLER WHITE | 1 | SA | |

| Drawer# | SEC_Code | Description | QT'y | Service | Remark |
|---|---|---|---|---|---|
| 4 | JC97-03704A | ADF FRAME-UPPER | 1 | SA | 650P/Others |
| 4 | JC97-03704D | ADF FRAME-UPPER | 1 | SA | 650P/TED |
| 4 | JC97-03704E | ADF FRAME-UPPER | 1 | SA | 650P/ETS |
| 4 | JC97-03704F | ADF FRAME-UPPER | 1 | SA | 650P/STS |
| 5 | 4302-001183 | BATTERY-NIH(2ND) | 1 | SA | |
| 6 | JC63-02474A | COVER-BACK | 1 | SA | |
| 7 | 6003-000196 | SCREW-TAPTYPE | 6 | SA | |

www.drukparts.pl

## 6. ADF FRAME-MAIN_650

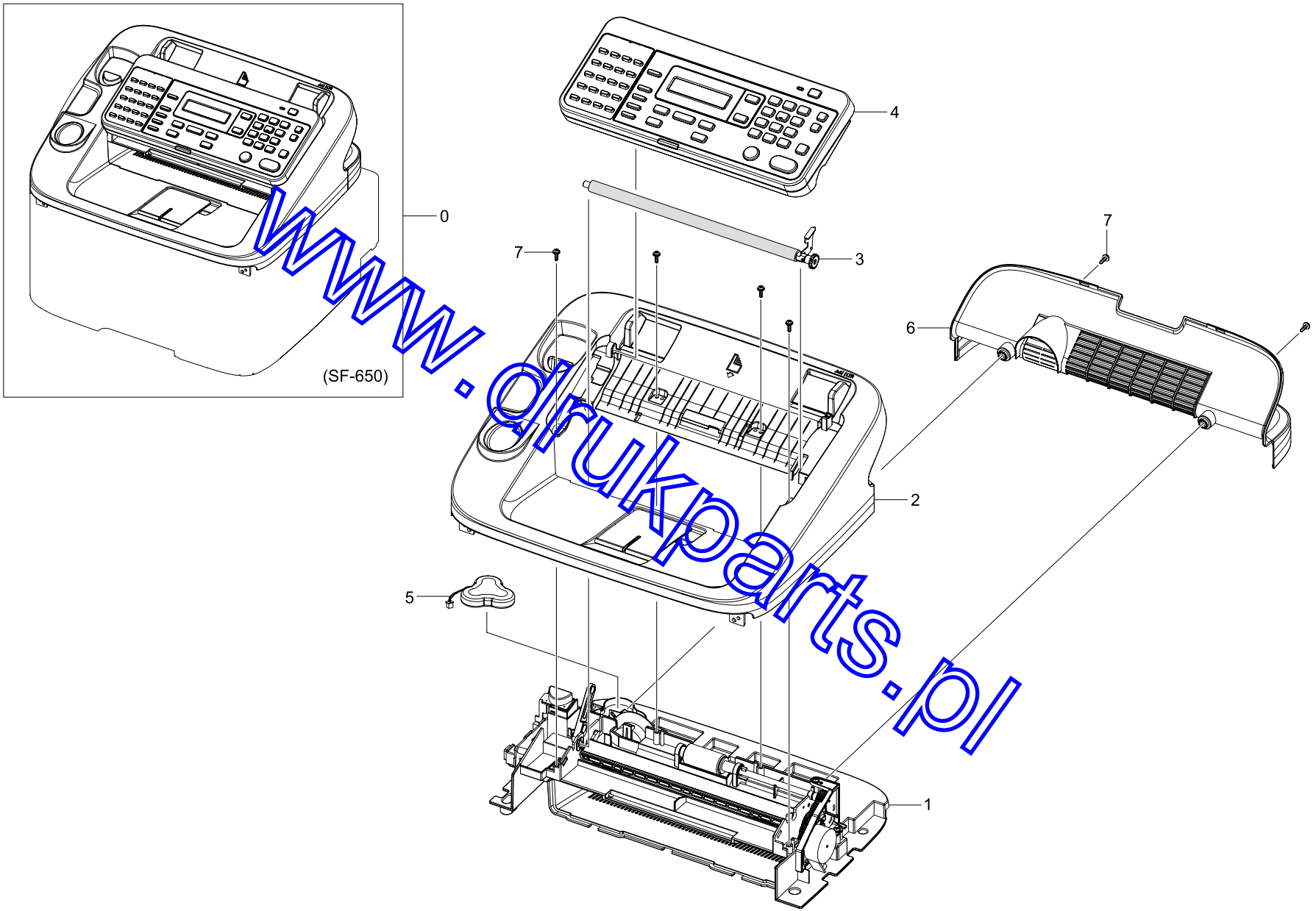


www.drukparts.pl

# ADF FRAME-MAIN_650 Parts List

SA : SERVICE AVAILABLE, SNA : SERVICE not AVAILABLE

| Drawer# | SEC_Code | Description | QT'y | Service | Remark |
|---|---|---|---|---|---|
| 0 | JC97-03705A | ADF FRAME-MAIN | 1 | SNA | 650/Others |
| 0 | JC97-03705D | ADF FRAME-MAIN | 1 | SNA | 650/TED |
| 0 | JC97-03705G | ADF FRAME-MAIN | 1 | SNA | 650/SEE |
| 1 | JC97-03703A | ADF FRAME-LOWER | 1 | SNA | |
| 2 | JC95-01130A | COVER-TOP | 1 | SA | |
| 3 | JB97-01207A | MEA ETC-ROLLER WHITE | 1 | SA | |

| Drawer# | SEC_Code | Description | QT'y | Service | Remark |
|---|---|---|---|---|---|
| 4 | JC97-03706A | ADF FRAME-UPPER | 1 | SA | 650/Others |
| 4 | JC97-03706D | ADF FRAME-UPPER | 1 | SA | 650/TED |
| 4 | JC97-03706G | ADF FRAME-UPPER | 1 | SA | 650/SEE |
| 5 | 4302-001183 | BATTERY-NIH(2ND) | 1 | SA | |
| 6 | JC63-02474A | COVER-BACK | 1 | SA | |
| 7 | 6003-000196 | SCREW-TAPTYPE | 6 | SA | |

www.drukparts.pl

## 7. COVER-TOP

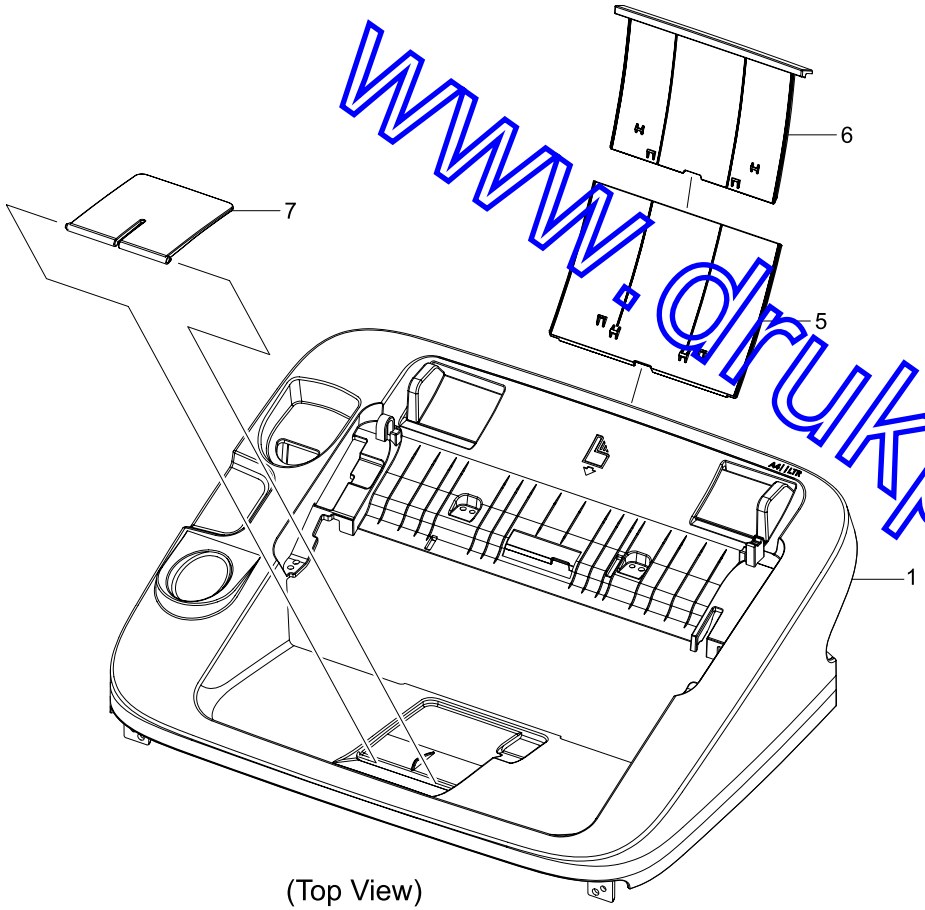


(Top View)

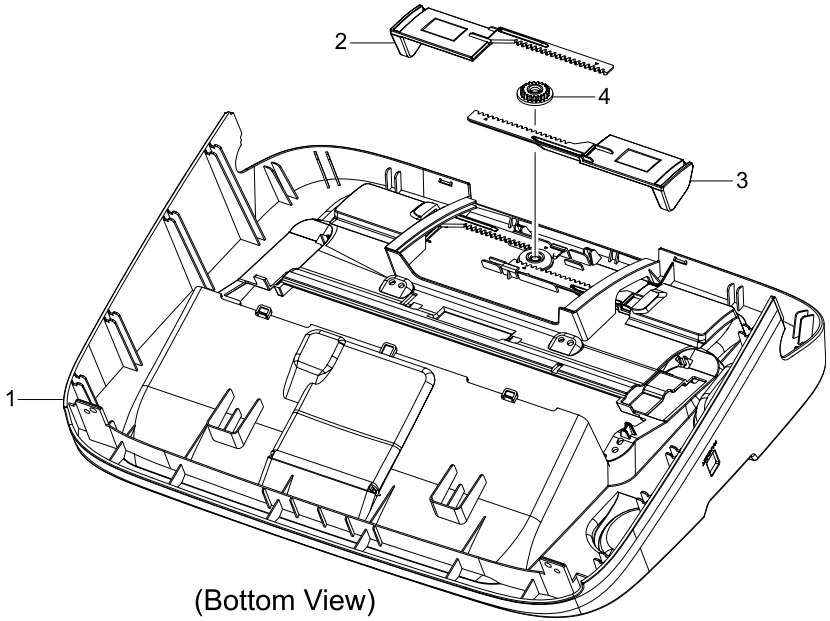


(Bottom View)

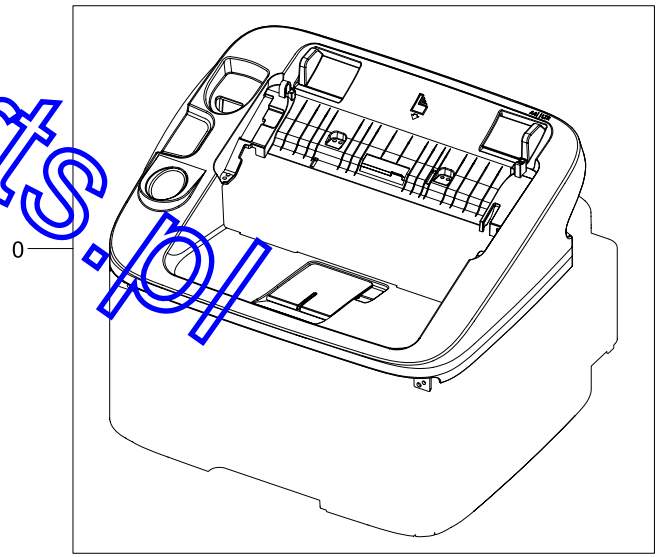


www.drukparts.pl

## COVER-TOP Parts List

SA : SERVICE AVAILABLE, SNA : SERVICE not AVAILABLE

| Drawer# | SEC_Code | Description | QT'y | Service | Remark |
|---|---|---|---|---|---|
| 0 | JC95-01130A | COVER-TOP | 1 | SA | |
| 1 | JC63-02471A | COVER-TOP | 1 | SA | |
| 2 | JC61-03501A | GUIDE-DOC R | 1 | SA | |
| 3 | JC61-03502A | GUIDE-DOC L | 1 | SA | |

| Drawer# | SEC_Code | Description | QT'y | Service | Remark |
|---|---|---|---|---|---|
| 4 | JG66-40003A | GEAR-PINION | 1 | SA | |
| 5 | JC63-02472A | TRAY-INPUT ADF 1 | 1 | SA | |
| 6 | JC63-02473A | TRAY-INPUT ADF 2 | 1 | SA | |
| 7 | JC63-00944D | COVER-M_STACKER_RX | 1 | SA | |

www.drukparts.pl

## 8. ADF STACKER-TX

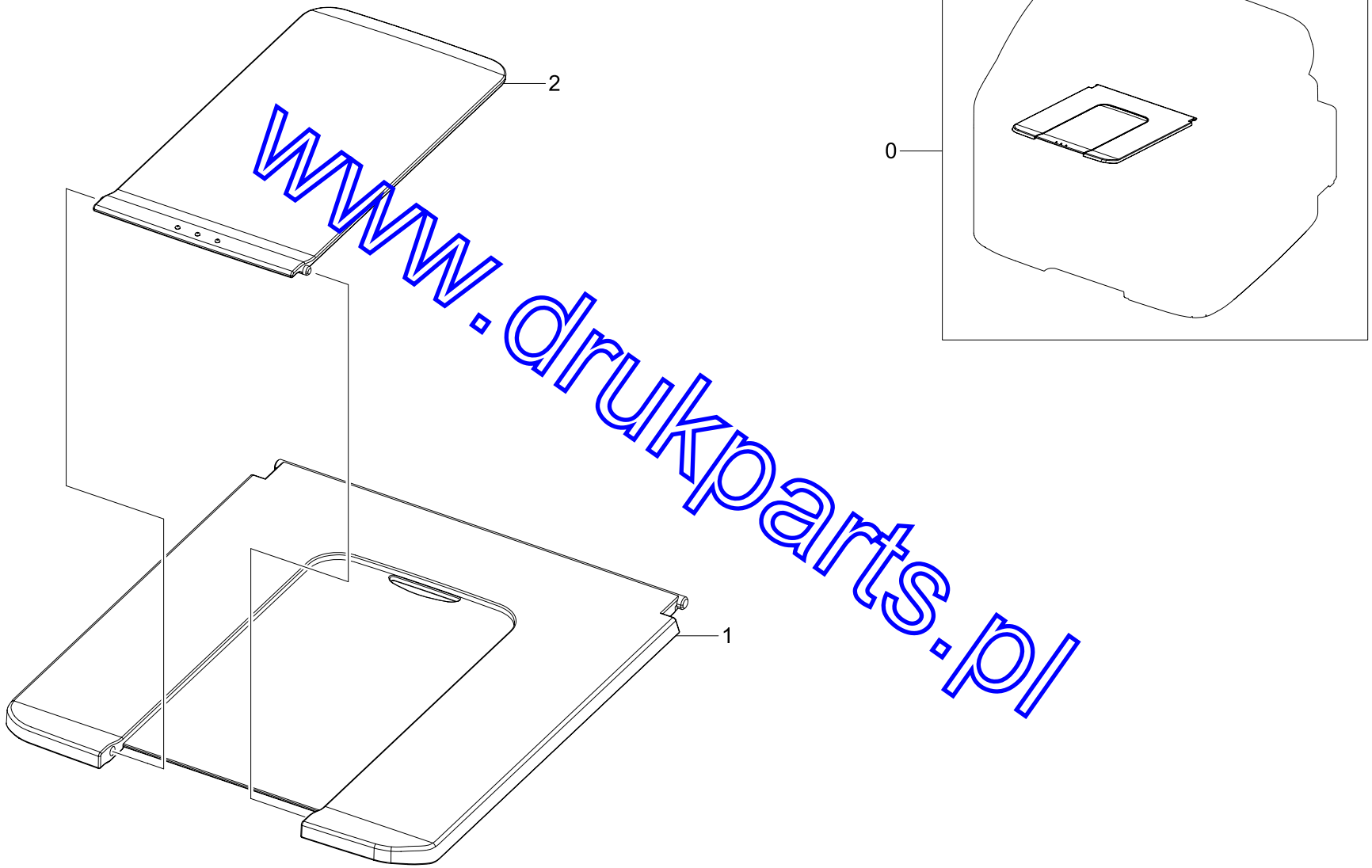


www.drukparts.pl

## ADF STACKER-TX Parts List

SA : SERVICE AVAILABLE, SNA : SERVICE not AVAILABLE

| Drawer# | SEC_Code | Description | QT'y | Service | Remark |
|---|---|---|---|---|---|
| 0 | JC97-03707A | ADF STACKER-TX | 1 | SA | |
| 1 | JC63-02478A | TRAY-OUTPUT ADF 1 | 1 | SA | |

| Drawer# | SEC_Code | Description | QT'y | Service | Remark |
|---|---|---|---|---|---|
| 2 | JC63-02479A | TRAY-OUTPUT ADF 2 | 1 | SA | |

www.drukparts.pl

## 9. HANDSET

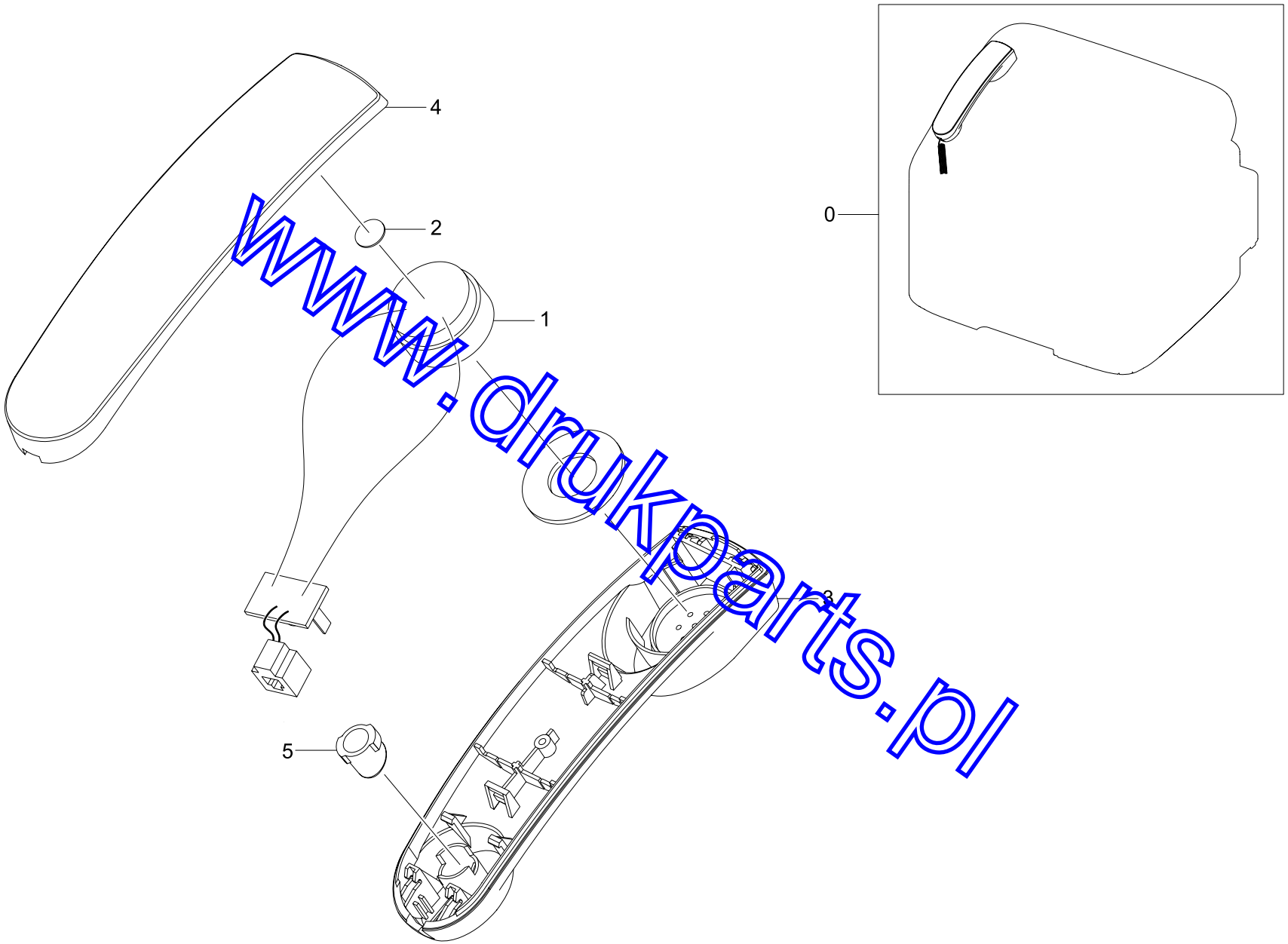


www.drukparts.pl

## HANDSET Parts List

SA : SERVICE AVAILABLE, SNA : SERVICE not AVAILABLE

| Drawer# | SEC_Code | Description | QT'y | Service | Remark |
|---|---|---|---|---|---|
| 0 | JC96-05367A | ELA UNIT-HANDSET | 1 | SA | |
| 1 | 3009-001028 | AUDIO-RECEIVER | 1 | SNA | |
| 2 | 6044-000138 | RING-OP | 1 | SNA | |
| 3 | JB63-00145Q | COVER-HANDSET LOWER | 1 | SNA | |
| 4 | JB63-00189J | COVER-HANDSET UPPER | 1 | SNA | |
| 5 | JF73-40501A | RMO-RUBBER MIC | 1 | SNA | |

www.drukparts.pl

# 10. ADF FRAME-LOWER

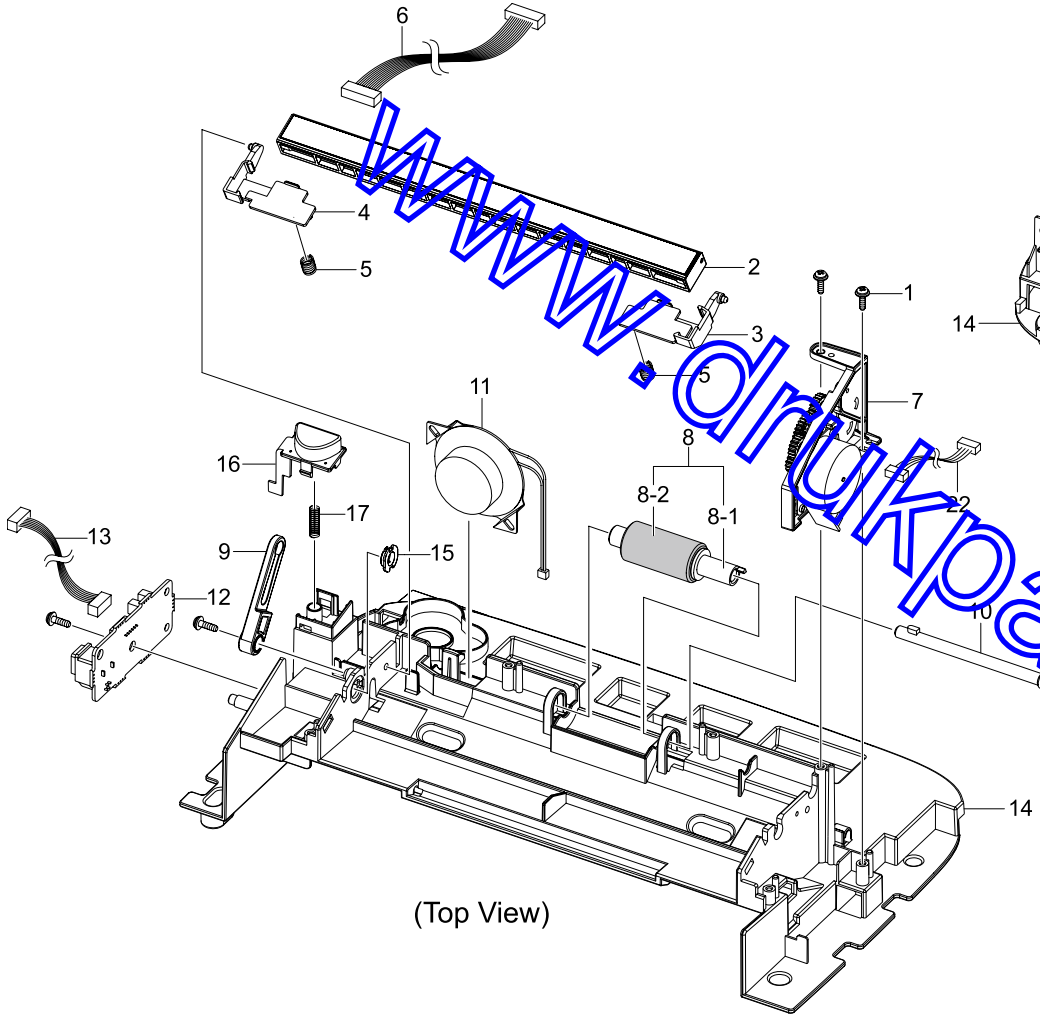


(Top View)

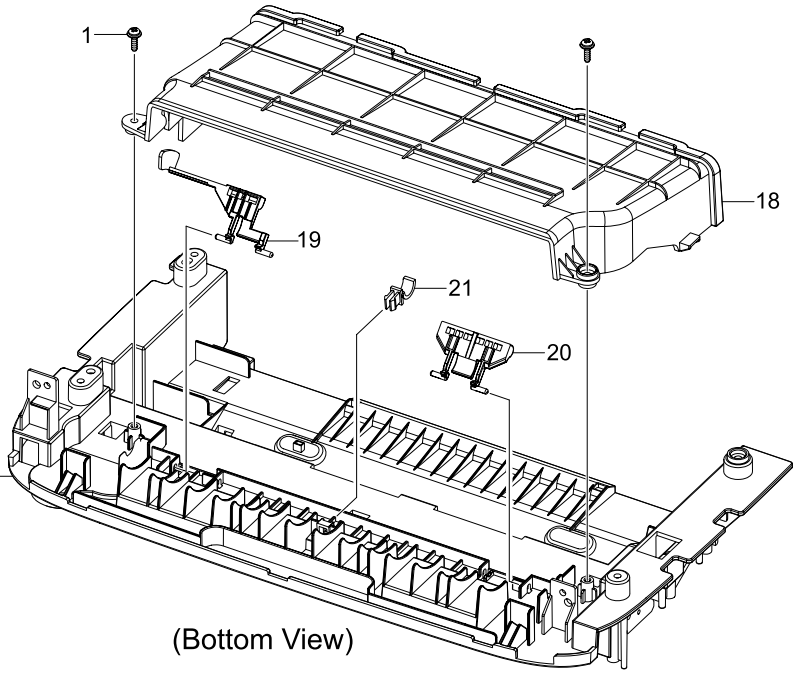


(Bottom View)

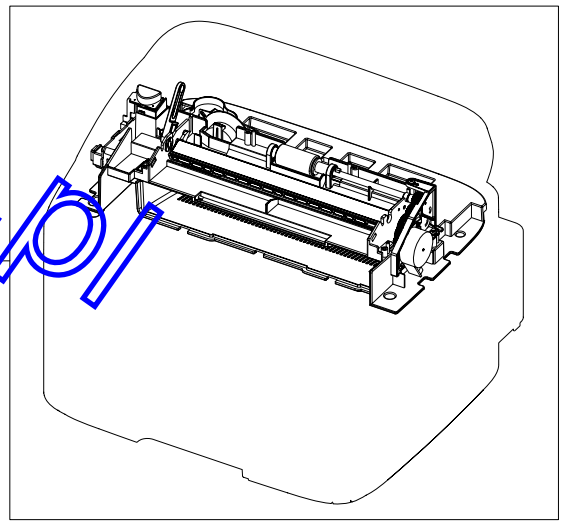


www.drukparts.pl

## ADF FRAME-LOWER Parts List

SA : SERVICE AVAILABLE, SNA : SERVICE not AVAILABLE

| Drawer# | SEC_Code | Description | QT'y | Service | Remark |
|---|---|---|---|---|---|
| 0 | JC97-03703A | ADF FRAME-LOWER | 1 | SNA | |
| 1 | 6003-000196 | SCREW-TAPTYPE | 6 | SA | |
| 2 | 0609-001360 | CONTACT IMAGE SENSOR | 1 | SA | |
| 3 | JB61-00137A | GUIDE-M_CIS R | 1 | SA | |
| 4 | JB61-00138A | GUIDE-M_CIS L | 1 | SA | |
| 5 | JB61-70938A | SPRING ETC-CIS(ATLAS) | 2 | SA | |
| 6 | JC39-01242A | HARNESS-CIS_MAIN | 1 | SNA | |
| 7 | JC93-00115A | DRIVE ADF | 1 | SA | |
| 8 | JB97-01620A | MEA UNIT-ROLLER ADF | 1 | SA | |
| 9 | JC66-00681A | LINK-M_SCAN OPEN | 1 | SNA | |
| 10 | JB66-00166A | SHAFT-M_DRIVER ADF | 1 | SA | |
| 11 | 3001-002262 | SPEAKER | 1 | SA | |

| Drawer# | SEC_Code | Description | QT'y | Service | Remark |
|---|---|---|---|---|---|
| 12 | JC92-02100A | PBA-HOOK | 1 | SA | |
| 13 | JC39-01245A | HARNESS-HOOK_MAIN | 1 | SNA | |
| 14 | JC61-03500A | FRAME-SCAN LOWER | 1 | SA | |
| 15 | JB61-00462A | BUSH-M_WHITE L | 1 | SNA | |
| 16 | JC64-00522A | BUTTON-HOOK | 1 | SA | |
| 17 | JC61-00022A | SPRING ETC-HOOK | 1 | SNA | |
| 18 | JC63-02470A | COVER-EXIT | 1 | SA | |
| 19 | JC61-03517A | STACKER-BIN_FULL | 1 | SNA | |
| 20 | JC72-01343A | PMO-SUB_M_STACKER | 1 | SC | |
| 21 | JC72-00387A | PMO-BUSHING_F/DOWN | 1 | SA | |
| 22 | JC39-01244A | HARNESS-SCAN MOTOR_MAIN | 1 | SNA | |

www.drukparts.pl

## 11. DRIVE-ADF

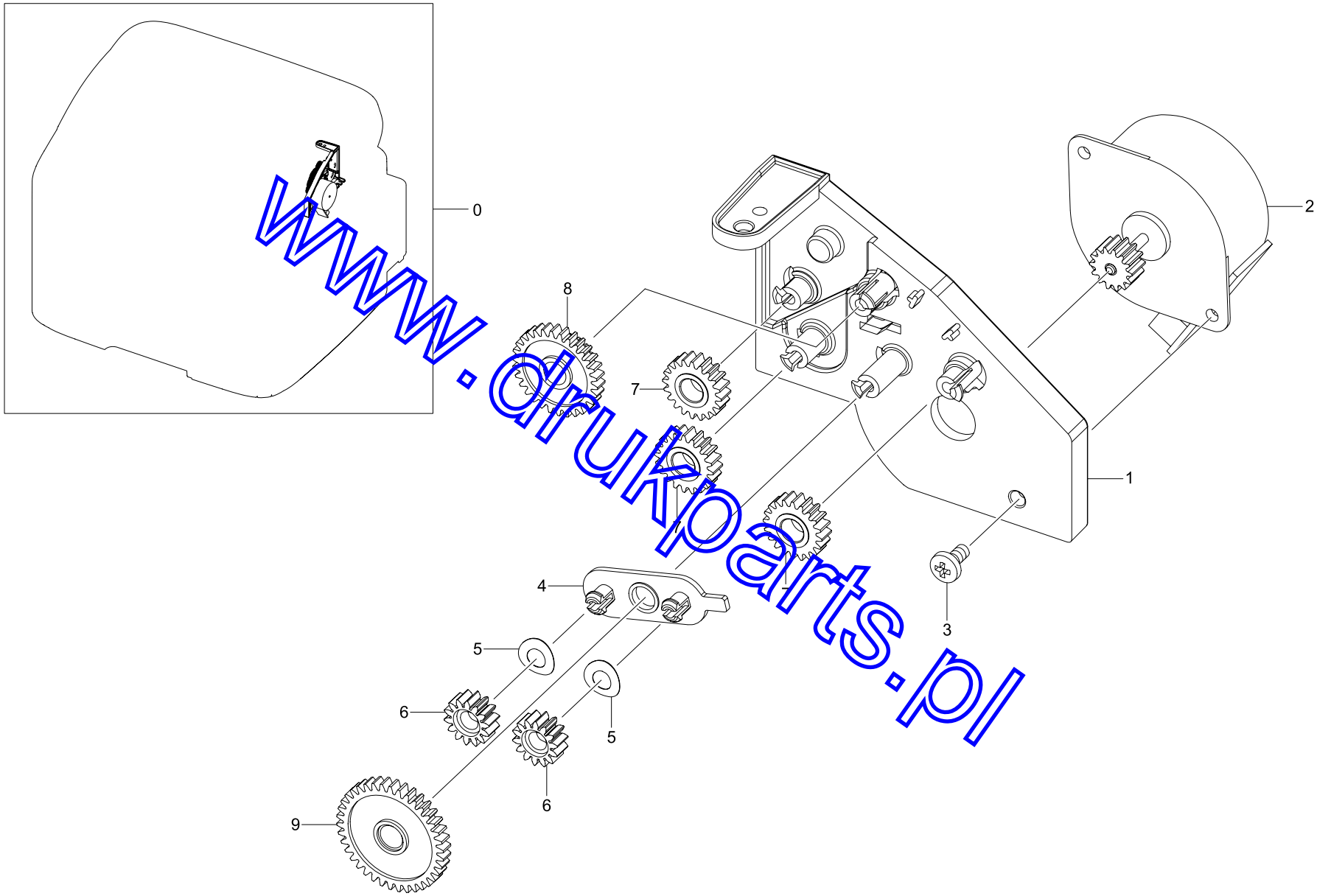


www.drukparts.pl

## DRIVE-ADF Parts List

SA : SERVICE AVAILABLE, SNA : SERVICE not AVAILABLE

| Drawer# | SEC_Code | Description | QT'y | Service | Remark |
|---|---|---|---|---|---|
| 0 | JC93-00115A | DRIVE ADF | 1 | SA | |
| 1 | JC61-03505A | BRACKET-TX | 1 | SA | |
| 2 | JC31-00110D | MOTOR STEP | 1 | SA | |
| 3 | 6003-000269 | SCREW-TAPTYPE | 1 | SA | |
| 4 | JB61-00140A | GUIDE-M_SWING | 1 | SNA | |

| Drawer# | SEC_Code | Description | QT'y | Service | Remark |
|---|---|---|---|---|---|
| 5 | JB61-70922A | SPRING ETC-CLUTCH | 2 | SA | |
| 6 | JF72-41293A | PMO-GEAR CLUTCH | 2 | SNA | |
| 7 | JB66-00006A | GEAR-IDLE | 3 | SNA | |
| 8 | JB66-00005A | GEAR-TRANS | 1 | SNA | |
| 9 | JC66-02430A | GEAR-DOUBLE(38/14) | 1 | SA | |

www.drukparts.pl

## 12. ADF FRAME-UPPER_650P

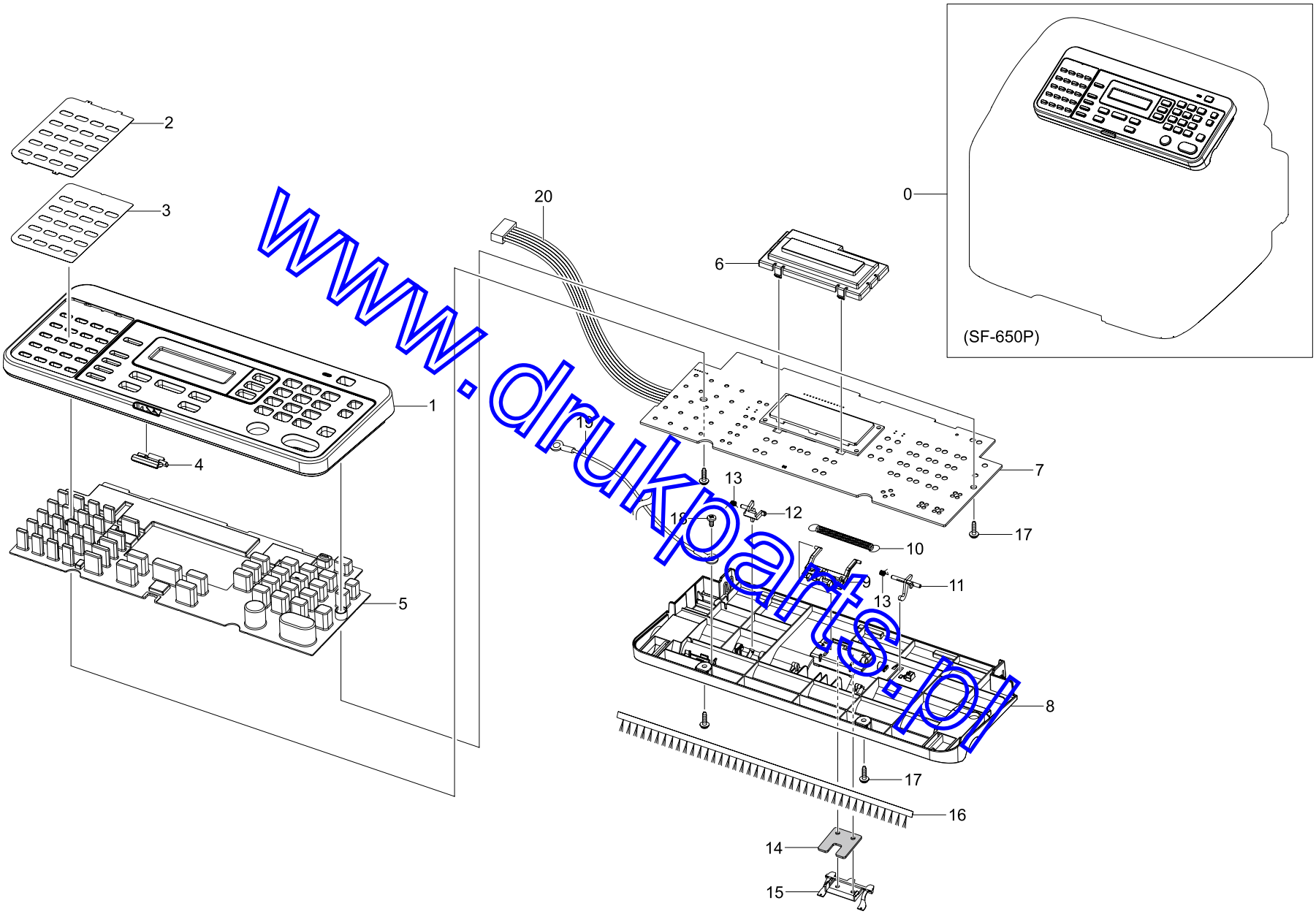


www.drukparts.pl

# ADF FRAME-UPPER_650P Parts List

SA : SERVICE AVAILABLE, SNA : SERVICE not AVAILABLE

| Drawer# | SEC_Code | Description | QT'y | Service | Remark |
|---|---|---|---|---|---|
| 0 | JC97-03704A | ADF FRAME-UPPER | 1 | SA | 650P/Others |
| 0 | JC97-03704D | ADF FRAME-UPPER | 1 | SA | 650P/TED |
| 0 | JC97-03704E | ADF FRAME-UPPER | 1 | SA | 650P/ETS |
| 0 | JC97-03704F | ADF FRAME-UPPER | 1 | SA | 650P/STS |
| 1 | JC63-02476A | COVER-OPE | 1 | SA | 650P/Others |
| 1 | JC63-02476D | COVER-OPE | 1 | SA | 650P/TED |
| 1 | JC63-02476E | COVER-OPE | 1 | SA | 650P/ETS |
| 1 | JC63-02476F | COVER-OPE | 1 | SA | 650P/STS |
| 2 | JC63-02508A | SHEET-ONETOUCH | 1 | SA | |
| 3 | JC68-02355A | LABEL-ONE TOUCH | 1 | SA | |
| 4 | JC67-00420A | LENS-STATUS | 1 | SA | |
| 5 | JC64-00526A | KEY-RUBBER_CONTACT(650P) | 1 | SA | |
| 6 | JC63-02475A | COVER-LCD | 1 | SA | |
| 7 | JC92-02202B | PBA-OPE | 1 | SA | |

| Drawer# | SEC_Code | Description | QT'y | Service | Remark |
|---|---|---|---|---|---|
| 8 | JC61-03503A | FRAME-UPPER | 1 | SA | |
| 9 | JB61-00352A | SUPPORT-M-ADF RIB | 1 | SNA | |
| 10 | JG70-40514A | ICT-SPRING COIL | 1 | SA | |
| 11 | JB66-00168A | LEVER-M_SENSOR DOC | 1 | SA | |
| 12 | JB66-00169A | LEVER-M_SENSOR SCAN | 1 | SA | |
| 13 | JB61-00107A | SPRING ETC-LEVER SENSOR | 2 | SA | |
| 14 | JB73-00100A | RUBBER-ADF | 1 | SA | |
| 15 | JB61-00143A | HOLDER-M_RUBBER | 1 | SA | |
| 16 | JC67-00055A | BRUSH-ANTISTATIC 531P | 1 | SA | |
| 17 | 6003-000196 | SCREW-TAPTYPE | 4 | SA | |
| 18 | 6003-000282 | SCREW-TAPTYPE | 1 | SNA | |
| 19 | JC39-01246A | HARNESS-GROUND | 1 | SNA | |
| 20 | JC39-01243A | HARNESS-OPE-MAIN | 1 | SNA | |
| 21 | JC63-02483A | SHEET-GUIDE_PAPER | 2 | SNA | |

www.drukparts.pl

## 13. ADF FRAME-UPPER_650

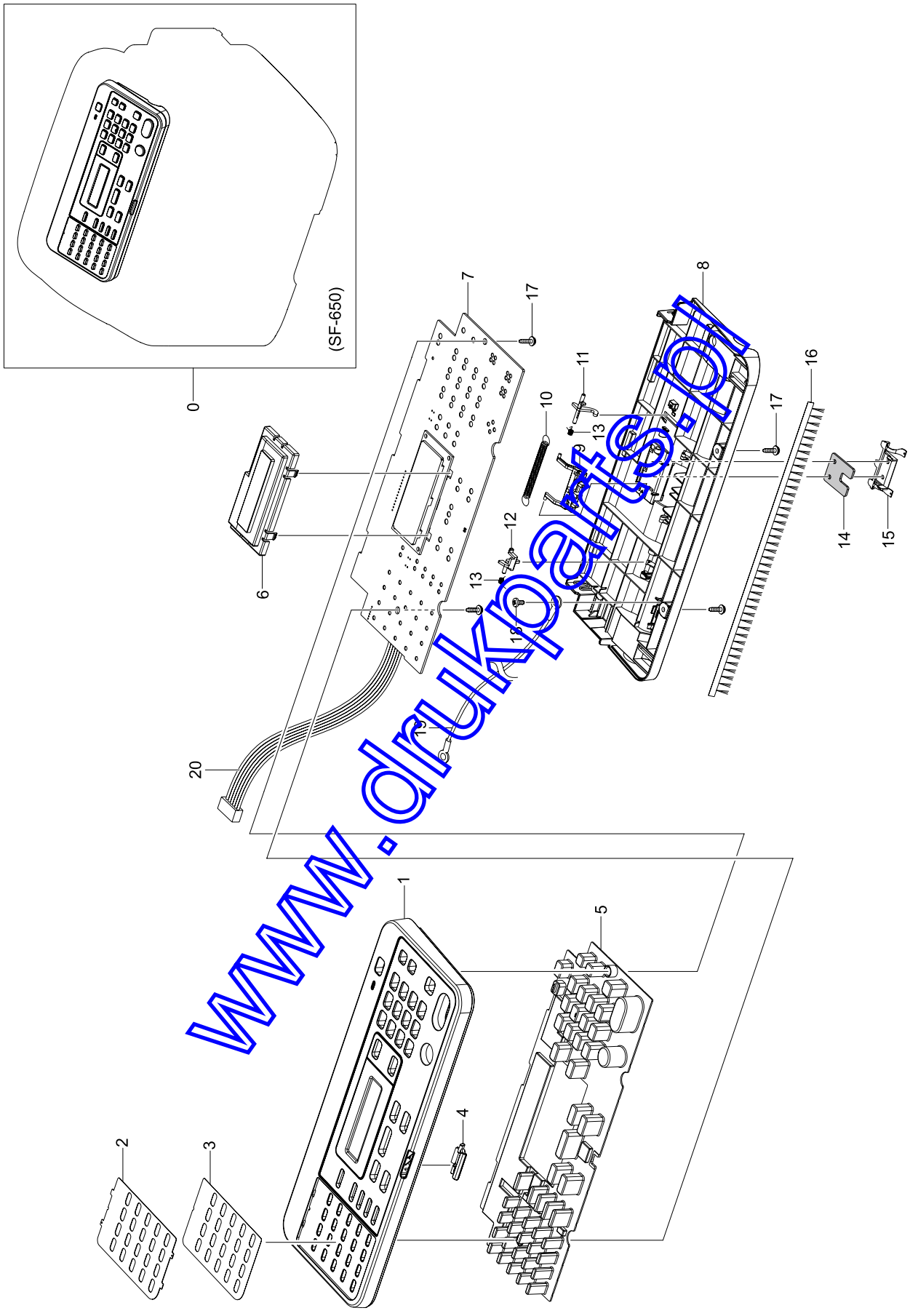


www.dukparts.pl

# ADF FRAME-UPPER_650 Parts List

SA : SERVICE AVAILABLE, SNA : SERVICE not AVAILABLE

| Drawer# | SEC_Code | Description | QT'y | Service | Remark |
|---|---|---|---|---|---|
| 0 | JC97-03706A | ADF FRAME-UPPER | 1 | SNA | 650/Others |
| 0 | JC97-03706D | ADF FRAME-UPPER | 1 | SNA | 650/TED |
| | JC97-03706G | ADF FRAME-UPPER | 1 | SNA | 650/SEE |
| 1 | JC63-02481A | COVER-OPE(650) | 1 | SA | 650/Others |
| 1 | JC63-02481D | COVER-OPE | 1 | SA | 650/TED |
| | JC63-02481G | COVER-OPE | 1 | SA | 650/SEE |
| 2 | JC63-02508A | SHEET-ONETOUCH | 1 | SA | |
| 3 | JC68-02355A | LABEL-ONE TOUCH | 1 | SA | |
| 4 | JC67-00420A | LENS-STATUS | 1 | SA | |
| 5 | JC64-00527A | KEY-RUBBER_CONTACT(650) | 1 | SNA | |
| 6 | JC63-02475A | COVER-LCD | 1 | SA | |
| 7 | JC92-02202A | PBA-OPE | 1 | SA | |
| 8 | JC61-03503A | FRAME-UPPER | 1 | SA | |

| Drawer# | SEC_Code | Description | QT'y | Service | Remark |
|---|---|---|---|---|---|
| 9 | JB61-00352A | SUPPORT-M-ADF RIB | 1 | SNA | |
| 10 | JG70-40514A | ICT-SPRING COIL | 1 | SA | |
| 11 | JB66-00168A | LEVER-M_SENSOR DOC | 1 | SA | |
| 12 | JB66-00169A | LEVER-M_SENSOR SCAN | 1 | SA | |
| 13 | JB61-00107A | SPRING ETC-LEVER SENSOR | 2 | SA | |
| 14 | JB73-00100A | RUBBER-ADF | 1 | SA | |
| 15 | JB61-00143A | HOLDER-M_RUBBER | 1 | SA | |
| 16 | JC67-00055A | BRUSH-ANTISTATIC 531P | 1 | SA | |
| 17 | 6003-000196 | SCREW-TAPTYPE | 4 | SA | |
| 18 | 6003-000282 | SCREW-TAPTYPE | 1 | SNA | |
| 19 | JC39-01246A | HARNESS-GROUND | 1 | SNA | |
| 20 | JC39-01243A | HARNESS-OPE-MAIN | 1 | SNA | |
| 21 | JC63-02483A | SHEET-GUIDE_PAPER | 2 | SNA | |

www.drukparts.pl

# 14. FRAME-LOWER 1

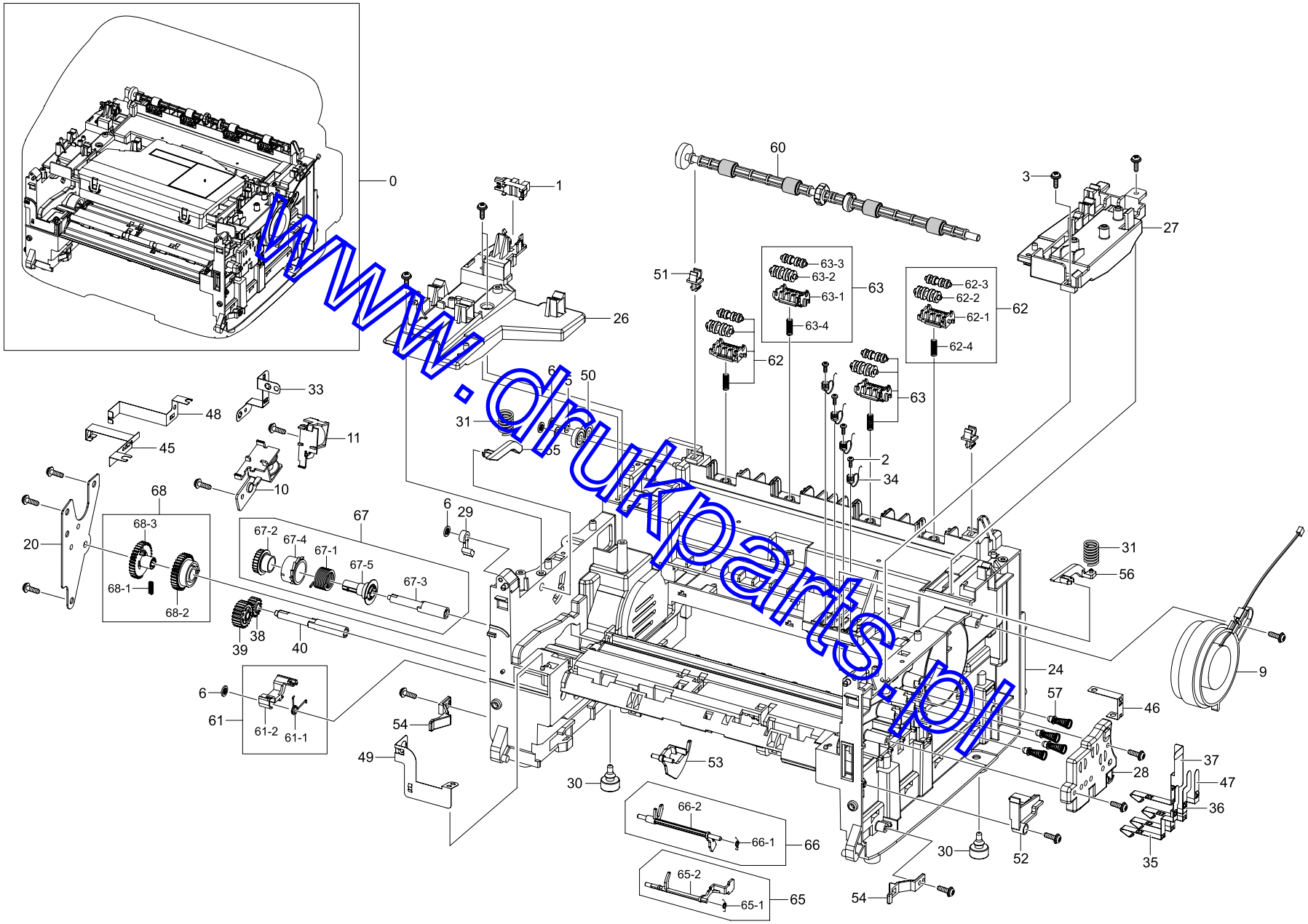


www.drukparts.pl

## FRAME-LOWER 2

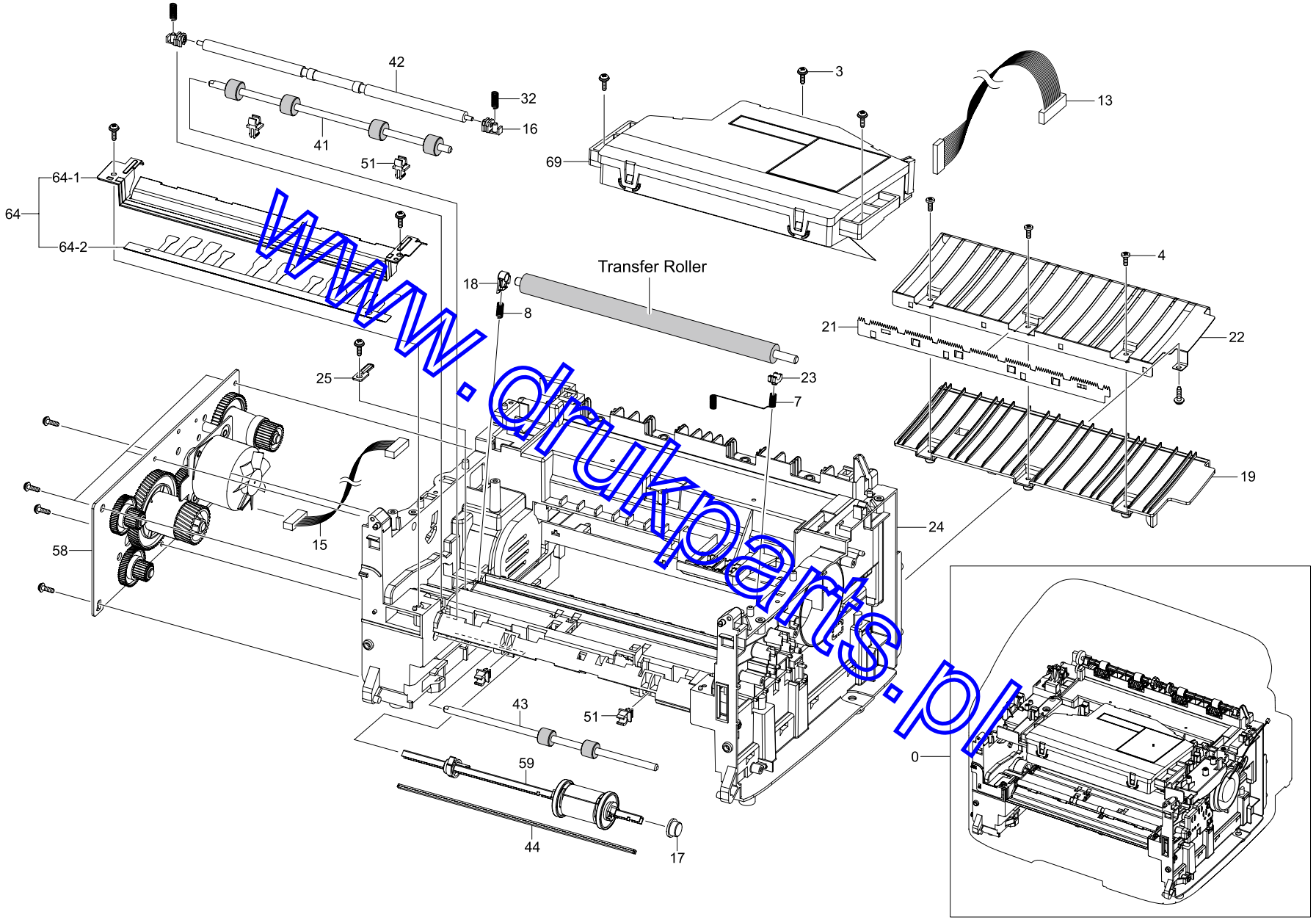


www.drukoants.pl

## FRAME-LOWER Parts List

SA : SERVICE AVAILABLE, SNA : SERVICE not AVAILABLE

| Drawer# | SEC_Code | Description | QT'y | Service | Remark |
|---|---|---|---|---|---|
| 0 | JC93-00114B | FRAME-LOWER | 1 | SNA | |
| 1 | 0604-001393 | PHOTO-INTERRUPTER | 1 | SA | |
| 2 | 6002-000308 | SCREW-TAPTYPE | 4 | SNA | |
| 3 | 6003-000196 | SCREW-TAPTYPE | 29 | SA | |
| 4 | 6003-000282 | SCREW-TAPTYPE | 2 | SNA | |
| 5 | 6031-001051 | WASHER-PLAIN | 2 | SNA | |
| 6 | 6044-000001 | RING-CS | 4 | SA | |
| 7 | 6107-001162 | SPRING-ETC | 1 | SA | |
| 8 | 6107-001370 | SPRING-CS | 1 | SA | |
| 9 | JC31-00087A | FAN-DC | 1 | SA | |
| 10 | JC33-00025B | SOLENOID-MANUAL | 1 | SA | |
| 11 | JC33-00026A | SOLENOID-PICK UP | 1 | SA | |
| 12 | JC39-01066A | HARNESS-BINFULL | 1 | SA | |
| 13 | JC39-01067A | HARNESS-LSU | 1 | SA | |
| 14 | JC39-01081A | HARNESS-CRUM | 1 | SA | |
| 15 | JC39-01083A | HARNESS-STEP_MOTOR_CLUTCH | 1 | SA | |
| 16 | JC61-00585A | BUSH-M-FEED IDLE | 2 | SA | |
| 17 | JC61-00587A | BUSH-M-PICK_UP R | 1 | SA | |
| 18 | JC61-00588A | BUSH-M-TR L | 1 | SA | |
| 19 | JC61-00594A | GUIDE-M-TR RIB | 1 | SA | |
| 20 | JC61-00602A | BRACKET-P-FEED | 1 | SA | |
| 21 | JC61-00604A | PLATE-P-SAW | 1 | SA | |
| 22 | JC61-00607A | GUIDE-P-TR | 1 | SA | |
| 23 | JC61-02468A | BUSH-TR_L | 1 | SA | |
| 24 | JC61-03322A | FRAME-BASE | 1 | SNA | |
| 25 | JC61-03440A | BRACKET-BUSH_TR L | 1 | SA | |
| 26 | JC61-03447A | FRAME-HOLDER_LSU_L | 1 | SNA | |
| 27 | JC61-03448A | FRAME-HOLDER_LSU_R | 1 | SNA | |
| 28 | JC61-03467A | HOUSING-TERMINAL | 1 | SNA | |
| 29 | JC61-03524A | STOPPER-LEVER_DR | 1 | SA | |
| 30 | JC61-40001A | FOOT-ML80 | 2 | SA | |

| Drawer# | SEC_Code | Description | QT'y | Service | Remark |
|---|---|---|---|---|---|
| 31 | JC61-70932A | SPRING ETC-GUIDE DEVE | 2 | SA | |
| 32 | JC61-70958A | SPRING ETC-TR | 2 | SA | |
| 33 | JC63-02411A | GROUND-FUSER | 1 | SNA | |
| 34 | JC65-00019A | TERMINAL-CRUM | 4 | SA | |
| 35 | JC65-00041A | TERMINAL-SUPPLY | 1 | SA | |
| 36 | JC65-00042A | TERMINAL-CON | 1 | SA | |
| 37 | JC65-00043A | TERMINAL-CR | 1 | SA | |
| 38 | JC66-00394A | GEAR-FEED 2 | 1 | SA | |
| 39 | JC66-00396A | GEAR-IDLE 23 | 1 | SA | |
| 40 | JC66-00398A | SHAFT-FEED | 1 | SA | |
| 41 | JC66-00526B | ROLLER-REGI | 1 | SA | |
| 42 | JC66-00527A | SHAFT-FEED IDLE | 1 | SA | |
| 43 | JC66-00598B | ROLLER-FEED | 1 | SA | |
| 44 | JC66-00720A | SHAFT-P-CORE | 2 | SA | |
| 45 | JC70-00308A | IPR-P-GROUND_DRIVE | 1 | SNA | |
| 46 | JC70-00311A | IPR-P-GROUND_TR | 1 | SNA | |
| 47 | JC70-00312A | IPR-P-TERMINAL CON | 1 | SA | |
| 48 | JC70-00335A | IPR-P_GROUND_DRIVE2 | 1 | SNA | |
| 49 | JC70-00458A | IPR-P-GROUND_GUIDE PAPER | 1 | SNA | |
| 50 | JC72-00143A | PMO-GEAR_EXIT_DRV16 | 2 | SNA | |
| 51 | JC72-00382B | PMO-BUSHING FEED | 7 | SA | |
| 52 | JC72-00974A | PMO-ACTUATOR CVR OPEN | 1 | SA | |
| 53 | JC72-00975A | PMO-ACTUATOR EMPTY | 1 | SA | |
| 54 | JC72-00983A | PMO-LOCKER CST | 2 | SA | |
| 55 | JC72-00984A | PMO-PLATE GUIDE DEVE_L | 1 | SA | |
| 56 | JC72-00985A | PMO-PLATE GUIDE DEVE_R | 1 | SA | |
| 57 | JC75-00049A | MEC-TERMINAL | 4 | SA | |
| 58 | JC93-00083B | DRIVE MAIN-BRACKET | 1 | SA | |
| 59 | JC93-00085A | FRAME BASE-PICK UP | 1 | SA | |
| 60 | JC93-00097B | FRAME-ROLLER EXIT FACE DOWN | 1 | SA | |
| 61 | JC93-00106A | FRAME-LEFT STOPPER PICK UP | 1 | SA | |

www.drukparts.ru

## FRAME-LOWER Parts List

SA : SERVICE AVAILABLE, SNA : SERVICE not AVAILABLE

| Drawer# | SEC_Code | Description | QT'y | Service | Remark |
|---|---|---|---|---|---|
| 61-1 | 6107-001170 | SPRING-TS | 1 | SA | |
| 61-2 | JC66-00377A | CAM-M-PICK_UP | 1 | SA | |
| 62 | JC93-00107C | FRAME-ROLLER DECURL | 2 | SA | |
| 62-1 | JC61-01172A | HOLDER-M-EXIT F/DOWN | 1 | SNA | |
| 62-2 | JC66-02551A | ROLLER-M-EXIT FR | 1 | SNA | |
| 62-3 | JC66-00824A | ROLLER-M-EXIT MAIN | 1 | SA | |
| 62-4 | 6107-002519 | SPRING-CS | 1 | SA | |
| 63 | JC93-00107D | FRAME-ROLLER DECURL | 2 | SA | |
| 63-1 | JC61-02702B | HOLDER-EXIT ROLLER | 1 | SA | |
| 63-2 | JC66-02551A | ROLLER-M-EXIT FR | 1 | SNA | |
| 63-3 | JC66-00824A | ROLLER-M-EXIT MAIN | 1 | SA | |
| 63-4 | 6107-002519 | SPRING-CS | 1 | SA | |
| 64 | JC93-00108A | FRAME-FRONT GUIDE PAPER | 1 | SA | |
| 64-1 | JC61-00718A | GUIDE-P-PAPER | 1 | SA | |
| 64-2 | JC63-02483A | SHEET-GUIDE_PAPER | 1 | SA | |
| 65 | JC93-00109A | FRAME-LOWER ACTUATOR MANUAL | 1 | SA | |
| 65-1 | 6107-001165 | SPRING-TS | 1 | SA | |

| Drawer# | SEC_Code | Description | QT'y | Service | Remark |
|---|---|---|---|---|---|
| 65-2 | JC72-00977A | PMO-ACTUATOR MANUAL | 1 | SA | |
| 66 | JC93-00110A | FRAME-LOWER ACTUATOR FEED | 1 | SA | |
| 66-1 | 6107-001164 | SPRING-TS | 1 | SA | |
| 66-2 | JC72-00976A | PMO-ACTUATOR FEED | 1 | SA | |
| 67 | JC97-01788A | MEA UNIT-CLUTCH | 1 | SA | |
| 67-1 | 6107-001171 | SPRING-TS | 1 | SA | |
| 67-2 | JC66-00393A | GEAR-FEED 1 | 1 | SA | |
| 67-3 | JC66-00398A | SHAFT-FEED | 1 | SA | |
| 67-4 | JC72-00978A | PMO-COLLAR_SPRING | 1 | SA | |
| 67-5 | JC72-00981A | PMO-HUB CLUTCH | 1 | SNA | |
| 68 | JC97-03141A | MEA UNIT-GEAR_PICKUP | 1 | SA | |
| 68-1 | 6107-001167 | SPRING-CS | 1 | SA | |
| 68-2 | JC72-00979A | PMO-GEAR PICK_UP A | 1 | SC | |
| 68-3 | JC72-00980A | PMO-GEAR PICK_UP B | 1 | SC | |
| 69 | JC97-03585A | LSU | 1 | SA | |
| 70 | JC66-01218A | ROLLER-TRANSFER | 1 | SA | |

www.drukparts.pl

## 15. FRAME BASE-PICK UP

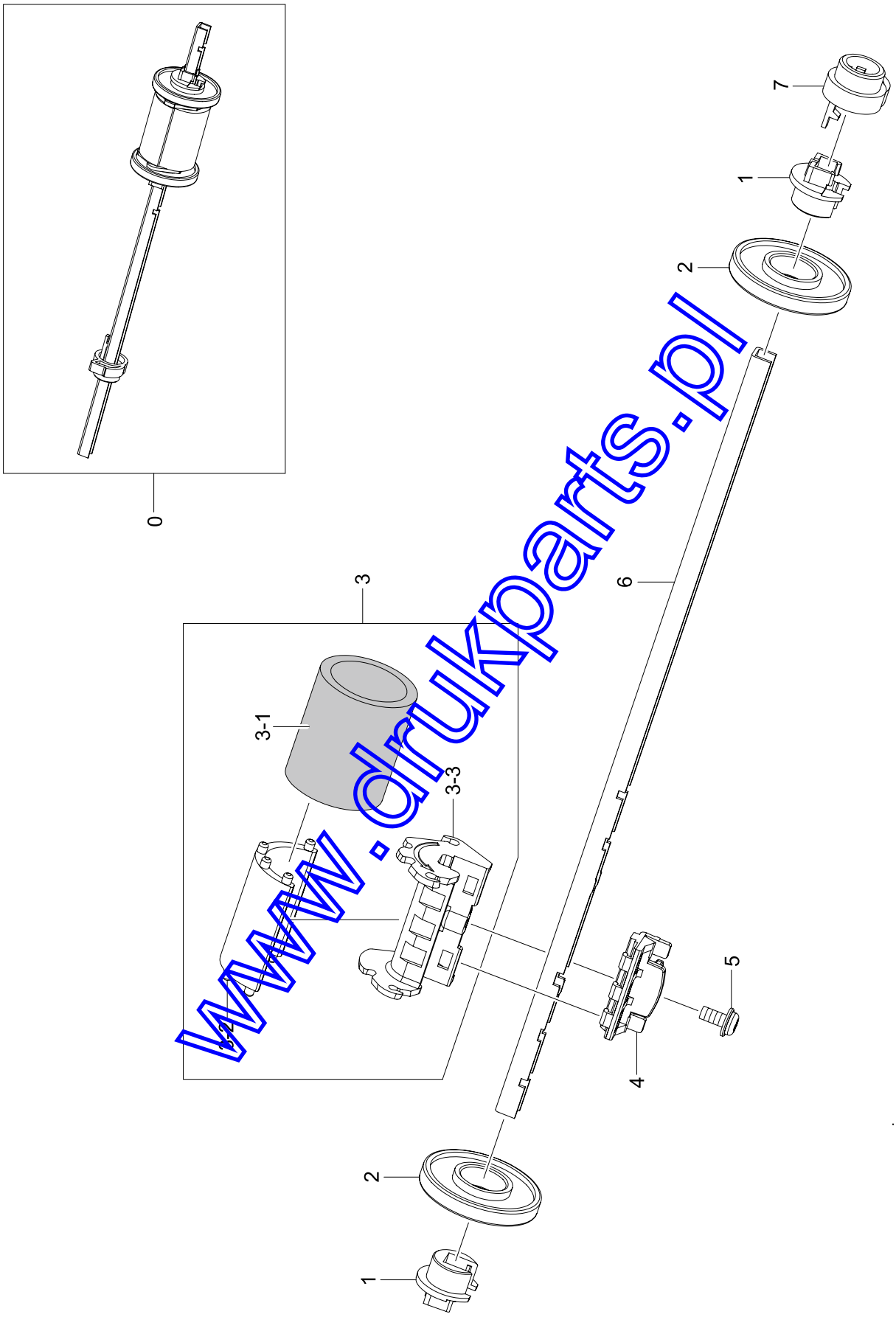


www.drukparts.pl

## FRAME BASE-PICK UP Parts List

SA : SERVICE AVAILABLE, SNA : SERVICE not AVAILABLE

| Drawer# | SEC_Code | Description | QT'y | Service | Remark |
|---|---|---|---|---|---|
| 0 | JC93-00085A | FRAME BASE-PICK UP | 1 | SA | |
| 1 | JC61-03477A | STOPPER-PICK_UP | 2 | SA | |
| 2 | JC72-00982A | PMO-IDLE PICK_UP | 2 | SA | |
| 3 | JC93-00087A | FRAME BASE-PICK UP RUBBER | 1 | SA | |
| 3-1 | JC73-00315A | RUBBER-PICK_UP | 1 | SA | |
| 3-2 | JC61-03514A | HOUSING-PICKUP_RUB | 1 | SA | |
| 3-3 | JC61-03435A | HOUSING-PICKUP | 1 | SA | |
| 4 | JC61-03485A | HOLDER-PICKUP | 1 | SA | |
| 5 | 6003-000264 | SCREW-TAPTYPE | 1 | SNA | |
| 6 | JC66-00399A | SHAFT-P-PICK_UP | 1 | SA | |
| 7 | JC61-00586A | BUSH-M-PICK_UP L | 1 | SNA | |

www.drukparts.pl

## 16. DRIVE MAIN-BRACKET

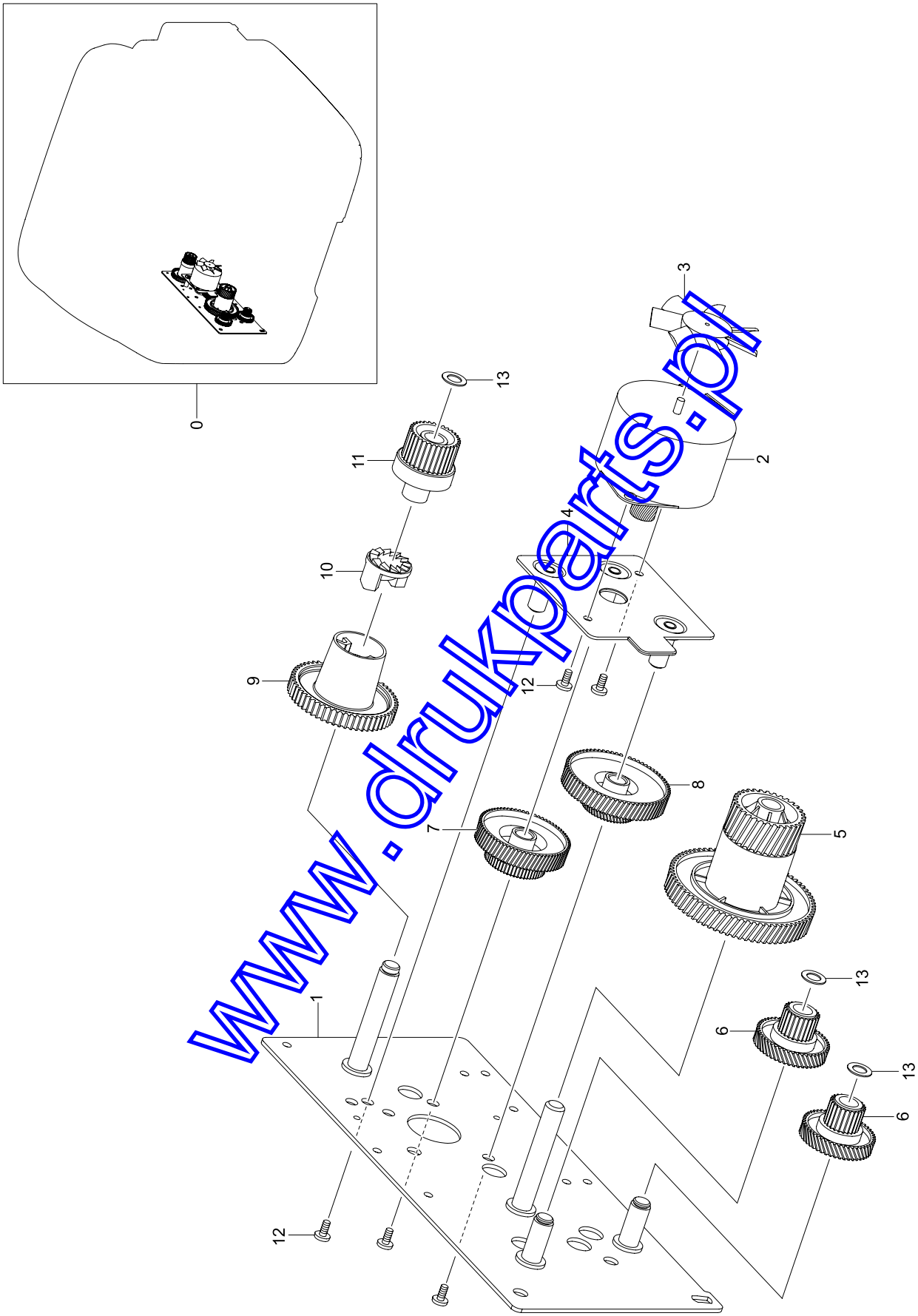


www.drukparts.pl

## DRIVE MAIN-BRACKET Parts List

SA : SERVICE AVAILABLE, SNA : SERVICE not AVAILABLE

| Drawer# | SEC_Code | Description | QT'y | Service | Remark |
|---|---|---|---|---|---|
| 0 | JC93-00083B | DRIVE MAIN-BRACKET | 1 | SA | |
| 1 | JC61-00598B | BRACKET-P-GEAR 1400 | 1 | SC | |
| 2 | JC31-00028D | MOTOR STEP | 1 | SA | |
| 3 | JC72-00825A | PMO-IMPELLER_DRV | 1 | SA | |
| 4 | JC61-03395A | BRACKET-MOTOR_STEP | 1 | SA | |
| 5 | JC66-02316A | GEAR-RDCN_OPC | 1 | SA | |
| 6 | JC66-00389A | GEAR-RDCN 54/18 | 2 | SA | |

| Drawer# | SEC_Code | Description | QT'y | Service | Remark |
|---|---|---|---|---|---|
| 7 | JC66-00392A | GEAR-RDCN 90/31 | 1 | SA | |
| 8 | JC66-00390A | GEAR-RDCN 103/41 | 1 | SA | |
| 9 | JC66-01203A | GEAR-DRV FUSER OUT | 1 | SA | |
| 10 | JC66-00340A | GEAR-HUB CLUTCH | 1 | SA | |
| 11 | JC66-01202A | GEAR-DRV FUSER IN | 1 | SA | |
| 12 | 6003-000269 | SCREW-TAPTYPE | 5 | SA | |
| 13 | 6031-000023 | WASHER-PLAIN | 3 | SA | |

www.drukparts.pl

## 17. FUSER

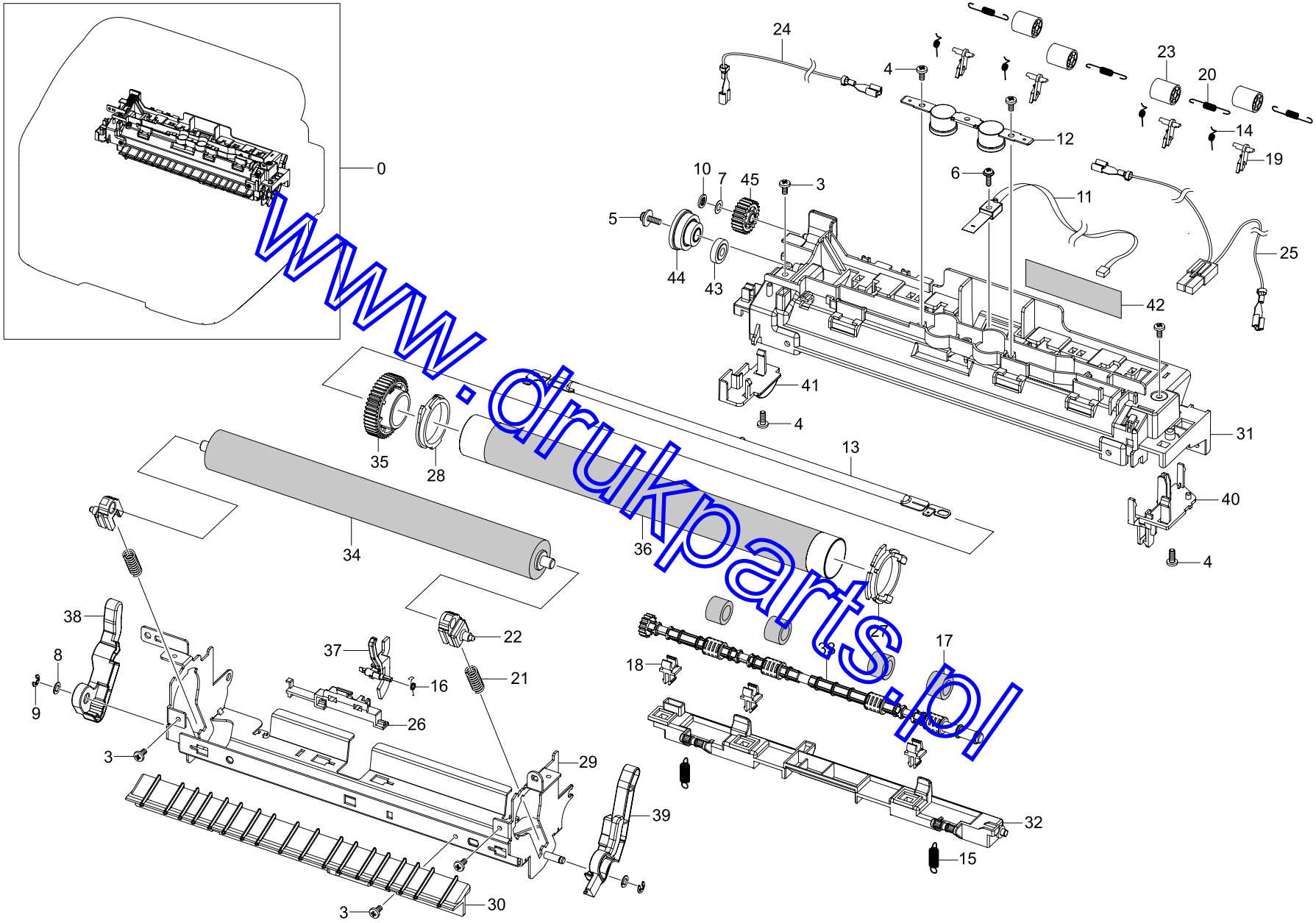


www.drukparts.pl

## FUSER Parts List

SA : SERVICE AVAILABLE, SNA : SERVICE not AVAILABLE

| Drawer# | SEC_Code | Description | QT'y | Service | Remark |
|---|---|---|---|---|---|
| 0 | JC91-00946A | FUSER_110V | 1 | SA | 650_650P/XAA |
| 0 | JC91-00946B | FUSER_110V | 1 | SA | 650_650P/TED |
| 0 | JC91-00945A | FUSER_220V | 1 | SA | Others |
| 0 | JC91-00945B | FUSER_220V | 1 | SA | 650P/XSS |
| 3 | 6003-000269 | SCREW-TAPTYPE | 5 | SA | |
| 4 | 6003-000282 | SCREW-TAPTYPE | 2 | SNA | |
| 5 | 6006-001078 | SCREW-TAPTYPE | 1 | SNA | |
| 6 | 6003-000196 | SCREW-TAPTYPE | 1 | SA | |
| 7 | 6031-001051 | WASHER-PLAIN | 1 | SNA | |
| 8 | 6031-001584 | WASHER-PLAIN | 2 | SA | |
| 9 | 6044-000159 | RING-C | 2 | SA | |
| 10 | 6044-000001 | RING-CS | 1 | SA | |
| 11 | 1404-001447 | THERMISTOR-NTC ASSY | 1 | SA | |
| 12 | 4712-001031 | THERMOSTAT | 1 | SA | |
| 13 | 4713-001211 | LAMP-HALOGEN | 1 | SA | 110V |
| 13 | 4713-001212 | LAMP-HALOGEN | 1 | SA | 220V |
| 14 | 6107-001800 | SPRING-TS | 4 | SA | |
| 15 | 6107-001802 | SPRING-ES | 2 | SA | |
| 16 | 6107-001165 | SPRING-TS | 1 | SA | |
| 17 | JC73-00017A | RMO-RUBBER_EXIT | 4 | SA | |
| 18 | JC72-00382A | PMO-BUSHING TX | 3 | SNA | |
| 19 | JC61-03685A | GUIDE-CLAW | 4 | SA | |
| 20 | JC61-70976A | SPRING ETC-FUSER EXIT | 4 | SA | |
| 21 | JC61-00056A | SPRING ETC-PR(7300) | 2 | SA | |
| 22 | JC61-03473A | BUSH-PR HIGH | 2 | SNA | |

| Drawer# | SEC_Code | Description | QT'y | Service | Remark |
|---|---|---|---|---|---|
| 23 | JC72-40361A | PMO-ROLLER_EXIT | 4 | SA | |
| 24 | JC39-01160A | HARNESS-FUSER JOINT | 1 | SA | |
| 25 | JC39-01082A | HARNESS-FUSER AC | 1 | SA | |
| 26 | JC61-00581A | HOLDER-ACTUATOR | 1 | SA | |
| 27 | JC61-00887A | BUSH-M-HR R_R2 | 1 | SA | |
| 28 | JC61-00888A | BUSH-M-HR L_R2 | 1 | SA | |
| 29 | JC61-03449A | FRAME-FUSER | 1 | SNA | |
| 30 | JC61-03450A | GUIDE-INPUT | 1 | SA | |
| 31 | JC63-02412A | COVER-FUSER | 1 | SNA | |
| 32 | JC63-02413A | COVER-FUSER DUMMY | 1 | SNA | |
| 33 | JC66-00380A | ROLLER-M-EXIT F/UP | 1 | SA | |
| 34 | JC66-00600A | ROLLER-PRESSURE | 1 | SA | 650_650P/Others |
| 34 | JC66-00600B | ROLLER-PRESSURE | 1 | SA | 650_650P/TED/XSS |
| 35 | JC66-01254A | GEAR-FUSER | 1 | SA | |
| 36 | JC66-01256A | ROLLER-HEAT | 1 | SA | 650_650P/Others |
| 36 | JC66-01256B | ROLLER-HEAT | 1 | SA | 650_650P/TED/XSS |
| 37 | JC66-02364A | ACTUATOR-EXIT | 1 | SA | |
| 38 | JC66-02365A | LEVER-LINK JAM L | 1 | SA | |
| 39 | JC66-02366A | LEVER-LINK JAM R | 1 | SA | |
| 40 | JC67-00414A | CAP-FUSER LAMP R | 1 | SA | |
| 41 | JC67-00415A | CAP-FUSER LAMP L | 1 | SA | |
| 42 | - | LABEL-CAUTION | 1 | SNA | |
| 43 | JC72-00143A | PMO-GEAR_EXIT_DRV16 | 1 | SNA | |
| 44 | JC66-02317A | GEAR-RDCN_EXIT | 1 | SA | |
| 45 | JC66-00396A | GEAR-IDLE 23 | 1 | SA | |

www.drukparts.pl

## 18. CASSETTE

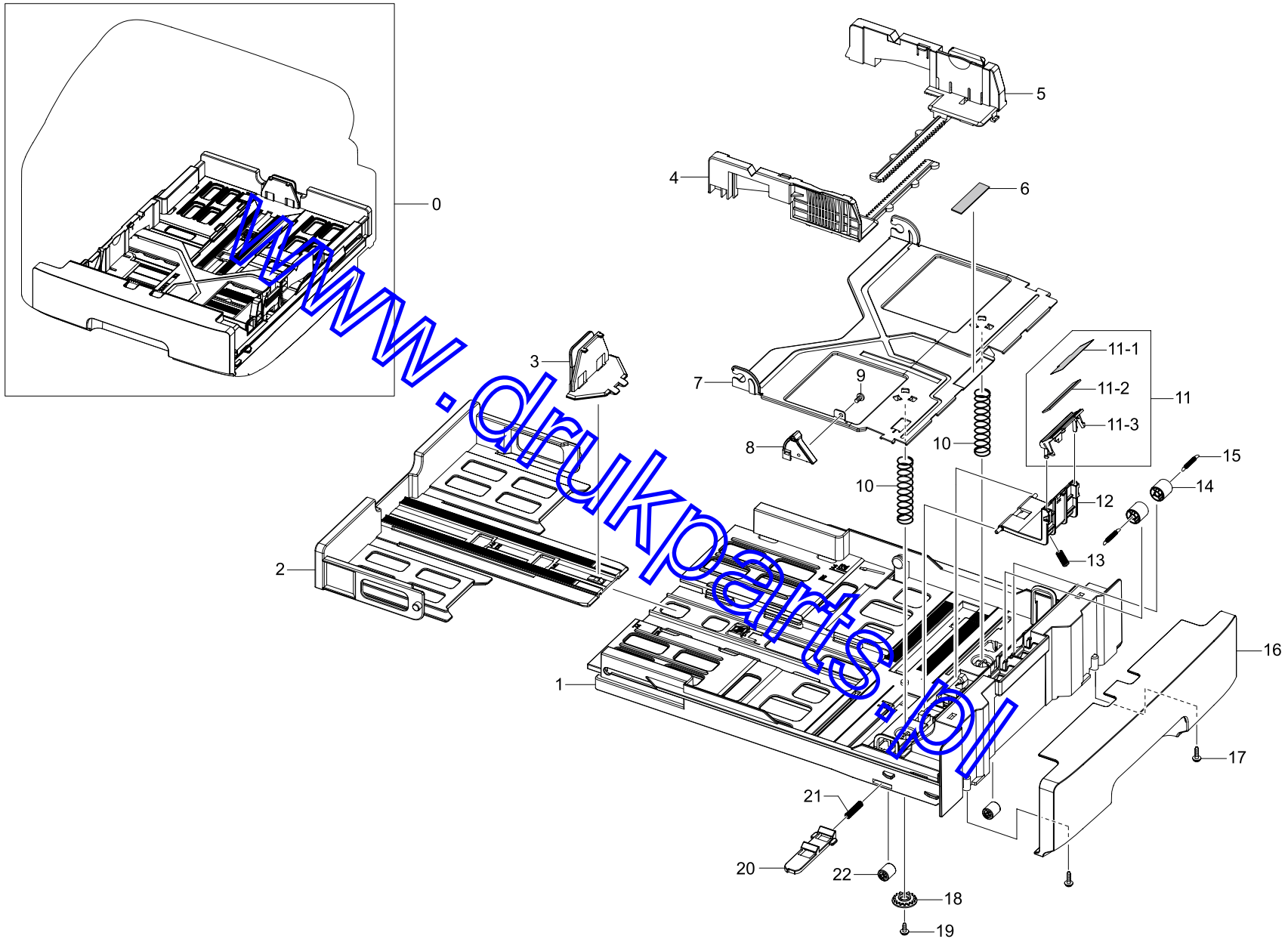


www.drukparts.pl

## CASSETTE Parts List

SA : SERVICE AVAILABLE, SNA : SERVICE not AVAILABLE

| Drawer# | SEC_Code | Description | QT'y | Service | Remark |
|---|---|---|---|---|---|
| 0 | JC90-00939B | CASSETTE | 1 | SA | |
| 1 | JC61-03343A | FRAME-CASSETTE | 1 | SNA | |
| 2 | JC61-03341B | GUIDE-EXTENSION CST | 1 | SNA | |
| 3 | JC72-00971A | PMO-EXTENSION SMALL | 1 | SA | |
| 4 | JC70-00300A | ADJUST-M-CASSETTE_L | 1 | SA | |
| 5 | JC70-00301A | ADJUST-M-CASSETTE_R | 1 | SA | |
| 6 | JC73-00141A | RPR-PAD CASSETTE | 1 | SA | |
| 7 | JC61-00603A | PLATE-P-KNOCK UP | 1 | SNA | |
| 8 | JC66-00719A | CAM-M-KNOCK UP | 1 | SA | |
| 9 | 6003-000261 | SCREW-TAPTYPE | 1 | SNA | |
| 10 | 6107-001166 | SPRING-CS | 2 | SA | |
| 11 | JC90-00941A | CASSETTE-HOLDER PAD | 1 | SA | |
| 11-1 | JC63-02592A | SHEET-HOLDER PAD | 1 | SA | |

| Drawer# | SEC_Code | Description | QT'y | Service | Remark |
|---|---|---|---|---|---|
| 11-2 | JC73-00140A | RPR-FRICTION PAD | 1 | SA | |
| 11-3 | JC61-03344A | HOLDER-PAD | 1 | SA | |
| 12 | JC61-01978A | HOUSING-HOLDER PAD | 1 | SA | |
| 13 | JC61-70911A | SPRING ETC-EXIT ROLL FD | 1 | SA | |
| 14 | JC66-00529A | ROLLER-M-IDLE FEED | 2 | SA | |
| 15 | 6107-001047 | SPRING-ES | 2 | SA | |
| 16 | JC63-02341B | COVER-CASSETTE | 1 | SNA | |
| 17 | 6003-000196 | SCREW-TAPTYPE | 2 | SA | |
| 18 | JG66-40003A | GEAR-PINION | 1 | SA | |
| 19 | 6003-000264 | SCREW-TAPTYPE | 1 | SNA | |
| 20 | JC72-00972A | PMO-PLATE_LOCKER | 1 | SA | |
| 21 | JG61-70531A | SPRING ETC-LOCKER,PLATE | 1 | SA | |
| 22 | JC72-40981A | PMO-ROLLER UPPER DP | 2 | SA | |

www.drukparts.pl