5. Exploded View & Parts List

5-1. Main Exploded View & Parts List..... page(5-2)
5-2. Platen Ass'y Exploded View & Parts List..... page(5-5)
5-3. ADF ASS'Y Exploded View & Parts List..... page(5-9)
5-4. Side Cover Ass'y Exploded View & Parts List..... page(5-12)
5-5. Cassette Ass'y Exploded View & Parts List..... page(5-14)
5-6. Exit Ass'y Exploded View & Parts List..... page(5-16)
5-7. Feeder Ass'y Exploded View & Parts List..... page(5-18)
5-8. MP Ass'y Exploded View & Parts List..... page(5-20)
5-9. Base Frame Exploded View & Parts List..... page(5-22)
5-10.Pick-up Ass'y Exploded View & Parts List..... page(5-24)
5-11. Drive Ass'y Exploded View & Parts List..... page(5-26)
5-12. Main Frame Ass'y Exploded View & Parts List..... page(5-28)
5-13. FuserAss'y Exploded View & Parts List..... page(5-30)
5-14. Screw..... page(5-32)

- Deal drawings and service parts are declared for the items with higher rate of inferiority and replaceable in the level of service description only.
- If inferiority occurs, you can replace the parts by the unit declared in deal drawings and service items.

Way to observe Part Code & Description

Part code and Description is quoted and controlled by determined standard. Refer to this determined standard, it will help with ordering Part.

- **There are two kinds of Part code inscription type.**

●●●●–●●●●●●	ex) 2007-007961	R-CHIP
■■●●–●●●●●■ (It shows part specific)	ex) JB96-01268A	ELA UNIT-COVER TOP

(● : figure, ■ : character (alphabet))

Type 1 : Controlled by Company : It can be commonly used for all kinds of product SEC produce. Mostly, electronics Parts.

Type 2 : Controlled by Division : It is used or one produce. Mostly, Mostly, mechanical Parts.

- **A/S privately used part :** It is only used for A/S .
- **Ass'y part :** Assembled by more than 2 Parts. If necessary part is not A/S Part, Ass'y part including necessary par can be used. It is shown in the diagram and drawing of SVC manual.

- Ass'y part and A/S privately used Part is distinguished by part Code and Description. The are inscription type 2. It is recognized by Part character and front side of description.

DIVISION	PART CODE	DESCRIPTION
A/S Private	**81-****** (JB81-00039A)	AS-***** (AS-USE)
ASS'Y Part	**75-****** (JB75-00068A)	MEC-***** (MEC-CHUTE)
ASS'Y Part	**92-****** (JB92-01131A)	PBA ****** (PBA MAIN-CONTROLLER)
ASS'Y Part	**97-****** (JB97-01089A)	MEA ****** (MEA UNIT-PULLEY IDLE)

www.drukparts.pl

5-1. Main Exploded View & Parts List

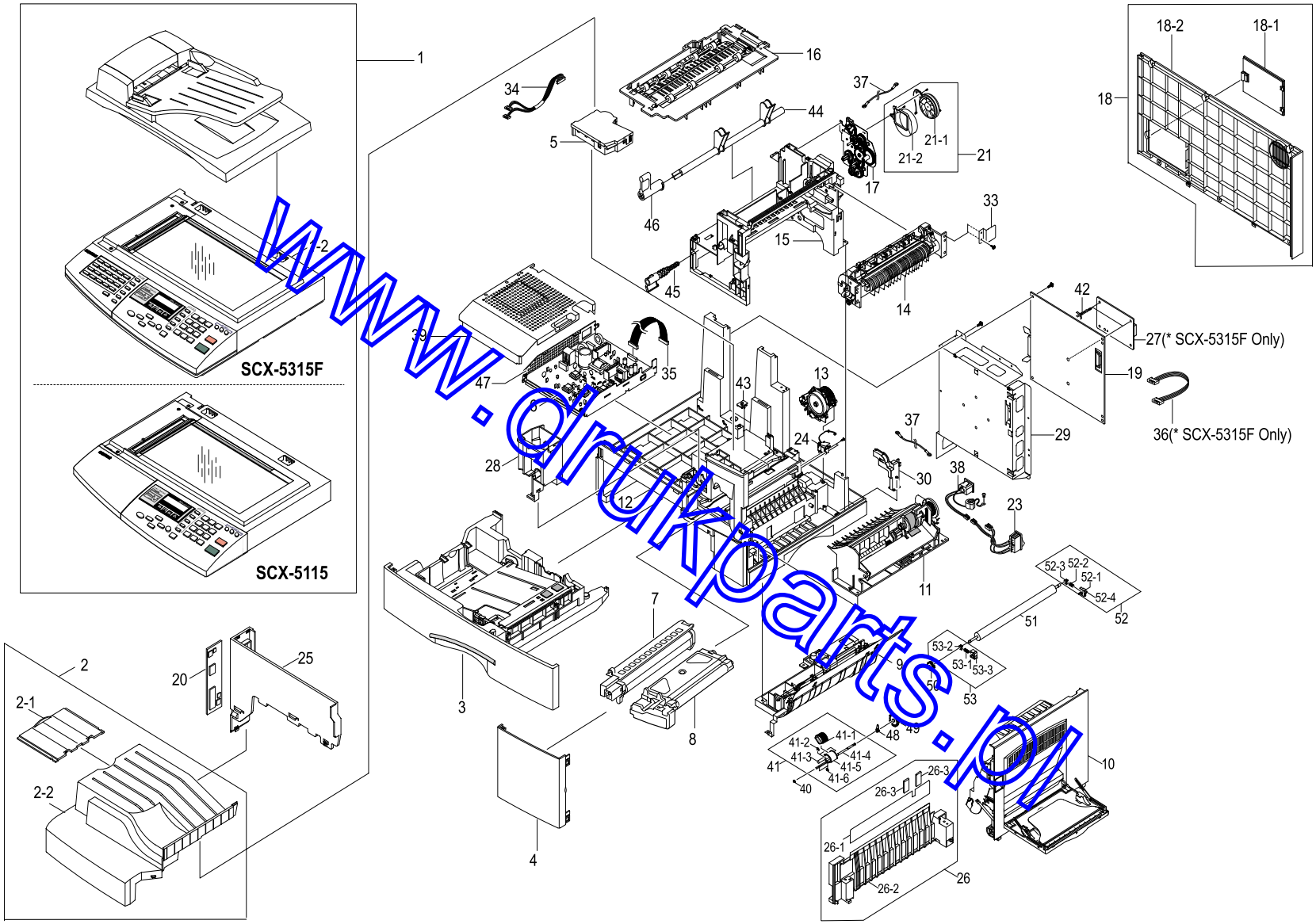

www.drukparts.pl

Main Parts List

(SA. : Service Available)

NO	DESCRIPTION	SEC CODE	Q'TY	SA	REMARK
1	SCANNER ASS'Y(FRO)	JC96-02717A	1	O	
1-1	ELA HOU-ADF ASS'Y	JC81-00429A	1	O	
1-2	ELA HOU-PLATEN ASS'Y	JC96-02748A	1	O	
2	MEA UNIT-COVER PA EXIT ASS'Y	JC97-01556A	1	O	
2-1	PMO-TRAY EXTENTION MP NE	JC72-00354B	1	O	
2-2	PMO-COVER PAPER EXIT	JC72-00786A	1	O	
3	MEC-CASSETTE ASS'Y(LETTER)	JC97-01642A	1	O	LETTER/A4
4	MEA UNIT-COVER FRONT ASS'Y	JC97-01572A	1	O	
5	UNIT-LSU	JC59-00014A	1	O	
6	SMPS-SMPS(V1)+HVPS	JC44-00039A	1	O	110V
	SMPS-SMPS(V2)+HVPS	JC44-00035A	1	O	220V
7	ELA-OPC UNIT SET	*	1	X	
8	ELA-TONER UNIT SET	*	4	X	
9	ELA HOU-PICKUP ASS'Y	JC96-02180A	1	O	
10	ELA HOU-SIDE COVER ASS'Y	JC96-02183A	1	O	
11	ELA HOU-MP ASS'Y	JC96-02182A	1	O	
12	ELA HOU-BASE FRAME ASS'Y	JC96-02179A	1	X	
13	MEC-FEED ASS'Y	JC75-00148A	1	O	
14	ELA HOU-FUSER(110V)ASS'Y	JC96-02194A	1	O	110V
	ELA HOU-FUSER(220V)ASS'Y	JC96-02178A	1	O	220V
15	ELA HOU-FRAME MAIN ASS'Y	JC96-02184A	1	O	
16	MEC-EXIT ASS'Y	JC97-01643A	1	O	
17	ELA HOU-DRIVE ASS'Y	JC96-02181A	1	O	
18	MEA UNIT-COVER REAR ASS'Y	JC97-01557A	1	O	
18-1	PMO-COVER SIMM,XRX	JC72-41224B	1	O	
18-2	PMO-COVER REAR	JC72-00788A	1	O	
19	PBA MAIN-MAIN	JC92-01354A	1	O	SCX-5315F
19	PBA MAIN-MAIN	JC92-01399A	1	O	SCX-5115
20	PMO-CONNECT PAPER MFP	JC72-00782A	1	O	SCX-5315F
	PMO-CONNECT PAPER MFP	JC72-00782B	1	O	SCX-5115
21	ELA HOU-DUCT FAN	JC96-02311A	1	O	
21-1	FAN-DC	JC31-00012A	1	O	
21-2	PMO-DUCT FAN	JC72-00807A	1	O	
23	CBF POWER STITCH,GRAY	JC39-00055B	1	O	
24	SOLENOID-PICK UP	JC33-00007A	1	O	
25	PMO-COVER EXIT,REAR	JC72-00790A	1	O	
26	MEA UNIT GUIDE CST PA ASS'Y	JC97-01575A	1	O	
26-1	PMO-SHEET GUIDE PAPER	JC72-00836A	1	O	
26-2	PMO-GUIDE CASSETTE RAIL	JC72-00791A	1	O	
26-3	SHEET FEED	JC72-00078A	2	O	

O : Service available X : Service not available

www.drukparts.pl

Main Parts List (Cont.)

(SA. : Service Available)

NO	DESCRIPTION	SEC CODE	Q'TY	SA	REMARK
27	PBA SUB-LIU	JC92-01355A	1	O	ONLY SCX-5315F
28	PMO-DUMMY BASE FRAME	JC72-00789A	1	O	
29	IPR-SHIELD MAIN LOWER	JC70-00245A	1	O	
30	PMO-COVER FEED AY	JC72-00801A	1	O	
31	PMO-COVER BRKT MOTER	JC72-00834A	1	O	
32	PMO-GUIDE PAPER OUT	JC72-00835A	1	O	
33	SHEET-CONNECTOR	JC63-00072A	1	X	
34	CBF HARNESS-LSU	JC39-00163A	1	X	
35	CBF HARNESS-POWER+HVPS	JC39-00162A	1	X	
36	CBF HARNESS-LIU	JB39-00104A	1	X	ONLY SCX-5315F
37	CBF HARNESS-LIU GND	JB39-00103A	2	X	
38	CBF HARNESS-INLET(KOR)	JC39-00186A	1	X	
39	IPR-SHIELD SMPS UPPER	JC70-00248A	1	X	
40	PMO-BUSHING P/U.MP	JC72-41360A	1	X	
41	MEA UNIT-PICKUP ROLLER	JC97-01730A	1	O	
41-1	RUBBER-ROLLER PICKUP	JC73-00145A	1	O	
41-2	RING-E	6044-000231	2	X	
41-3	SHAFT-PICK_UP SUB	JC66-00596A	1	X	
41-4	SHAFT-PICK_UP MAIN	JC66-00595A	1	X	
41-5	HOUSING-PICK_UP	JC61-00771A	1	O	
41-6	RING-E	6044-000125	1	X	
42	SUPPORTER	6103-001048	2	X	ONLY SCX-5315F
43	PMO-WINDOW SENSOR DEVE	JC72-00792A	1	X	
44	PMO-CAM JAM REMOVE	JC72-00799A	1	O	
45	PMO-LOCKER DEVE	JC72-00805A	1	O	
46	PMO-LEVER JAM REMOVE	JC72-00804A	1	O	
47	IPR-SHIELD SMPS LOWER	JC70-00247A	1	O	
48	GEAR-PICK-UP	JC66-00335A	1	O	
49	PMO-BEARING SHAFT	JC72-41191A	1	O	
50	GEAR-TRANSFER	JC66-40947A	1	O	
51	MEC-ROLLER TRANSFER	JC75-00148A	1	O	
52	MEA UNIT-HOLDER GEAR ASS'Y	JC97-01573A	1	O	
52-1	SPRING ETC-PLATE TR	JC61-70203A	1	X	
52-2	SPRING ETC-TR_L	JC61-70961A	1	X	
52-3	PMO-BUSH	JC72-40228A	1	X	
52-4	PMO-HOLDER GND TR	JC72-00883A	1	X	
53	MEA UNIT-HOLDER GND ASS'Y	JC97-01574A	1	O	
53-1	SPRING ETC-TR_R	JC61-70906A	1	X	
53-2	PMO-BUSH	JC72-40228A	1	X	
53-3	PMO-HOLDER GEAR TR	JC72-00884A	1	X	

O : Service available X : Service not available

www.drukparts.pl

5-2. Platen Ass'y Exploded View & Parts List

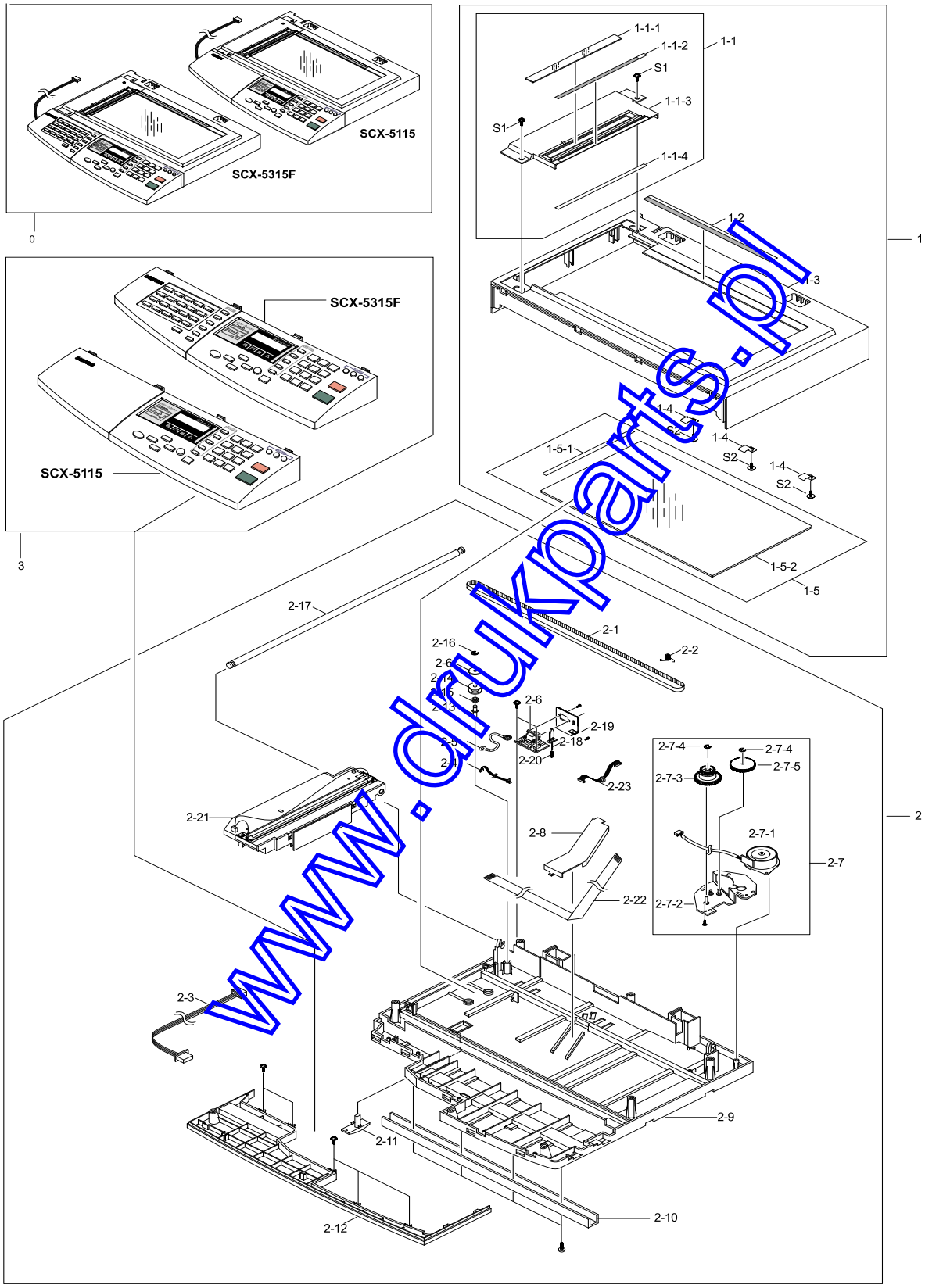

www.dukparts.pl

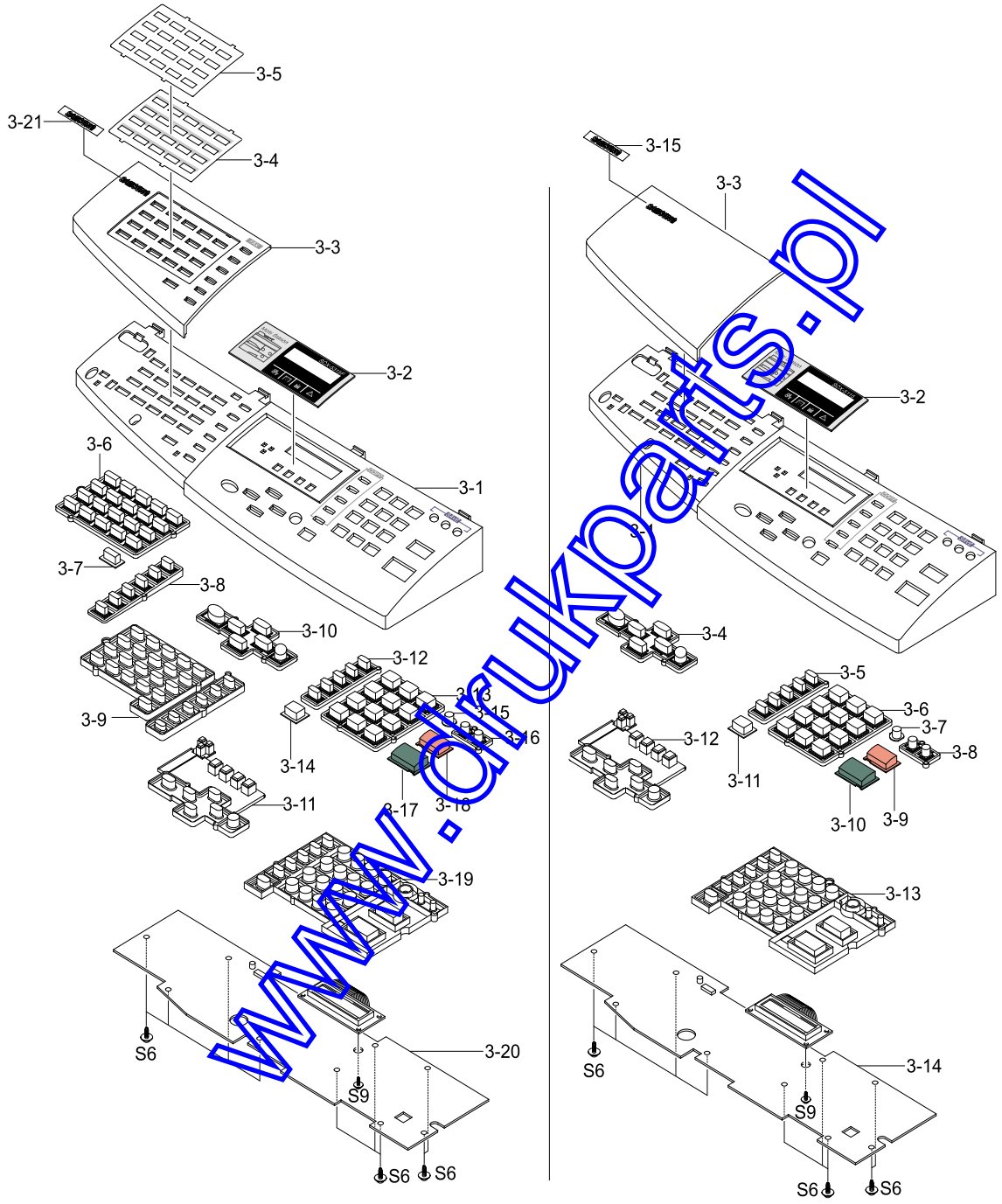

SCX-5315F

SCX-5115

www.drukparts.pl

Platen Ass'y Parts List

(SA. : Service Available)

NO	DESCRIPTION	SEC CODE	Q'TY	SA	REMARK
0	ELA HOU-PLATEN ASS'Y	refer to the table	1	O	
1	MEA UNIT-SCAN UPPER ASS'Y	TBD	1	O	
1-1	A/S MATERAL-DUMMY UPPER ASS'Y	JC81-00426A	1	O	
1-1-1	MCT-GLASS ADF	JC74-00019A	1	X	
1-1-2	LABEL(L)-REGISTRATION EDGE (L)	JB68-00469A	1	X	
1-1-3	PMO-DUMMY UPPER	JC72-00759A	1	X	
1-1-4	SHEET-DUMMY UPPER	JC63-00074A	1	X	
1-2	LABEL(R)-REGISTRATION EDGE (R)	JC72-00809A	1	X	
1-3	PMO-COVER SCAN UPPER	JC72-00758A	1	X	
1-4	IPR-HOLDER GLASS	JB70-00148A	3	X	
1-5	MEA UNIT-GLASS PLATEN ASS'Y	JC97-01580A	1	X	
1-5-1	LABEL(P)-SHEET SHADING	JB68-00419A	1	X	
1-5-2	MCT-GLASS SCANNER(LEGAL)	JC74-00018A	1	X	
2	ELA HOU-SCAN LOWER	JC96-02706A	1	X	
2-1	BELT-TIMING GEAR	6602-001090	1	O	
2-2	SPRING ETC-BELT	JB61-00059A	1	O	
2-3	CBF HARNESS-OPE	JC39-00107A	1	X	
2-4	CBF HARNESS-MAIN-ENGINE	JC39-00030A	1	X	
2-5	CBF HARNESS-DRIVER GND	JB39-00065A	1	X	
2-6	PBA SUB-D_SUB	JC92-01381A	1	X	
2-7	ELA HOU-SCAN MOTOR	JC96-02751A	1	X	
2-7-1	MOTOR STEP-SCAN	JS31-00011A	1	X	
2-7-2	BRACKET-MOTOR PLATEN	JC61-00702A	1	X	
2-7-3	GEAR-TIMING	JC66-00531A	1	X	
2-7-4	RING-E	6044-000125	3	X	
2-7-5	GEAR-REDUCTION73/37	JC66-00530A	1	X	
2-8	COVER-M-CCD CABLE	JC63-00158A	1	X	
2-9	COVER-SCAN LOWER(UMAX)	JC63-00157A	1	X	
2-10	IPR-CHANNEL BASE FRAME	JC70-00239A	2	X	
2-11	HOLDER-M-CCD(UMAX)	JC61-00703A	1	X	
2-12	PMO-COVER DUMMY LOWER(C)	JC72-00794A	1	X	
2-13	ICT-INSERT SHAFT	JB70-00154A	1	X	
2-14	PMO-PULLEY	JB72-00763A	1	X	
2-15	PMO-HOLDER BELT	JB72-00764A	1	X	
2-16	RING-E	6044-000125	1	X	
2-17	SHAFT-CCD(UMAX)	JC66-00532A	1	X	
2-18	PMO-LEVER SENSOR	JC72-00755A	1	O	
2-19	IPR-BRK SCAN BD	JC70-00228A	1	O	
2-20	SPRING ETC-EXIT	JB61-70939A	1	X	
21	ELA HOU-CCD MODULE	JC96-02759A	1	O	
2-22	CBF SIGNAL-CCD FFC	JC39-00236A	1	X	
2-23	CBF HARNESS-SCAN MOTOR	JB39-00077A	1	X	

O : Service available X : Service not available

www.drukparts.pl

SCX-5315F (OPE)

NO	DESCRIPTION	SEC CODE	Q'TY	SA	REMARK
3	ELA HOU-OPE COVER ASS'Y	refer to the table	1	O	
3-1	PMO-COVER OPE(C)	refer to the table	1	O	
3-2	PCT-LCD WINDOW	refer to the table	1	O	
3-3	PMO-COVER DUMMY OPE(M)	refer to the table	1	O	
3-4	PCT-ONETOUCH PAPER	refer to the table	1	O	
3-5	PCT-ONETOUCH CARD	JC72-00871A	1	O	
3-6	PMO-KEY ONETOUCH	JC72-00860A	1	O	
3-7	PMO-KEY SHIFT	JC72-00861A	1	O	
3-8	PMO-KEY FAX	JC72-00862A	1	O	
3-9	RMO-RUBBER ONETOUCH	JC73-00104A	1	O	
3-10	PMO-KEY SCROLL	JC72-00866A	1	O	
3-11	RMO-RUBBER SCROLL	JC73-00106A	1	O	
3-12	PMO-KEY COPY	JC72-00863A	1	O	
3-13	PMO-KEY TEL	JC72-00865A	1	O	
3-14	PMO-KEY OHD	JC72-00864A	1	O	
3-15	PMO-KEY SAVE(T)	JC72-00923A	1	O	
3-16	PMO-KEY SAVE	JC72-00867A	1	O	
3-17	PMO-KEY START	JC72-00868A	1	O	
3-18	PMO-KEY STOP	JC72-00869A	1	O	
3-19	RMO-RUBBER TEL	JC73-00105A	1	O	
3-20	PBA SUB-OPE(KOR)	JC92-01380B	1	O	
3-21	NPR-BADGE	JC71-00008A	1	O	

SCX-5115 (OPE)

NO	DESCRIPTION	SEC CODE	Q'TY	SA	REMARK
3	ELA HOU-OPE COVER ASS'Y(C)	refer to the table	1	O	
3-1	PMO-OPE COVER	refer to the table	1	O	
3-2	PCT-LCD WINDOW	refer to the table	1	O	
3-3	PMO-COVER DUMMY OPE(C)	refer to the table	1	O	
3-4	PMO-KEY SCROLL	JC72-00866A	1	O	
3-5	PMO-KEY COPY	JC72-00863A	1	O	
3-6	PMO-KEY TEL	JC72-00865A	1	O	
3-7	PMO-KEY SAVE(T)	JC72-00923A	1	O	
3-8	PMO-KEY SAVE	JC72-00867A	1	O	
3-9	PMO-KEY STOP	JC72-00869A	1	O	
3-10	PMO-KEY START	JC72-00868A	1	O	
3-11	PMO-KEY OHD	JC72-00864B	1	O	
3-12	RMO-RUBBER SCROLL	JC73-00106A	1	O	
3-13	RMO-RUBBER TEL	JC73-00105A	1	O	
3-14	PBA SUB-OPE(KOR)	JC92-01380B	1	O	
3-15	NPR-BADGE	JC71-00008A	1	O	

www.drukparts.pl

5-3. ADF ASS'Y Exploded View & Parts List

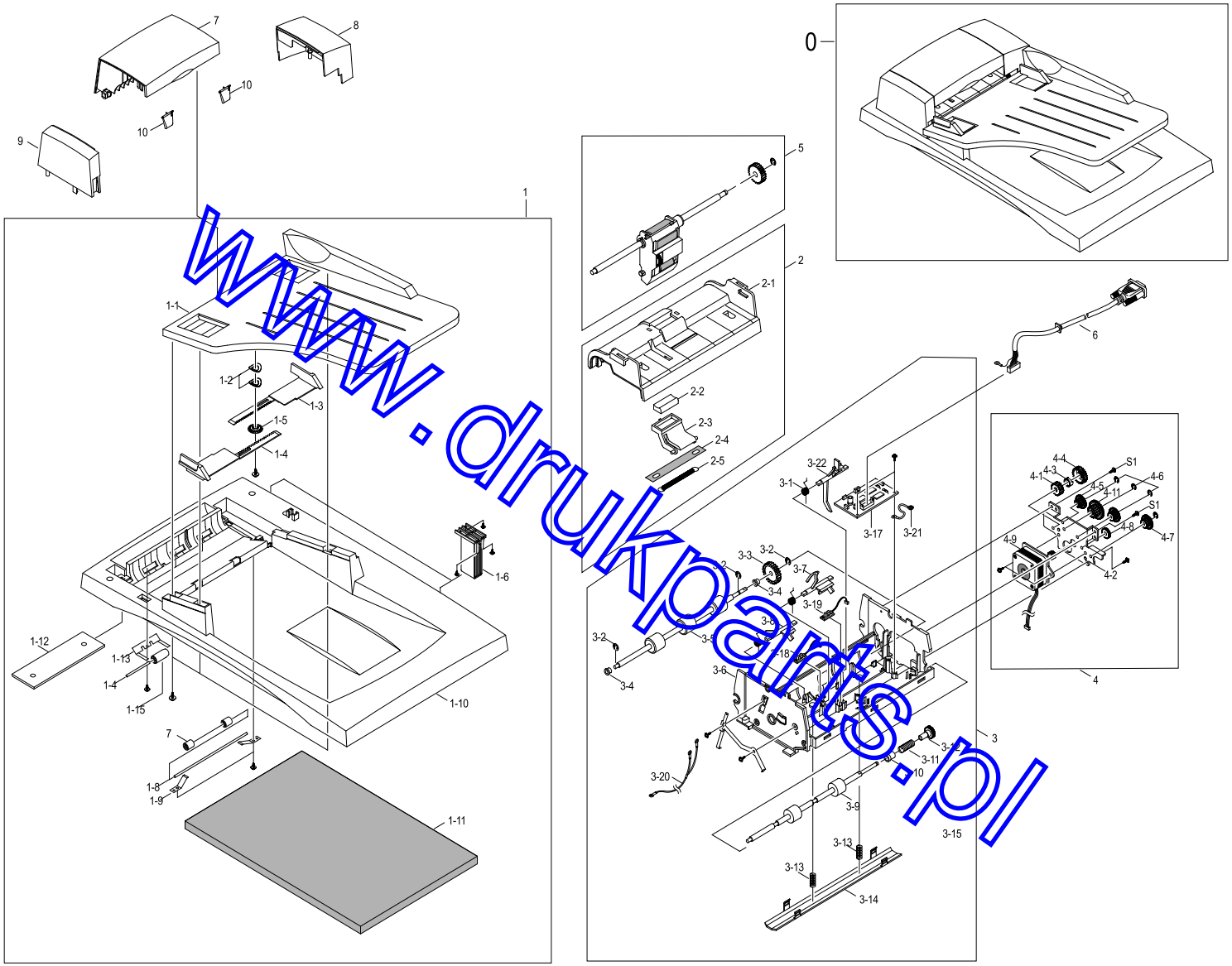

www.drukparts.pl

ADF Ass'y Parts List

(SA. : Service Available)

NO	DESCRIPTION	SEC CODE	Q'TY	SA	REMARK
0	ELA HOU-ADF ASS'Y	JC96-02750A	1	X	
1	MEC UNIT-PLATEN COVER ASS'Y	JC96-02722A	1	O	
1-1	PMO-TX STACKER	JC72-00745A	1	O	
1-2	IPR-WASHER SPRING CY	JF70-10616A	2	X	
1-3	PMO-DOC GUIDE L	JC72-00839B	1	O	
1-4	PMO-DOC GUIDE R	JC72-00838B	1	O	
1-5	GEAR PINION	JF72-41354A	1	X	
1-6	MEA UNIT-HINGE	JC97-01731A	2	O	
1-7	ROLLER EXIT	JC73-00091A	2	X	
1-8	IPR-SHAFT EXIT	JC72-00242A	1	X	
1-9	NPR-SPRING PINCH DRIVE	JB71-00038A	2	X	
1-10	PMO-COVER PLATEN	JC72-00738A	1	X	
1-11	PPR-SPONG SHEET	JC72-00751A	1	O	
1-12	PPR-SHEET PLATEN	JC72-00750A	1	X	
1-13	IPR-SPRING PINCH	JC70-00260A	3	X	
1-14	IPR-SHAFT PINCH	JC70-00266A	3	X	
1-15	PMO-ROLL PINCH	JG72-40669A	3	X	
2	MEA UNIT-ADF UPPER ASS'Y	JC97-01581A	1	O	
2-1	COVER ADF UPPER	JC72-00736A	1	X	
2-2	ADF RUBBER	JC73-00052A	1	O	
2-3	HOLDER ADF	JB72-00825A	1	O	
2-4	SPONG ADF	JB73-00913A	1	X	
2-5	SPRIG ADF	JB61-00009A	1	X	
3	MEA UNIT-ADF LOWER ASS'Y	JC81-00434A	1	O	
3-1	SPRING TORSION DOC	JB61-00076A	1	X	
3-2	E-RING	6044-000159	3	X	
3-3	GEAR-ADF 38	JB66-00103A	1	X	
3-4	PMO-BUSH	JB72-00819A	2	O	
3-5	MEC-ROLLER DRIVE	JC75-00149A	1	O	
3-6	COVER ADF LOWER	JC72-00735A	1	X	
3-7	PMO-ACTUATOR SENSOR DOC.	JC72-00837A	1	O	
3-8	PMO-ACTUATOR SENSOR REGI	JB72-00747A	1	O	
3-9	MEC-ROLLER EXIT	JC75-00150A	1	O	
3-10	BUSHING HOLDER	JG72-40732A	1	X	
3-11	SPRING CLUTCH	JC61-00062A	1	X	
3-12	GEAR-EXITE 23	JC66-00323A	1	X	
3-13	SPRING WHITE BAR	TBD	2	X	
3-14	BRKT WHITE BAR	JC70-00225A	1	O	
3-15	PPR-WHITE BAR SHEET	JC72-00752A	1	O	
3-16	PMO-ACTUATOR SENSOR REGI	JC72-00747A	1	X	
3-17	PBA SUB-ADF	JC81-00437A	1	O	

O : Service available X : Service not available

www.drukparts.pl

ADF Ass'y Parts List (Cont.)

(SA. : Service Available)

NO	DESCRIPTION	SEC CODE	Q'TY	SA	REMARK
3-18	PBA SUB-ADF POS SEN	JC92-01365A	1	O	
3-19	PBA SUB-ADF DET SEN	JC92-01366A	1	O	
3-20	CBF HARNESS-ADF ROLLER GND	TBD	1	X	
3-21	CBF HARNESS-DRIVER GND	JB39-00065A	1	X	
3-22	PMO-ACTUATOR SENSOR SCAN	JC72-00746A	1	O	
4	MEA UNIT-ADF MOTOR ASS'Y	JC81-00435A	1	O	
4-1	GEAR CLUTCH 29	JB66-00101A	1	X	
4-2	BRKT ADF MOTOR	JC70-00224A	1	X	
4-3	PMO-WHITE CLUTCH SUB 29	JB72-00844A	1	X	
4-4	GEAR-CLUTCH IDLE 39	JC66-00322A	1	X	
4-5	GEAR DOUBLE 33/20	JG61-40038A	2	X	
4-6	E-RING	6044-000150	6	X	
4-7	GEAR-DOUBLE 17/35	JG66-40039A	2	X	
4-8	GEAR IDLE 25	JG66-40036A	1	X	
4-9	MOTOR ADF	JC31-00017A	1	X	
4-10	GEAR-JAM REMOVE	JC66-00329A	1	X	
4-11	GEAR REDUCTION45/19	JC66-00324A	1	X	
5	MEC UNIT-PICK UP ASS'Y	JC97-01582A	1	O	
6	CBF HARNESS-D-SUB	JC39-00190A	1	O	
7	PMO-COVER OPEN	JC72-00737A	1	O	
8	PMO-COVER SIDE L	JC72-00739A	1	O	
9	PMO-COVER SIDE R	JC72-00740A	1	O	
10	PMO-GUIDE PAPER	JC72-00843A	2	O	

O : Service available X : Service not available

www.drukparts.pl

5-4. Side Cover Ass'y Exploded View & Parts List

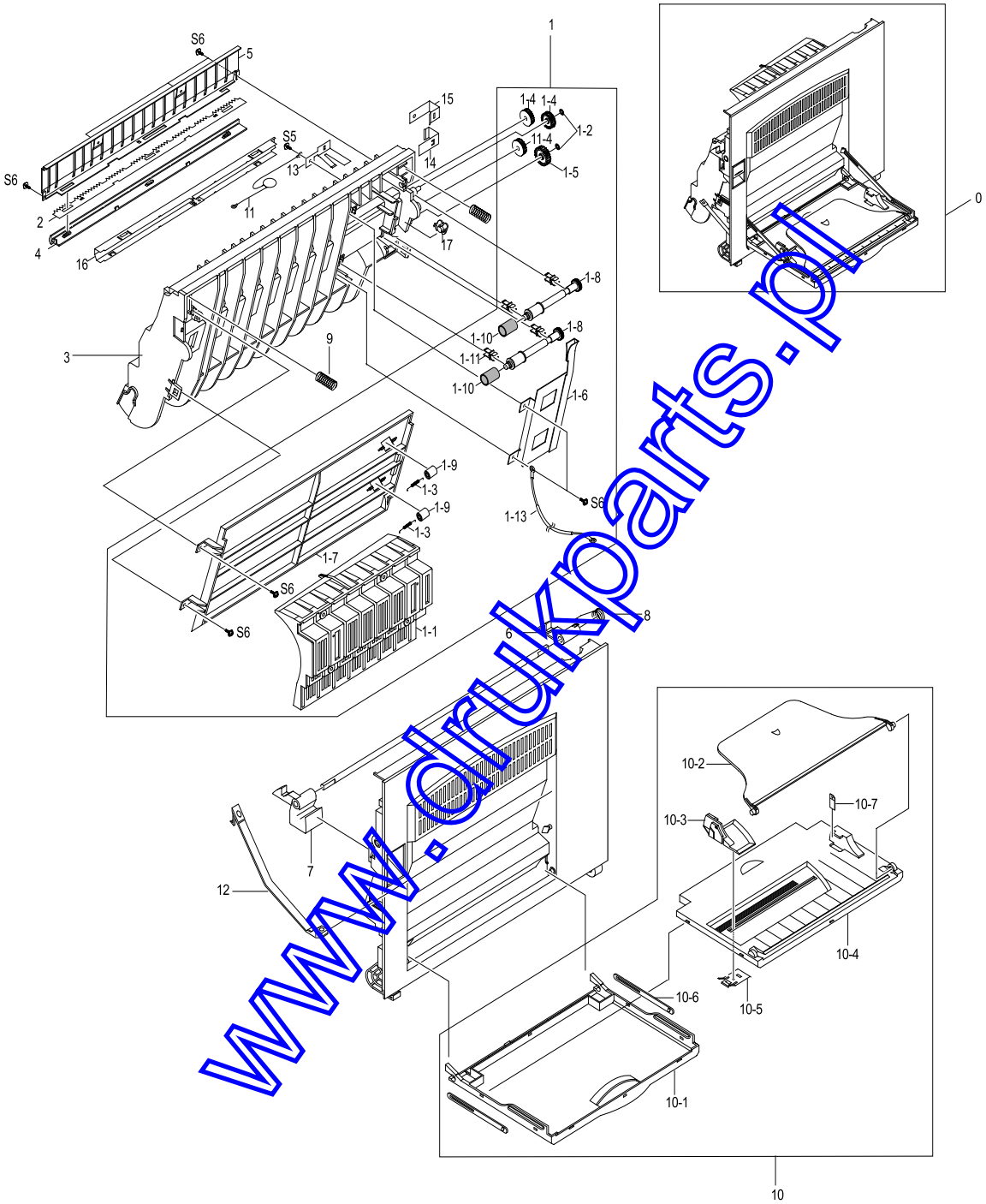

www.drukparts.pl

Side Cover Ass'y Parts List

(SA. : Service Available)

NO	DESCRIPTION	SEC CODE	Q'TY	SA	REMARK
0	ELA HOU-SIDE COVER ASS'Y	JC96-02183A	1	O	
1	MEA UNIT-DUPLEX ASS'Y	JC97-01578A	1	X	
1-1	PMO-GUIDE DP SIDE	JC72-00806A	1	O	
1-2	RING-CS	6044-000001	2	O	
1-3	SPRING-FUSER EXIT	JC61-70976A	2	O	
1-4	GEAR-DUP IDLER 17	JC66-00341A	3	O	
1-5	GEAR-MP/DUP DRV	JC66-00346A	1	O	
1-6	IPR-BRKT G DUP	JC70-00233A	1	O	
1-7	PMO-GP LOWER DP	JC72-00732A	1	O	
1-8	PMO-SHAFT DUP DRIVER	JC72-00764A	2	O	
1-9	PMO-ROLLER_EXIT	JC72-40361A	2	O	
1-10	RPR-RUBBER EXIT	JC73-10203A	2	O	
1-11	PMO-BUSHING TX(B4)	JG72-40744A	4	O	
1-12	PMO-TIE STOPPER	JC72-00766A	2	O	
1-13	CBF HARNESS-SCAN GND	JC39-00046A	1	O	
2	IPR-PLATE SAW	JC70-10232A	2	O	
3	PMO-FEED FRAME	JC72-00731A	1	O	
4	PMO-HOLDER SAW	JC72-41213A	1	O	
5	IPR-BRACKET GUIDE A	JC70-00229A	1	O	
6	PMO-LOCKER SIDE R	JC72-00763A	1	O	
7	PMO-LOCKER OPEN	JC72-00762A	1	O	
8	SPRING-LOCKER TORSION	JC61-00479A	1	O	
9	SPRING-FEED	JC61-00478A	2	O	
10	MEC UNIT-TRAY ASS'Y	JC97-01577A	1	O	
10-1	PMO-TRAY CASE, MP	JC72-00776A	1	X	
10-2	PMO-TRAY-EXT, MP	JC72-00778A	1	X	
10-3	PMO-SIDE GUIDE, MP	JC72-00547F	1	X	
10-4	PMO-TRAY COVER, MP	JC72-00777A	1	X	
10-5	IPR-GUIDE LATCH, MP	JB70-10906A	1	X	
10-6	PMO-TRAY LINK,MP	JC72-00857A	1	X	
10-7	LABEL(R)-HEIGHT,MP	JC68-00697A	1	X	
11	CBF HARNESS-OPE GND	JC39-00036A	1	O	
12	PMO-TIE STOPPER	JC72-00766A	2	O	
13	IPR-BRKT GROUND B	JC70-00230A	1	O	
14	IPR-BRKT GROUND TR	JC70-00231A	1	O	
15	IPR-BRKT GROUND A	JC70-00232A	1	O	
16	IPR-BRACKET GUIDE B	JC70-00234A	1	O	
17	PMO-BUSHING FEED	JC72-00730A	1	O	

O : Service available X : Service not available

www.drukparts.pl

5-5. Cassette Ass'y Exploded View & Parts List

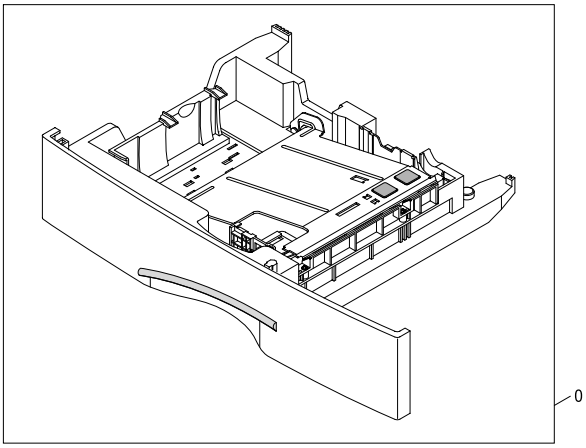

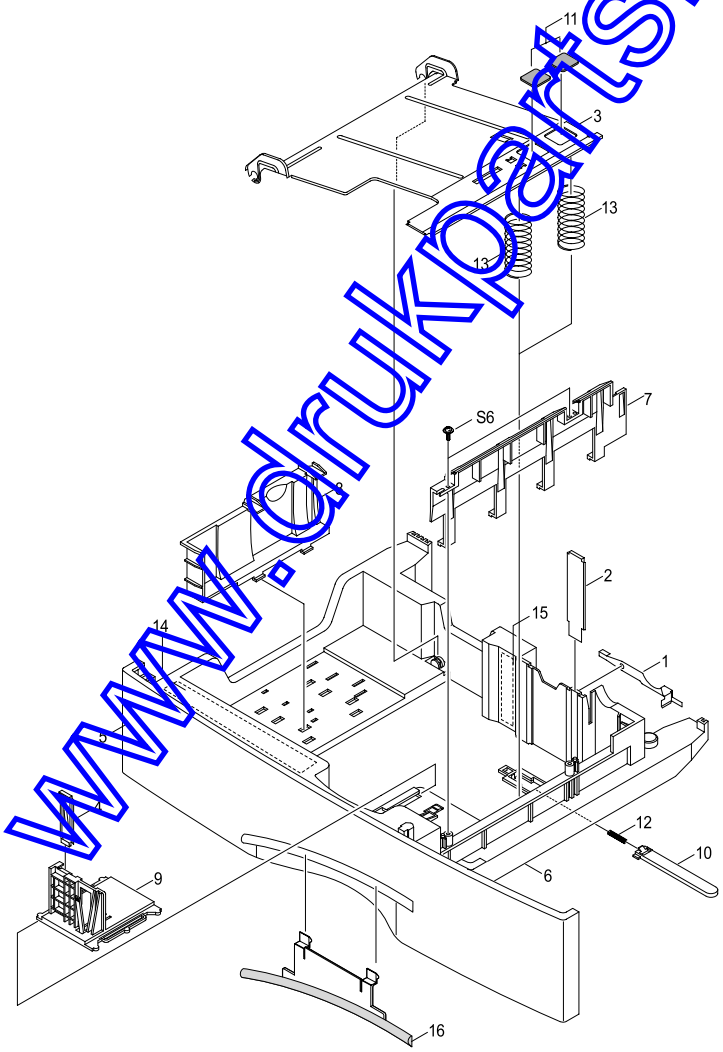

www.drukparts.pl

Cassette Ass'y Parts List

(SA. : Service Available)

NO	DESCRIPTION	SEC CODE	Q'TY	SA	REMARK
0	MEA UNIT-CASSETTE(A4) ASS'Y	JC97-01642A	1	O	
1	IPR-FINGE	JC70-00220A	1	X	
2	IPR-GUIDE PLT PAPER	JC70-10923A	1	X	
3	IPR-PLATE K/UP	JC70-00221A	1	X	
4	IPR-SPR PLT G/SIDE	JC70-10929A	1	O	
5	PMO-COVER CASSETTE(C)	JC72-00795A	1	X	
6	PMO-FRAME CASSETTE	JC72-00716A	1	X	
7	PMO-GUIDE FRONT CST	JC72-00798A	1	X	
8	PMO-GUIDE REAR	JC72-00717A	1	O	
9	PMO-GUIDE/SIDE CST	JC72-40967D	1	O	
10	PMO-LOCKER PLATE	JC72-41210A	1	O	
11	PRP-PAD CST	JC73-10910A	2	O	
12	SPRING-LOCKER PLATE	JG61-70531A	1	O	
13	SPRING-PLATE K/UP	JC61-00455A	2	O	
14	LABEL(R)-INSTRUCTION CST	JC68-00692A	1	X	
15	LABEL(R)-HEIGHT CST	JC68-00709A	1	X	
16	PMO-IMPACT CASSETTE	JC72-00817A	1	X	

O : Service available X : Service not available

www.drukparts.pl

5-6. Exit Ass'y Exploded View & Parts List

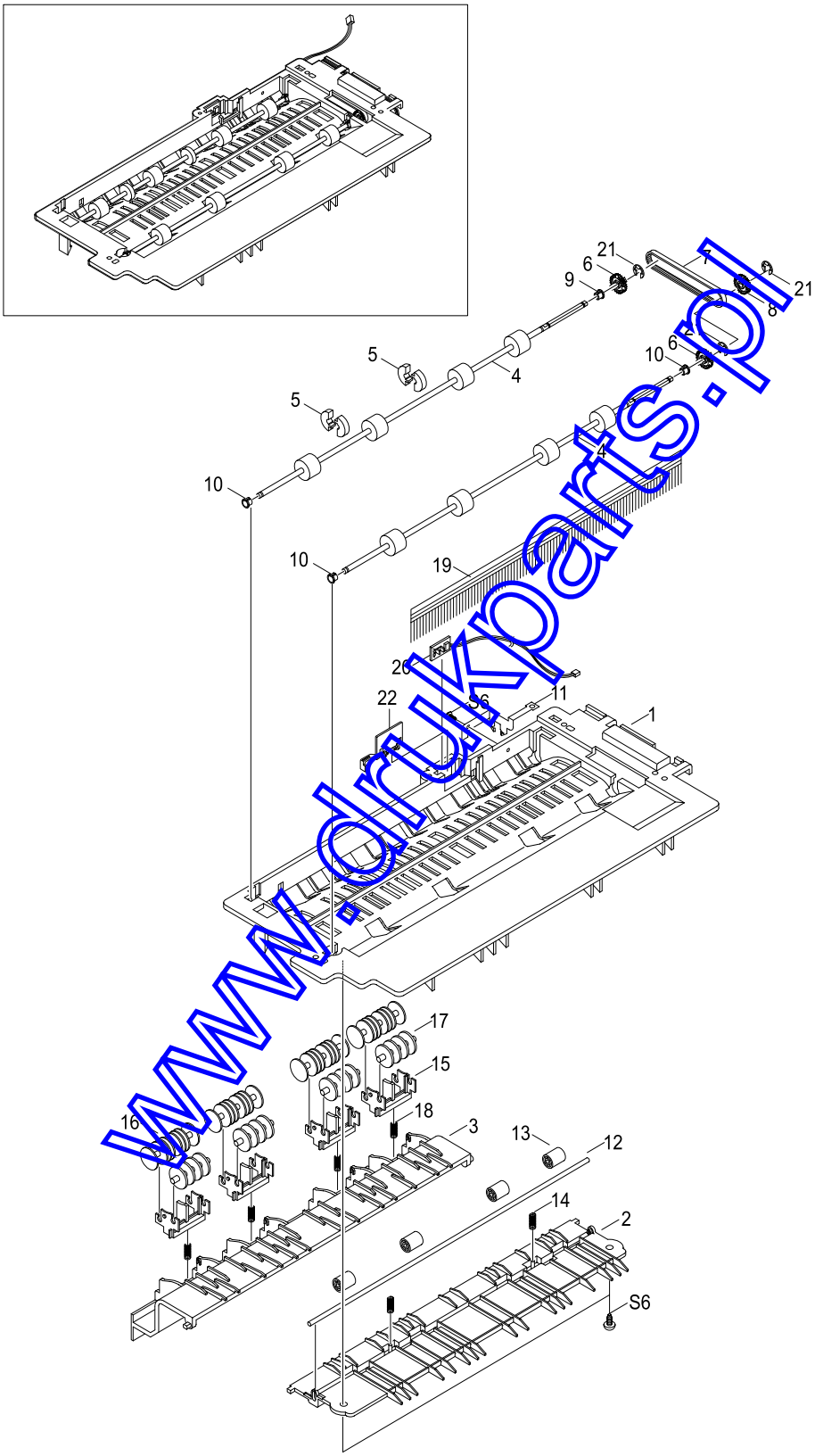

www.drukparts.pl

Exit Ass'y Parts List

(SA. : Service Available)

NO	DESCRIPTION	SEC CODE	Q'TY	SA	REMARK
0	MEC-EXIT ASS'Y	JC97-01643A	1	O	
1	PMO-GUIDE-EXIT UPPER	JC72-00708A	1	X	
2	PMO-GUIDE-EXIT LOWER	JC72-00710A	1	X	
3	PMO-GUIDE-JAM REMOVE	JC72-00712A	1	X	
4	MEC-ROLLER EXIT DRV	JC75-00127A	2	O	
5	PMO-ROLLER DECURL	JC72-00833A	4	O	
6	PMO-PULLEY DUPLEX	JC72-40980A	2	X	
7	BELT-TIMING GEAR	6602-001084	1	X	
8	GEAR-DUPLEX	JC66-40912A	1	X	
9	PMO-BEARING LARGE DP	JC72-00885A	1	X	BLACK
10	PMO-BEARING LARGE DP	JC72-40978A	3	O	
11	IPR-GROUND-EXIT	JC70-00252A	1	X	
12	ICT-SHAFT-EXIT LOWER ID	JC70-00274A	1	X	
13	PMO-ROLLER_EXIT	JC72-40361A	1	X	
14	SPRING-EXIT ROLL FD	JC61-70911A	2	X	
15	PMO-HOLDER EXIT ROLL	JC61-00547A	4	X	
16	PMO-ROLLER FD F	JC72-41007A	4	X	
17	PMO-ROLLER FD R	JC72-41008A	4	X	
18	SPRING-EXIT LOWER IDLE	JC61-00484A	4	X	
19	MEC- BRUSH ANTISTATIC	JC75-00095A	1	O	
20	PBA SUB-BIN-FULL SENSOR	JC92-01400A	1	X	
21	E-RING	6024-000159	3	X	
22	PMO-LEVER STACKING	JC72-00709A	1	O	

O : Service available X : Service not available

www.drukparts.pl

5-7. Feeder Ass'y Exploded View & Parts List

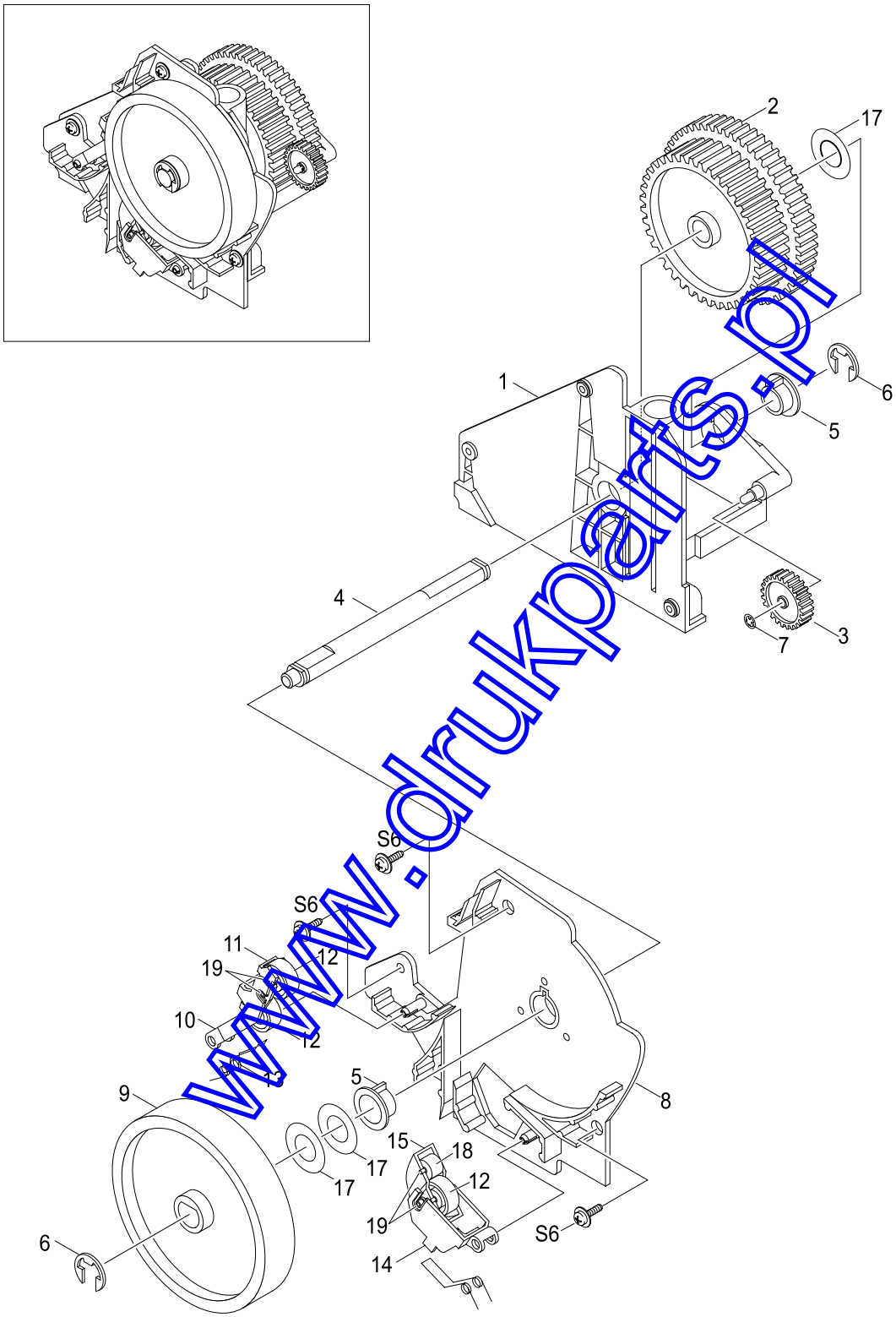

www.drukparts.pl

Feeder Ass'y Parts List

(SA. : Service Available)

NO	DESCRIPTION	SEC CODE	Q'TY	SA	REMARK
0	MEC-FEED ASS'Y	JC75-00143A	1	O	
1	PMO-FRAME FEED	JC72-00821A	1	X	
2	GEAR-FEED	JC66-00332A	1	X	
3	GEAR-MP/DUP DRV	JC66-00346A	1	X	
4	ICT-SHAFT FEED	JC70-00267A	1	X	
5	BEARING-PICKUP	JC66-10202A	2	X	
6	RING-E	6044-000125	2	X	
7	RING-CS	6044-000001	1	X	
8	PMO-BRKT FEED	JC72-00720A	1	X	
9	PMO-ROLLER FEED	JC72-00727A	1	O	
10	PMO-HOLDER PINCH C	JC72-00723A	1	X	
11	PMO-HOLDER PINCH SUB	JC72-00725A	1	X	
12	PMO-ROLLER FEED L	JC72-40261A	3	X	
13	SPRING-FEED CAST	JC61-00480A	1	X	
14	PMO-HOLDER PINCH M	JC72-00724A	1	X	
15	PMO-SUB HOLDER FEED	JC72-40260A	1	X	
16	SPRING-FEED MP	JC61-00481A	1	X	
17	WASHER-PLAIN	6031-000021	3	X	
18	PMO-ROLLER FEED S	JC72-40262A	1	X	
19	IPR-SHAFT FEED IDLER	JC70-10230A	4	X	

O : Service available X : Service not available

www.drukparts.pl

5-8. MP Ass'y Exploded View & Parts List

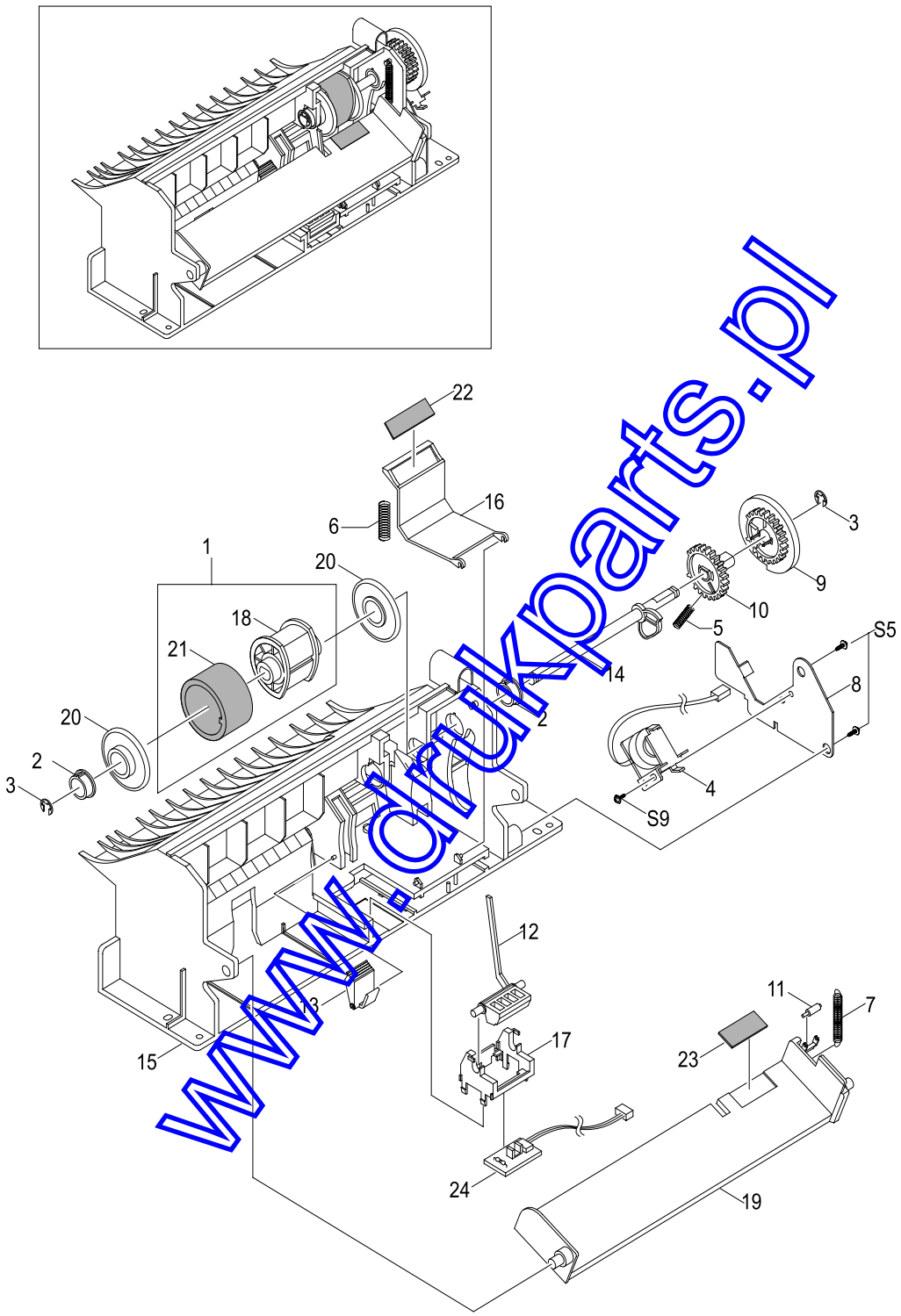

www.drukparts.pl

MP Ass'y Parts List

(SA. : Service Available)

NO	DESCRIPTION	SEC CODE	Q'TY	SA	REMARK
0	ELA HOU-MP ASS'Y	JC96-02182A	1	O	
1	A/S-PICK UP, MP AS(FRU)	JC81-00427A	1	O	
2	PMO-BUSHING PICKUP,MP	JC72-41364A	2	O	
3	RING-E	6044-000125	2	O	
4	SOLENOIDE,MP	JC33-00006A	1	O	
5	SPRING-CAM MP	JC61-00003A	1	O	
6	SPRING-PICK UP,MP	JC61-00549A	1	X	
7	SPRING-KNOCKUP,MP	JC61-00483A	1	O	
8	IPR-BRACKET SOLENOIDE	JC70-00237A	1	X	
9	PMO-HOLDER CAM MPF	JC72-00055A	1	X	
10	PMO-GEAR P/U MPF	JC72-00056A	1	X	
11	PMO-ROLLER CAM.MP	JC72-00761A	1	X	
12	PMO-ACTUATOR,MP	JC72-00767A	1	O	
13	PMO-ADJUSTER,MP	JC72-00768A	1	O	
14	PMO-CAM PICK UP,MP	JC72-00769A	1	O	
15	PMO-FRAME,MP	JC72-00770A	1	X	
16	PMO-HOLDER PAD,MP	JC72-00771A	1	O	
17	PMO-HOLDER SENSOR,MP	JC72-00772A	1	O	
18	PMO-HOUSING PICK UP,MP	JC72-00773A	1	X	
19	PMO-PLATE KNOCK UP,MP	JC72-00775A	1	X	
20	PMO-IDLE PICK UP,MP	JC72-41027A	2	O	
21	RPR-RUBBER PICK UP,MP	JC73-00089A	1	X	
22	RPR-RCT-PAD-PICKUP,MP	JC73-00090A	1	O	
23	RPR-PAD KNOCK UP,MP	JC73-10906A	1	O	
24	PBA SUB-MP SEN	JC92-01362A	1	O	

O : Service available X : Service not available

www.drukparts.pl

5-9. Base Frame Exploded View & Parts List

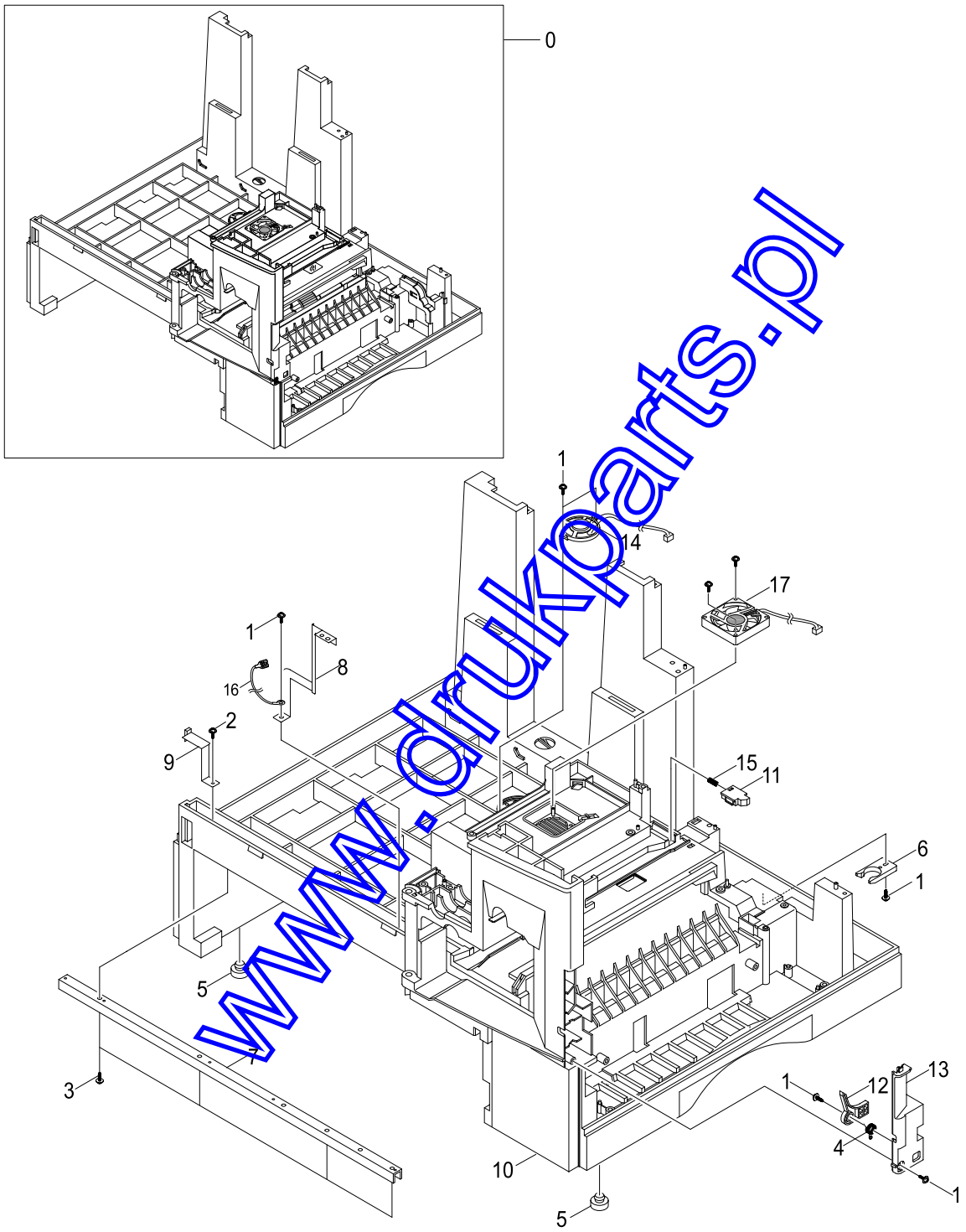

www.drukparts.pl

Base Frame Parts List

(SA. : Service Available)

NO	DESCRIPTION	SEC CODE	Q'TY	SA	REMARK
0	ELA HOU-BASE FRAME ASS'Y	JC96-02714A	1	X	SCX-5315F
	ELA HOU-BASE FRAME ASS'Y	JC96-02714B	1	X	SCX-5115
1	SCREW-TAPTITE	6003-000196	5	X	
2	SCREW-TAPTITE	6003-000269	2	X	
3	SCREW-TAPTITE	6003-001256	4	X	
4	SPRING-TORSION	JC61-00486A	1	X	
5	FOOT-RUBBER	JC61-40001A	2	O	
6	CAM-CATCH	JC66-00050A	1	X	
7	IPR-CHANNEL BASE FRAME	JC70-00239A	1	X	
8	IPR-GROUND PLATE A(OPC)	JC70-00240A	1	O	
9	IPR-GROUND PLATE B(BASE)	JC70-00241A	1	O	
10	PMO-BASE FRAME	JC72-00779A	1	X	
11	PMO-BRACKET PUSH DEVE	JC72-00780A	2	X	
12	PMO-BRACKET SIDE OPEN	JC72-00781A	1	O	
13	PMO-COVER FRONT DUMMY	JC72-00785A	1	X	
14	ELA M/MEDIO AUD-SPEAKER	JC96-01607A	1	O	SCX-5315F ONLY
15	SPRING-DEVE	JG61-70527A	2	X	
16	CBF HARNESS-OPC GND	JC39-00179A	1	X	
17	FAN DC(LSU)	JC31-00026A	1	X	

O : Service available X : Service not available

www.drukparts.pl

5-10.Pick-up Ass'y Exploded View & Parts List

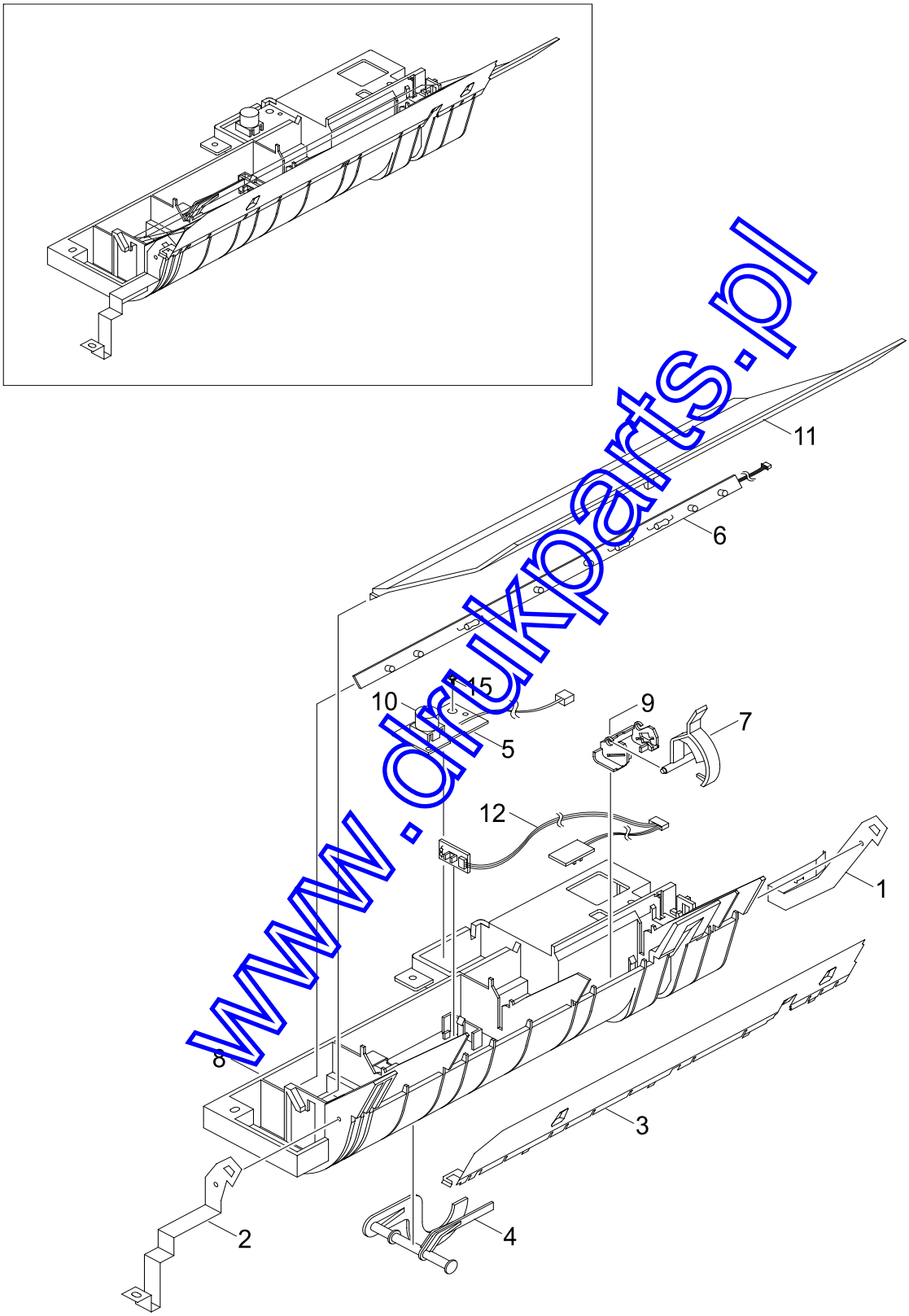

www.drukparts.pl

Pick-up Ass'y Parts List

(SA. : Service Available)

NO	DESCRIPTION	SEC CODE	Q'TY	SA	REMARK
0	ELA HOU-PICKUP ASS'Y	JC96-02715A	1	O	
1	IPR-GND FEED	JC70-00238A	1	X	
2	IPR-GND INPUT	JC70-00235A	1	O	
3	IPR-GUIDE INPUT	JC70-00222A	1	O	
4	PMO-ACTUATOR EMPTY	JC72-00719A	1	O	
5	PBA SUB-TONER_TX	JC92-01359A	1	O	
6	PBA SUB-PTL	JC92-01361A	1	O	
7	PMO-FEED SENSOR	JC72-00721A	1	X	
8	PMO-GUIDE PAPER	JC72-00722A	1	X	
9	PMO-HOLDER SENSOR FEED	JC72-00726A	1	X	
10	PMO-LENS TONER SENSOR	JC72-00803A	1	X	
11	PMO-PTL PATH	JC72-00822A	1	X	
12	PBA SUB-FEED+P.EMP SEN.	JC92-01363A	1	O	

O : Service available X : Service not available

www.drukparts.pl

5-11. Drive Ass'y Exploded View & Parts List

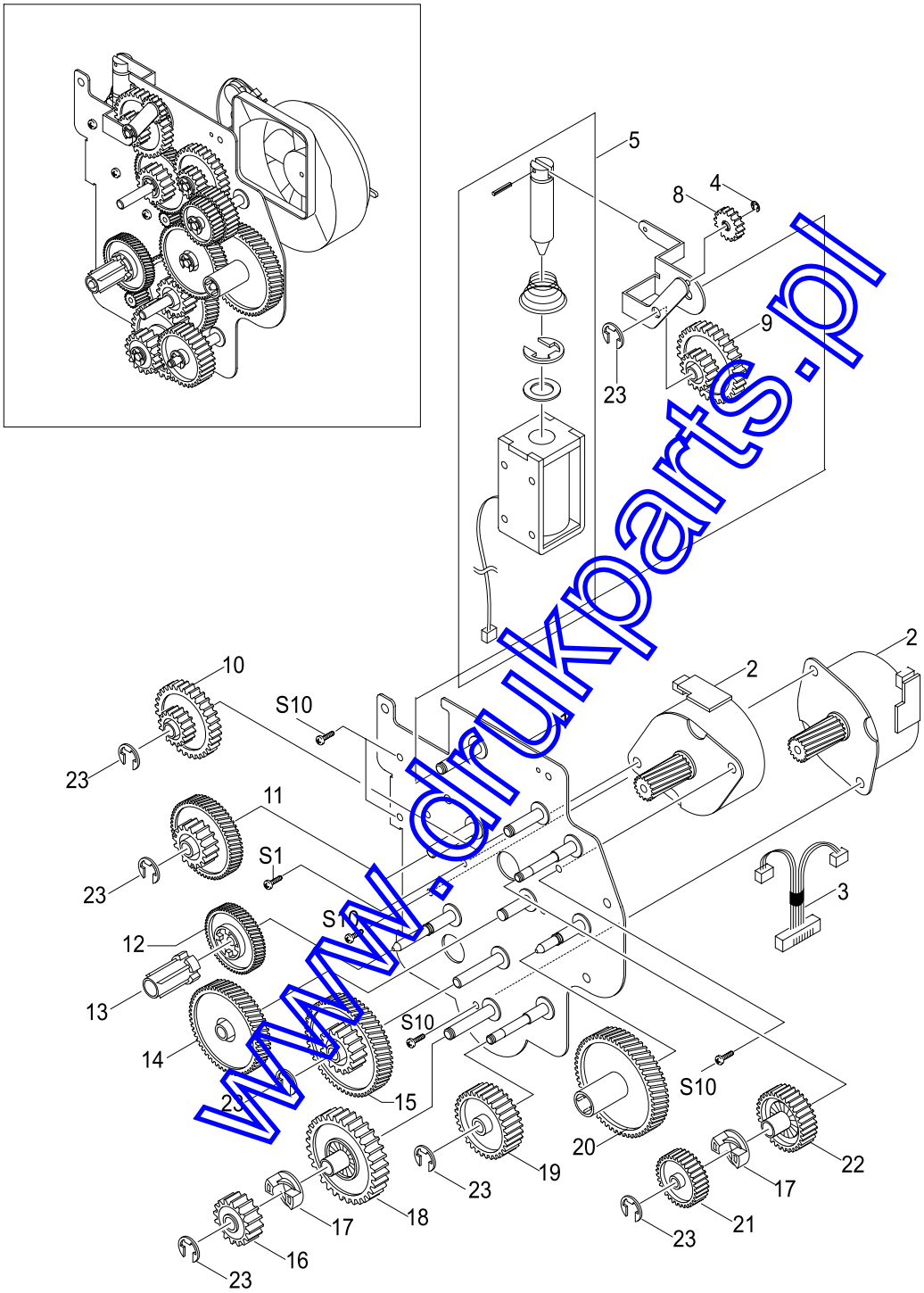

www.drukparts.pl

Drive Ass'y Parts List

(SA. : Service Available)

NO	DESCRIPTION	SEC CODE	Q'TY	SA	REMARK
0	ELA HOU-DRIVE ASS'Y	JC96-02741A	1	O	
1	IPR-BRKT MOTOR	JC70-00257A	1	X	
2	MOTOR-STEP	JC31-00020B	2	O	
3	CBF-HARNESS-MOTOR	JC39-00165A	1	X	
4	RING-E	6044-000159	1	X	
5	SOLENOID-DUPLEX	JC33-00008A	1	O	
6	SPRING SOLENOID DP	JC61-70915A	1	X	
7	IPR-LINK SOLENOID	JC70-00258A	1	X	
8	GEAR-EXIT/U,ID	JC66-40211B	1	X	
9	GEAR-SWING DRV	JC66-00349A	1	X	
10	GEAR-35/19	JC66-00350A	1	X	
11	GEAR-71/23	JC66-00345A	1	X	
12	GEAR-DEVE DRV	JC66-00338A	1	X	
13	PMO-DEV/COUPLING	JC72-00743A	1	X	
14	GEAR-RDCN,OPC	JC66-00371A	1	X	
15	GEAR-86/23	JC66-00337A	1	X	
16	GEAR-RDCN FEED OUTER	JC66-00343A	1	X	
17	GEAR-HUB CLUTCH	JC66-00340A	2	X	
18	GEAR-RDCN FEED INNER	JC66-00342A	1	X	
19	GEAR-FEED DRV	JC66-00348A	1	X	
20	GEAR-OPC DRV	JC66-00347A	1	X	
21	GEAR-GEAR FUSER DRV OUTER	JC66-00334A	1	X	
22	GEAR-FUSER DRV INNER	JC66-00333A	1	X	
23	RING-E	6044-000231	8	X	

O : Service available X : Service not available

www.drukparts.pl

5-12. Main Frame Ass'y Exploded View & Parts List

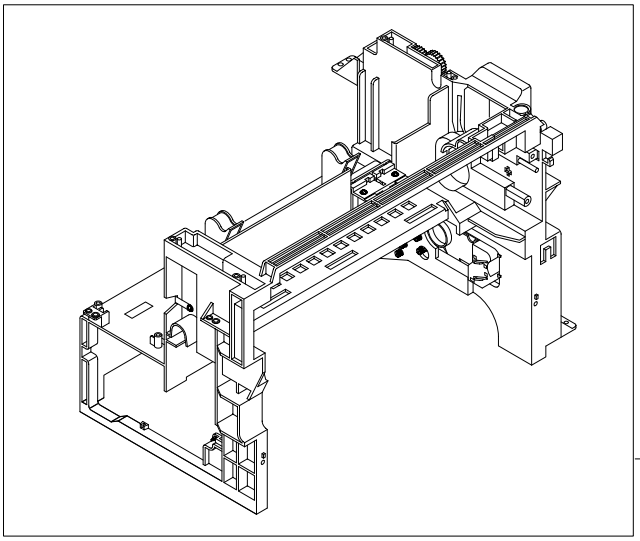

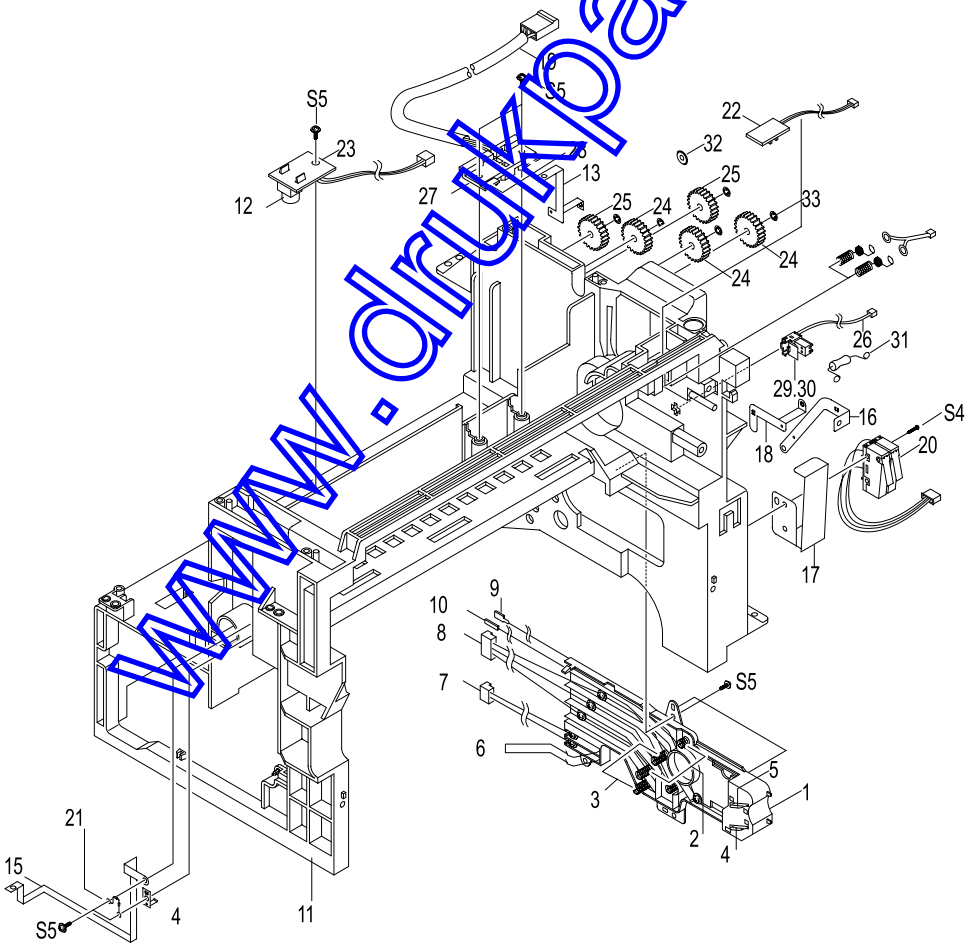

www.drukparts.pl

Main Frame Ass'y Parts List

(SA. : Service Available)

NO	DESCRIPTION	SEC CODE	Q'TY	SA	REMARK
0	ELA HOU-FRAME MAIN ASS'Y	JC96-02184A	1	O	
1	PMO-HOUSING TERMINAL	JC72-00802A	1	O	
2	IPR-TERMINAL BLADE	JC70-00269A	2	X	
3	IPR-TERMINAL SUPPLY	JC70-00270A	2	X	
4	IPR-TERMINAL TR	JC70-00271A	1	X	
5	IPR-TERMINAL GND	JC70-00272A	1	X	
6	IPR-TERMINAL DEVE KEY	JC70-00273A	2	X	
7	CBF-HARNESS-DEV-ID	JC39-00166A	1	X	
8	CBF-HARNESS-BLADE+SUPPLY+DEV	JC39-00170A	1	X	
9	CBF-HARNESS-THV WIRE	JC39-00168A	1	X	
10	CBF-HARNESS-MHV WIRE	JC39-00169A	1	X	
11	PMO-FRAME MAIN	JC72-00800A	1	X	
12	PMO-LENS TONER SENSOR	JC72-00809A	2	X	
13	IPR-GND EXIT	JC70-00214A	1	X	
14	IPR-GND OPC	JC70-00216A	1	X	
15	IPR-GND OPC BASE	JC70-00217A	1	X	
16	IPR-GND FUSER	JC70-00215A	1	X	
17	IPR-GUARD C/O S/W	JC70-00218A	1	X	
18	IPR-GND TERMINAL	JC70-00219A	1	X	
19	CBF HARNESS-AC WIRE	JC39-00171A	1	X	
20	AS-SWITCH MICRO(FRU)	JC81-00438A	1	O	
21	CBF-HARNESS-EARTH(TX MOTOR)	JB39-00017A	1	X	
22	PBA SUB-EXIT SENSOR	JC92-01364A	1	O	
23	PBA SUB-TONER_RX	JC92-01360A	1	O	
24	GEAR-EXIT/U,ID	JC66-40211B	3	X	
25	GEAR-EXIT,IDLE(Z17)	JC66-40964A	2	X	
26	CBF-HARNESS THERMISTOR_JOINT	JC39-00164A	1	O	
27	PMO-HOUSING TERMINAL	JC72-41010A	1	X	
28	IPR-TERMINAL FU	JC70-10961A	2	X	
29	PMO-CAP CONNECTOR L	JC72-00463A	1	O	
30	PMO-CAP CONNECTOR U	JC72-00465A	1	O	
31	ELA HOU-MOTOR GND	JC96-01579A	1	X	
32	SPRING-CLUTCH	JB61-70922A	2	X	
33	RING-CS	6044-000001	5	X	

O : Service available X : Service not available

www.drukparts.pl

5-13. FuserAss'y Exploded View & Parts List

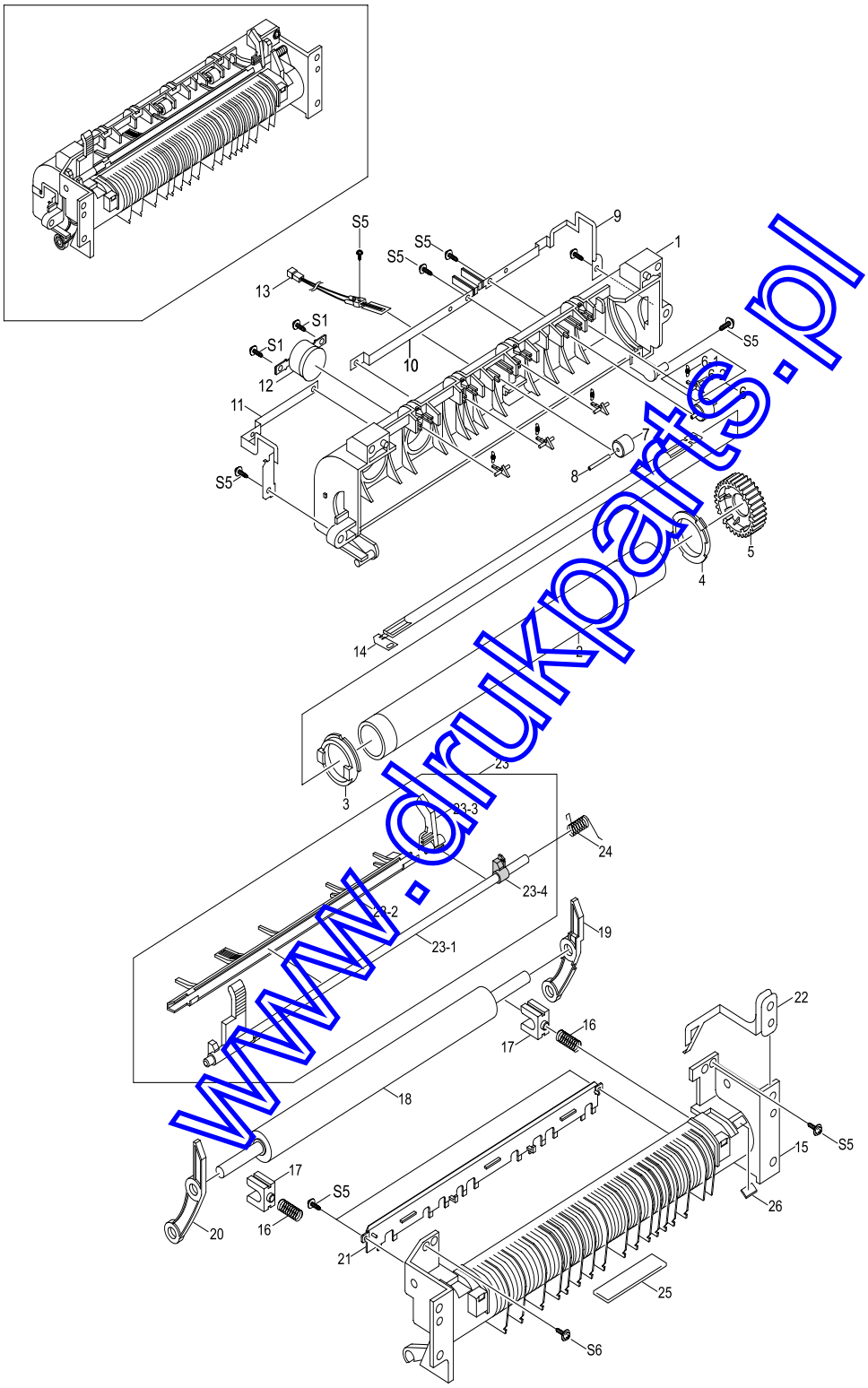

www.drukparts.pl

FuserAss'y Parts List

(SA. : Service Available)

NO	DESCRIPTION	SEC CODE	Q'TY	SA	REMARK
0	ELA HOU-FUSER(110V)ASS'Y	JC96-02194A	1	O	110V
	ELA HOU-FUSER(220V)ASS'Y	JC96-02178A	1	O	220V
1	PMO-UPPER FUSER	JC72-00812A	1	X	
2	RMO-ROLLER HEAT	JC73-00093A	1	X	
3	PMO-BEARING H/R-F	JC72-00814A	1	X	
4	BEARING-H/R L	JC66-10902A	1	X	
5	GEAR-FUSER	JC66-40913A	1	O	
6	MEA UNIT-CLAW ASS'Y	JC97-01587A	1	X	
6-1	SPRING-SAPERATION	JC61-70909A	4	X	
6-2	PMO-GUIDE CLAW	JC72-00376A	4	X	
7	PEX-ROLLER EXIT F-UP	JC72-20901A	2	X	
8	IPR-PIN ROLLER EXIT	JC70-00064A	2	X	
9	NPR-ELECTRODE GEAR	JC71-00029A	1	X	
10	NPR-ELECTRODE M	JC71-00030A	1	X	
11	NPR-ELECTRODE F	JC71-00028A	1	X	
12	THERMOSTAT	4712-000001	1	O	
13	THERMISTOR-FUSER	JC14-00001A	1	O	
14	LAMP-HALOGEN (110V)	4713-001158	1	O	110V
	LAMP-HALOGEN(220V)	4713-001157	1	O	220V
15	PMO-LOWER FUSER	JC72-00820A	1	X	
16	SPRING-PR	JC61-70908A	1	X	
17	BEARING-PRESSURE/R	JC66-10901A	2	X	
18	RMO-ROLLER PRESSURE	JC73-00094A	1	X	
19	PMO-LEVER JAM R	JC72-00819A	1	X	
20	PMO-LEVER JAM F	JC72-00818A	1	X	
21	PMO-GUIDE INPUT	JC72-00817A	1	X	
22	IPR-GROUND FU	JC70-00259A	1	X	
23	MEA UNIT-ACTUATOR ASS'Y	JC97-01611A	1	O	
23-1	PMO-ACTUATOR EXIT	JC72-00810A	1	X	
23-2	PMO-GUIDE DUPLEX	JC72-00816A	1	X	
23-3	PMO-ARM ACTUATOR	JC72-00811A	1	X	
23-4	GUIDE REMOVE	JC61-00546A	1	X	
24	SPRING-ACTUATOR	JC61-00485A	2	X	
25	LABEL(R)CAV_HOT FU	JC68-30928A	1	X	
26	LABEL(R)-LV FUSER	JC68-00408A	1	X	110V
	LABEL(R)-HV FUSER	JC68-00407A	1	X	220V

O : Service available X : Service not available

www.drukparts.pl

5-14. Screw

NO	SEC CODE	DESCRIPTION	SPEC	
S1	6006-000127	SCREW-ASS'Y MACH	"WS,PH,+,M3,L6,ZPC(YEL),MSWR15"	
S2	6001-000568	SCREW-MACHINE	"PH,+,M3,L8,NI PLT,SM20C,-"	
S3	6002-000175	SCREW-TAPPING	"PWH,+,2,M3,L8,ZPC(YEL),SM20C"	
S4	6002-000351	SCREW-TAPPING	"PH,+,2,M2,L8,ZPC(YEL),SM20C"	
S5	6003-000119	SCREW-TAPTITE	"BH,+,B,M3,L8,CBLACK,SWRCH18A"	
S6	6003-000196	SCREW-TAPTITE	"PWH,+,B,M3,L10,NI PLT,SWRCH18A"	
S7	6003-000198	SCREW-TAPTITE	"PWH,+,B,M3,L12,ZPC(YEL),SWRCH1"	
S8	6003-000221	SCREW-TAPTITE	"PWH,+,S,M4,L8,ZPC(YEL),SWRCH18"	
S9	6003-000266	SCREW-TAPTITE	"PWH,+,S,M3,L6,ZPC(YEL),SWRCH18"	
S10	6003-000269	SCREW-TAPTITE	"BH,+,S,M3,L6,ZPC(YEL),SWRCH18A"	
S11	6003-001256	SCREW-TAPTITE	"BH,+,B,M4,L10,NI PLT,SWRCH18A"	

www.drukparts.pl