Oki Data CONFIDENTIAL

OKI
PRINTING SOLUTIONS

C9600/C9800 Spare Parts Illustration Manual

www.drukparts.pl

07-12-2005 Rev.2

MAIN (42930501)

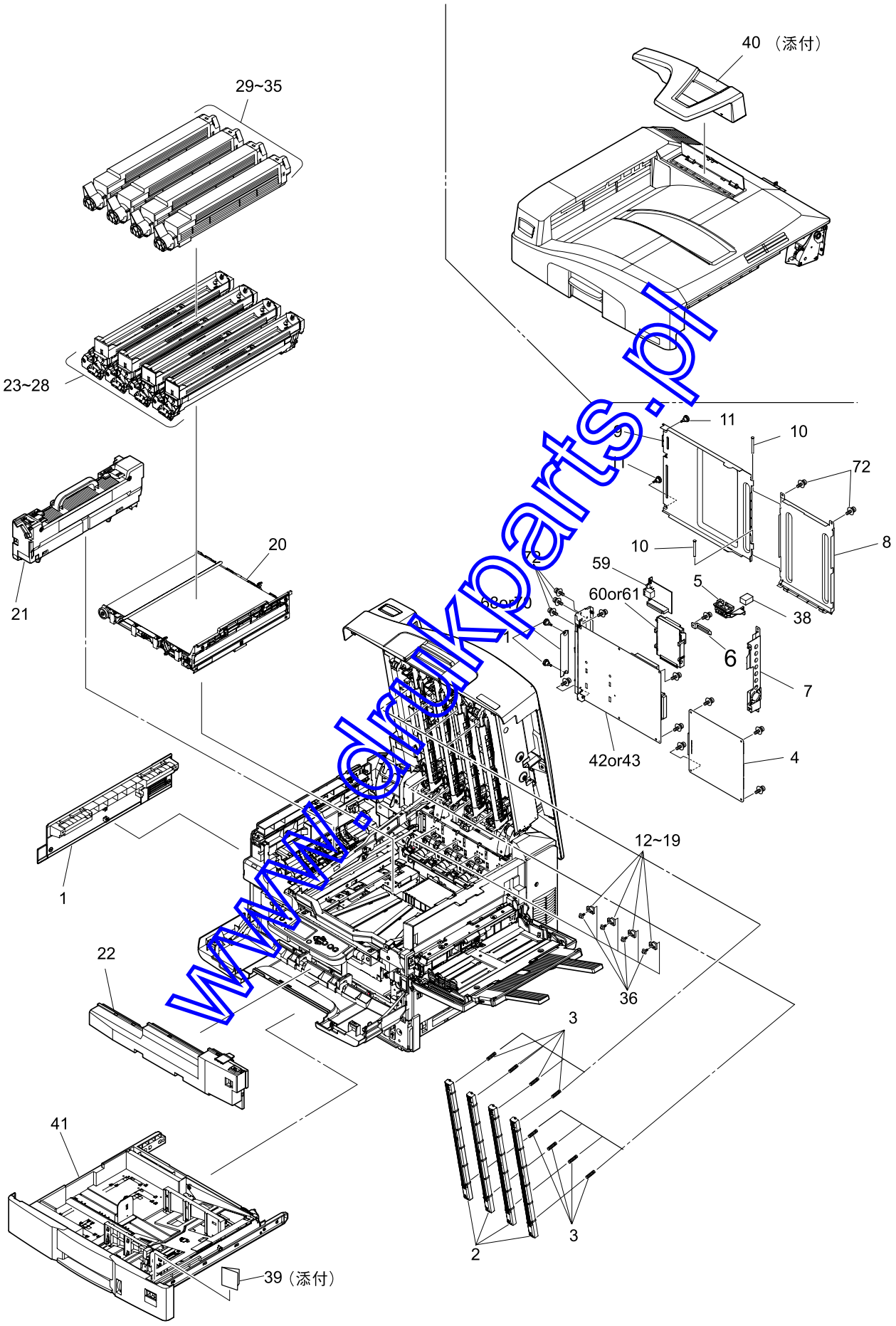

www.drukparts.pl

No.	Parts No.	Name	Remarks
1	42710201	Cover-Blank(Dup)	
2	42580201	LED Head-Unit-53MXF	600dpi
	42579001	LED Head-Unit-63MXF	1200dpi
3	42764301	Spring-Head	
4	42868011	OR-S2V (Eng Board 600dpi)	
	42868013	OR-S2V (Eng Board 1200dpi)	
5	42780701	Code-Clump	
6	42859101	Plate-Clump-HCB	
7	42781301	Plate-Beam	
8	42780901	Plate-Shield	
9	42781101	Plate-Cover	
10		Shaft-Shield	
11		Screw-Knob	
12		Block-Lockout-723	
13		Block-Lockout-723-2	
14		Block-Lockout-723-3	
15		Block-Lockout-723-4	
16		Block-Lockout-723-5	
17		Block-Lockout-723-6	
18		Block-Lockout-723-7	
19		Block-Lockout-723-8	
20	42931601	Belt-Unit-723	
21		Fuser-Unit-723	120V
		Fuser-Unit-723-ODA-230V	230V
22		Box-Waste-Toner	
23-28		ID Unit Type C7 Y	
		ID Unit Type C7 M	
		ID Unit Type C7 C	
		ID Unit Type C7 K	
29-35		Toner-Cartridge Type C7 Y	
		Toner-Cartridge Type C7 M	
		Toner-Cartridge Type C7 C	
		Toner-Cartridge Type C7 K	
36		Cup_Screw (S Tight M3)	
37		Cup_Screw A	
38	43051901	Gasket-HCB	
39	41501901	Indicator-Paper-Size(OKI)	
40	42967901	Stopper-Paper	
41	42703601	Case-Cassette-Assy	
42	42867001	OR-HMO (Main Control Bd)	600dpi
43	42807602	Board-ASP	1200dpi
44		EEPROM(CU)	1200dpi
45	42968801	EEPROM(CU) Key-chip	1200dpi
46	42912201	BIOSROM	1200dpi
47		BT100	1200dpi
48	42010514	Board-OWF	600dpi PS/PCL
49	42010516	Board-OWF	600dpi PCL/Font
50	42630002	Board-HMY	600dpi P2ROM PS/PCL
51	42630004	Board-HMY	600dpi P2ROM PCL/Font
52	42630012	Board-HMY	600dpi P2ROM Font for PS/PCL
53	42314837	Board-Memory 128MB	
54	42314838	Board-Memory 256MB	
55	42314839	Board-Memory 512MB	
56		OkiLAN 510w/MLETB14w	Wireless NIC JPN 600dpi
57	42780601	OkiLAN 510w/MLETB14w	Wireless NIC OEL 600dpi

www.drukparts.pl

58	42825803	OkiLAN 510w/MLETB14w	Wireless NIC ODA 600dpi
59	42921801	OR-HMK Assy (OkiLAN 8200e)	Soft NIC
60	41376039	HDD Assy 20GB for Mainte	C9600
61	42892242	HDD Assy 20GB for Mainte	C9800 GA
	42892252	HDD Assy 20GB for Mainte	C9800 STD
62		Compact Flash	
63		Nyron Stud	
64		Plate-Interface Caulking	600dpi
65		Plate-Interface Caulking	1200dpi
66		Guide-Rail	
67		Plate-Support-PCI	
68		Plate-Blank	600dpi
69		Plate-Blank-N	600dpi/1200dpi
70	42854701	Plate-Blank-W	1200dpi
71	41723901	Screw-Knob	
72		Cup_Screw (S Tight M3)	
73		Screw	
74	42861201	Motor-Fan(CU)	600dpi
75	42861301	Motor-Fan(CU)	1200dpi
76	42925201	Motor-Fan(CU)	1200dpi
77		Bracket-Fan-CU1	600dpi/1200dpi
78		Bracket-Fan-CU2	1200dpi
79		Screw-PSW3	
80	43037901	Gasket-Interface-A	
81	43038001	Gasket-Interface-B	
82		Connector Cover	600dpi
83		EEPROM(CU)	600dpi
84	42887501	Board-BYN	1200dpi MFP
85		0494 001NR	600dpi/1200dpi Fuse(CU board)
86		TFC-20/TFT-102010N (Core of LAN cable)	600dpi/1200dpi JPN/AOS

www.drukparts.pl

Printer-Unit(42692501) 1/2

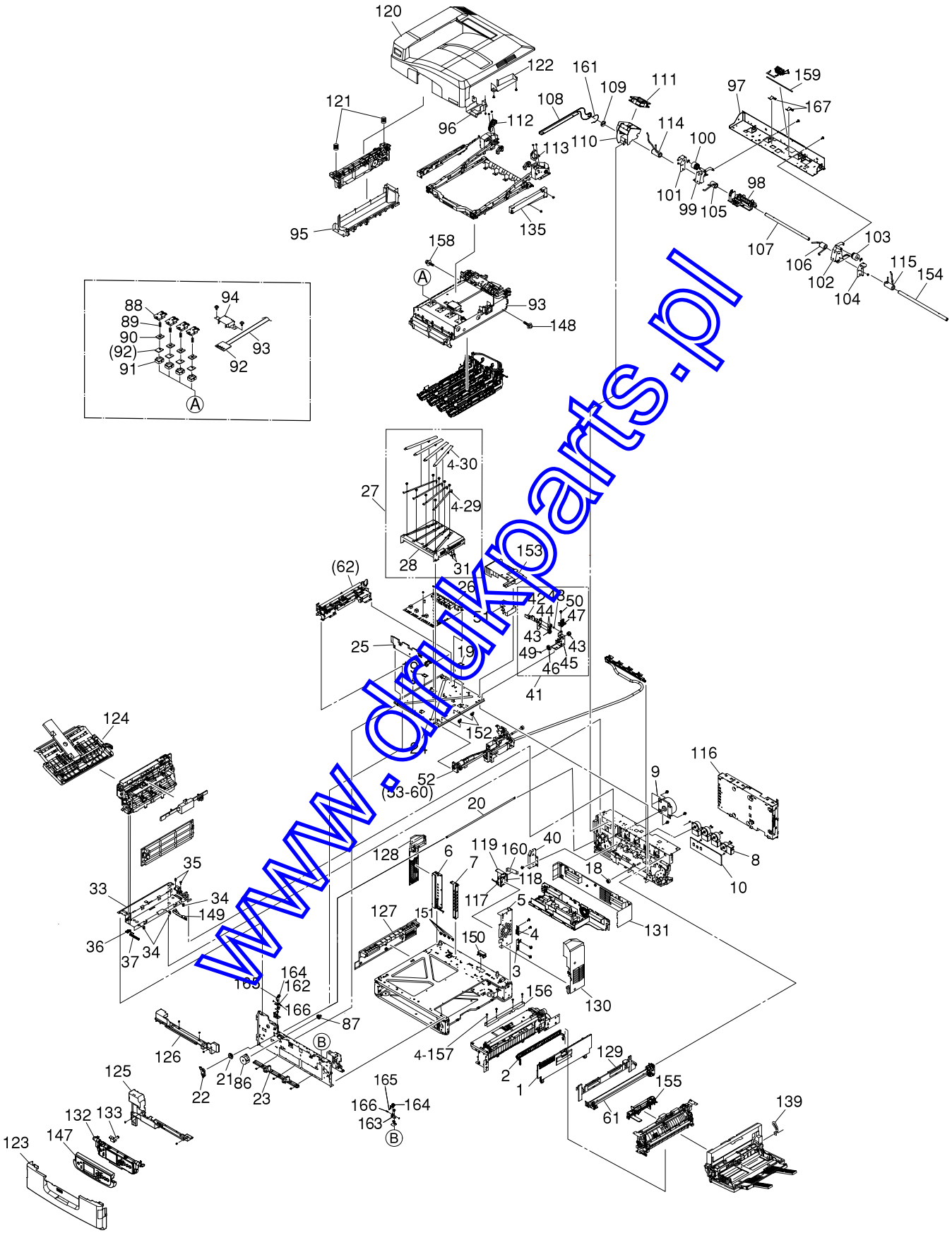

www.dukparts.pl

Printer-Unit(42692501) 2/2

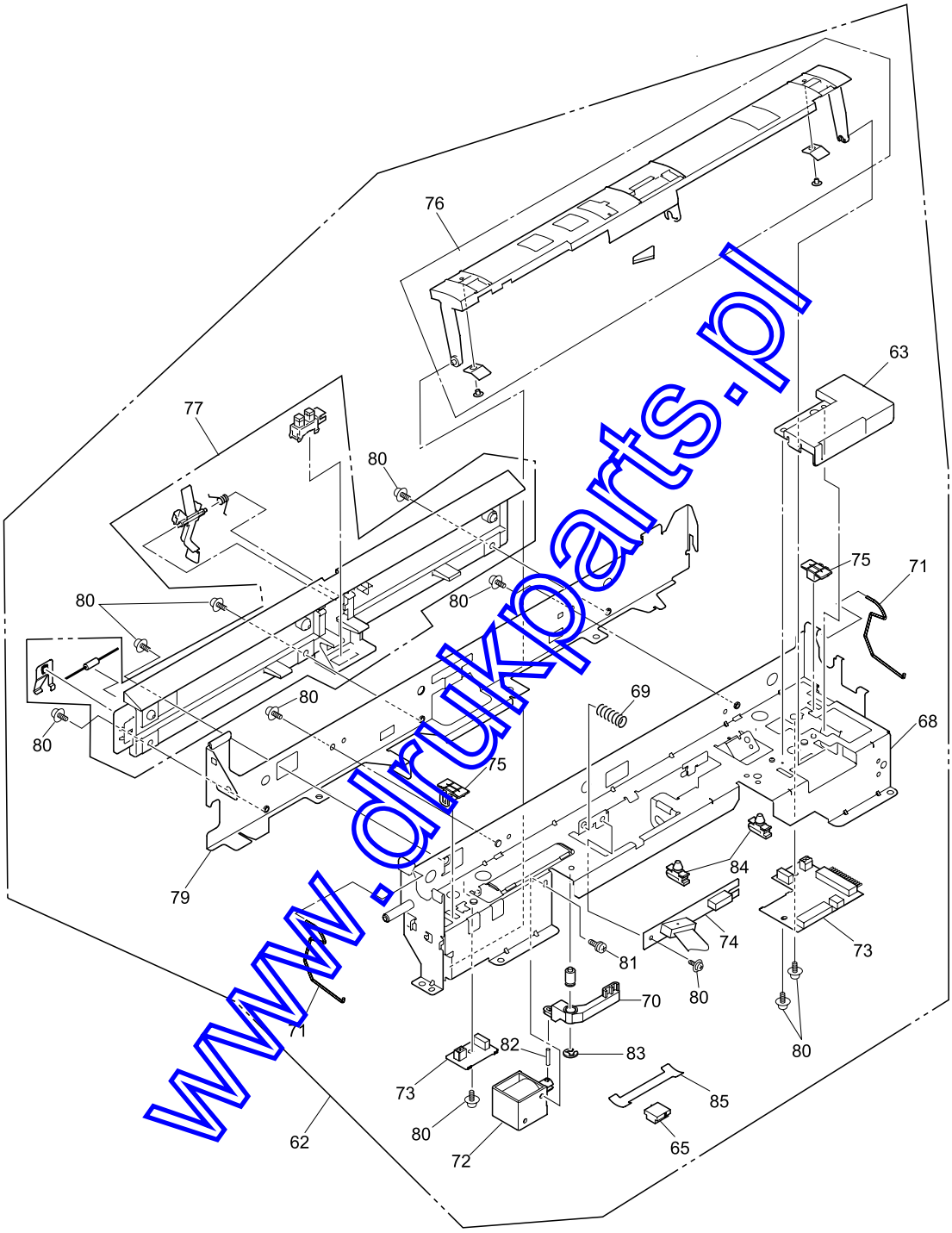

www.drukparts.pl

No.	Parts No.	Name	Remarks
1	42702301	Cover-Guide-1st-Assy	
2	42702701	Guide-Paper	
3		Plate-Stay-A	
4		Plate-Stay-B	
5	42720801	Plate-Support-A	
6	42720901	Plate-Support-B-Assy	
7	42721101	Plate-Support-C	
8	42985001	Motor-DC(ID)	
9	42864302	Motor-DC(FUSER)	
10	42868111	OR-S2M (Motor Driver Bd)	Motor Driver Board
11		CONN Cord-HIROSE6P-H2P,H4P	
12		CONN Cord-JST2P-JST2P	
13		CONN Cord-AMP11P-AMP11P	
14		CONN Cord-AMP4P-AMP4P	
15		CONN Cord-JST5P-JST4P	
16		TW-VF-16-0.1X0.8-420 CONN PAR- -	
17		SMCD-40-160BD(1.0) CONN PAR- -	
18		SMCD-30-160BD(1.0) CONN PAR- -	
19	42930001	Film-Guide FFC	
20	42736301	Shaft-LiftUp	
21	42060701	Bush	
22		Planet Assy.-F	
23	42705901	Frame-Holder	
24		Plate-HV-Base	
25	42737101	Bracket-HV-Assy	
26	42426501	PWR unit-(HIGH VOLTAGE)	
27	42737601	Cover-HV- Assy.-	Assy(Include:No.28-32)
28		Cover-HV	
29		Contact-TR	
30		Cover-Contact-TR	
31	42738001	Spring-Fuse-Belt	
32		TappingScrew-B2 L=8	
33		Plate-Heat	
34		Clamp-Cable	
35		Stad-Shoulder	
36	40135301	Photo-Interrupter	
37		Cover-Cable-Heat A	
38		CONN Cord-JST4P-JST4P	
39		CONN Cord-JST12P-JST6P,JST7P	
40		Plate-Guide-ID	
41	42738501	Gear-Duct-ID-Assy	Assy(Include:No.42-50)
42		Bracket-D-Caulking	
43		Gear-Bevel	
44		Gear-Idle-D	
45		Bracket-B-Caulking	
46		Gear-Idle	
47		Holder-Hall-Duct	
48		Ring	
49		Ring	
50		Cup_Screw (S Tight M3)	
51	42742801	Guide-Tube-L	
52	42967301	Duct-Gear-Assy	Assy(Include:No.53-60)
53		Duct- Assy.-Toner	

www.drukparts.pl

54		Plate-BKT-Duct A Caulking	
55		Plate-BKT-Duct B	
56		Gear-Reduction-Tube	
57		Gear-Idle-BBD	
58		Gear-Idle-D	
59		Gear-WT-Z20-Z21	
60		Cup_Screw (S Tight M3)	
61	42749801	Plate Assy.-MPT Lock	
62	42754701	Sensor-Regist- Assy.	Assy(Include:No.63-67)
63		Cover-Connector	
64	42646501	CONN Cord-AMP2P-AMP2P	
65		292254-2 Connector-Plug-	
66	42644601	CONN Cord-AMP14P-AMP14P	
67	42978901	Sensor-Regist-Sub-Assy	Assy(Include:No.68-85)
68		Plate-Po-Caulking	
69		Spring-Shutter	
70		Lever-Solenoid	
71		Spring-Belt-Fix	
72	42755801	DC-Solenoid	
73	42888701	OR-S2Z (Reg Sensor Bd)	
74		GP2TC2 SENSOR-Dencity -	
75		Plate-Guard-Sensor	
76	42755401	Shutter- Assy.-	
77	42811301	TARUMI-Sensor Assy.-	
78		CONN Cord-AMP12P-MOLEX5P,AMP3P,AMP3P(	
79		Plate-Beam	
80		Cup_Screw (S Tight M3)	
81		Screw (SW+W)	
82		Pin	
83		Ring	
84		Clamp-Cable	
85		Film-Cable-Guide	
86	42756901	Motor-Pulse-Belt	
87	42757001	Gear-Idle-Belt	
88		Holder-ANT	
89	42762701	Spring-ANT	
90		Bracket-ANT	
91		Cover-ANT	
92	42459201	RFID read witer system(incorprated type)	
93		SMCD-9-560BD(1.0)CONN PAR- -	
94		Plate-Shield-RFID	
95	42707001	Cover Assy.-Top(Sub)	
96	42707301	Cover-Duct(L)	
97		Plate-Shaft Base	
98		Code-Guide	
99	42734101	Plate-Damper-TCL-Caulking	
100	42836102	Damper-L	
101	42768001	Plate-Damper-TCL-SUB	
102	42734401	Plate-Damper-TCR-Caulking	
103	42836202	Damper-R	
104	42768101	Plate-Damper-TCR-SUB	
105		Spring-Torsion-Top-L	
106		Spring-Torsion-Top-R	
107	42767901	Shaft-Top	
108	42707401	Plate-Support(Top)	

www.drukparts.pl

109		Collar	
110	42707601	Frame-Duct	
111	42781701	Motor-Fan	
112		Gear-BKL2	
113		Gear-BKR2	
114		Spring-Torsion-BAS-L	
115		Spring-Torsion-BAS-R	
116	42780001	Plate-Shield-Box- Assy.	
117	42781501	Holder-Duct-FAN-PCB	
118	42781701	Motor-Fan	
119	42781601	DUCT-FAN-PCB	
120	42708001	Cover Assy.-Top	
121	42708401	Spring-Comp(Joboff)	
122		Cover-Duct(R)	
123	42708601	Cover Assy.-Front	
124	42709001	Cover Assy.-FU	
125	42709401	Cover-Guard(L)	
126	42709501	Cover-Guard(Front)	
127	42709701	Cover-Side(L)	
128	42709801	Cover-Side(L)Rear	
129	42709901	Cover-Side(R)	
130	42710001	Cover-Side(R)Rear	
131	42710101	Cover-Rear	
132	42706001	Cover Assy.-OP Panel	
133	42706701	Film-FG	
134		TW-VF-6-0.1X0.8-930 CONN PAR- -	
135	42919201	Guard-R	
136		Cup_Screw (S Tight M3)	
137		Cup_Screw A	
138		TappingScrew-B2 L=8	
139		Stay-Rear-MPT	
140		Ring	
141		Ring	
142		SMCD-20-370-AD-P1.0 CONN PAR- -	
143		CONN Cord-AMP10P-AMP9P	
144		292254-9 Connector-Plug-	
145		CONN Cord-JST3P-JST3P	
146	42970901	OR-HAL (Toner SNS PWB)	
147	42706101	Cover-OP Panel	
148		Limiter-Screw	
149		Cover-Cable-Heat-F	
150		Guide-Cable_CU	
151		Clamp-Cable	
152		Clamp-Cable	
153	42914601	Cover-Middle	
154		Shaft-Cover	
155		Cover-Snsor(S2S)	
156		Plate-Support	
157		Cup_Screw A	
158		Limiter-Screw	
159		Code-Guide-Receive	
160		Plate-FG-Rear	
161	43052901	Spring-Torsion-FG	
162		Plate-Holder-Detent-L	
163		Plate-Holder-Detent-R	

www.drukparts.pl

164		Lever-Detent	
165		Spring-Detent	
166		Post-Detent	
167		Plate-FG-T-Shaft	

www.drukparts.pl

Plate-Assy-Power (42703201)

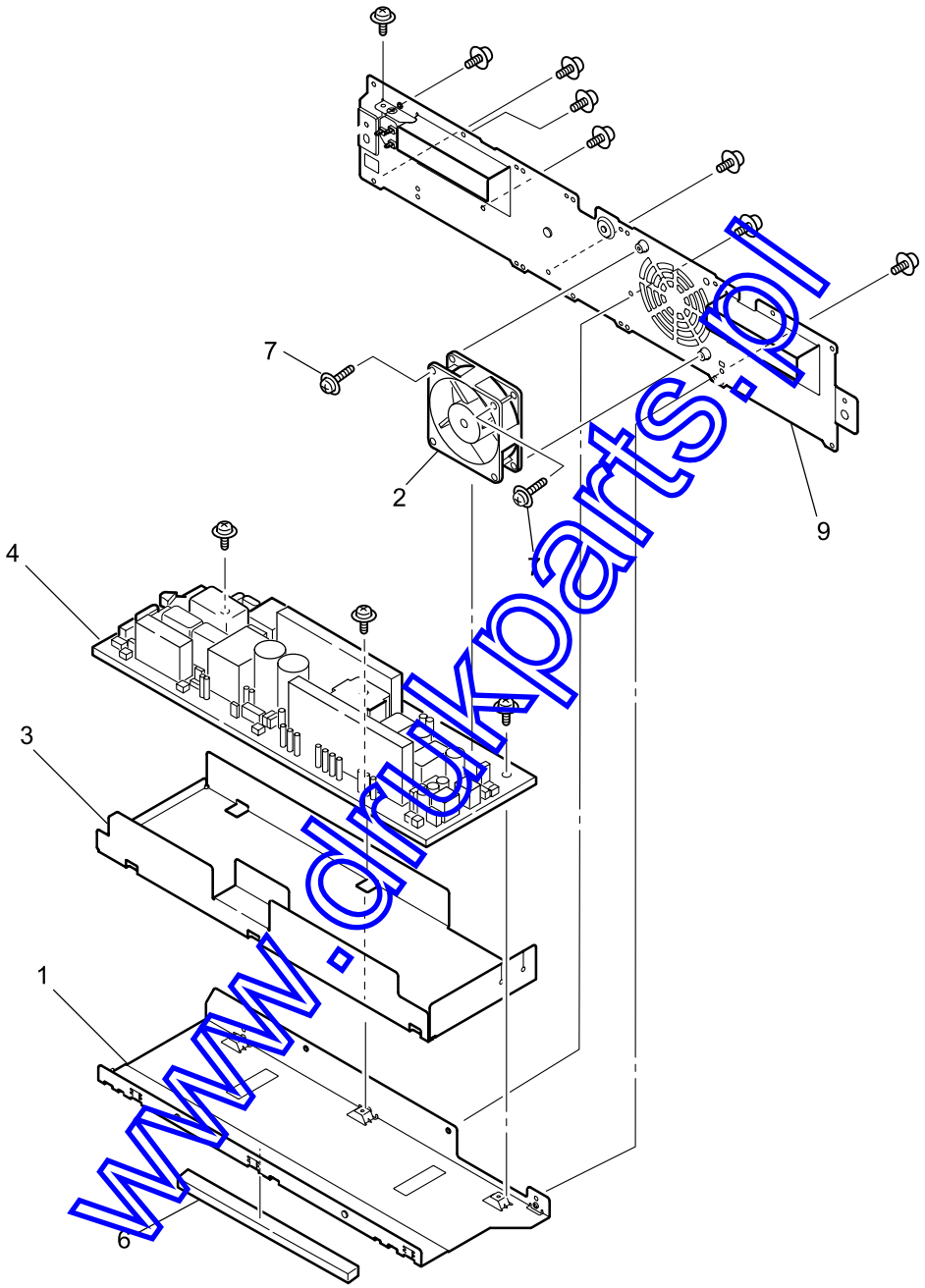

www.dnkparts.pl

No.	Parts No.	Name	Remarks
1	42703301	Plate-Power	
2	42703401	Motor-Fan	
3		Film-Insulation	
4	42463101	PWR unit-ACDC Switch	100/120/230V
5		Cup_Screw (S Tight M3)	
6		Gasket	
7		Screw (SW+2W)	
8		Screw (SW+2W)	
9		Plate-Rear-Base-Caulking	
10		Cup_Screw A	

www.drukparts.pl

Base-Assy (42692601) 1/2

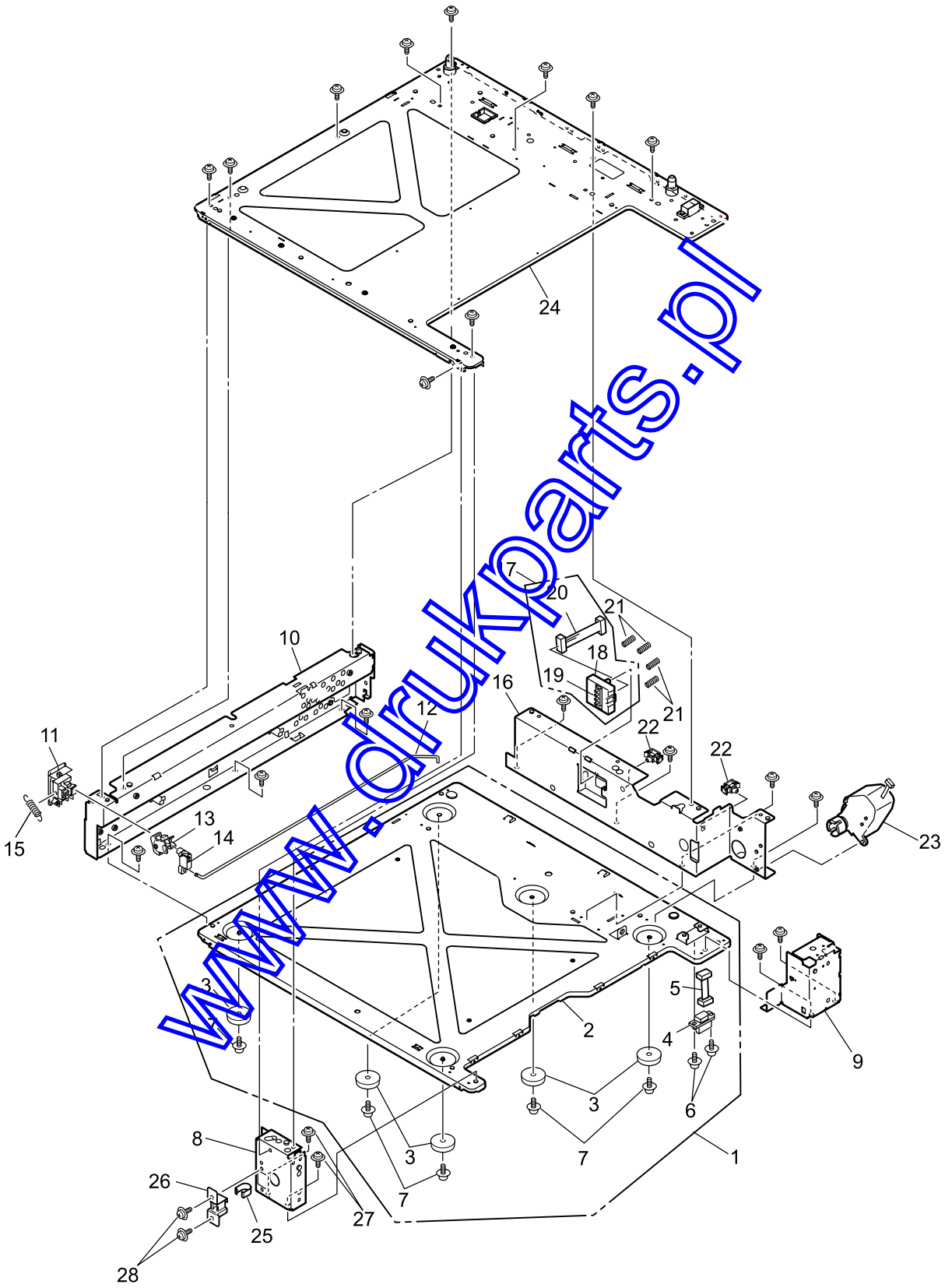

www.drukparts.pl

Base-Assy (42692601) 2/2

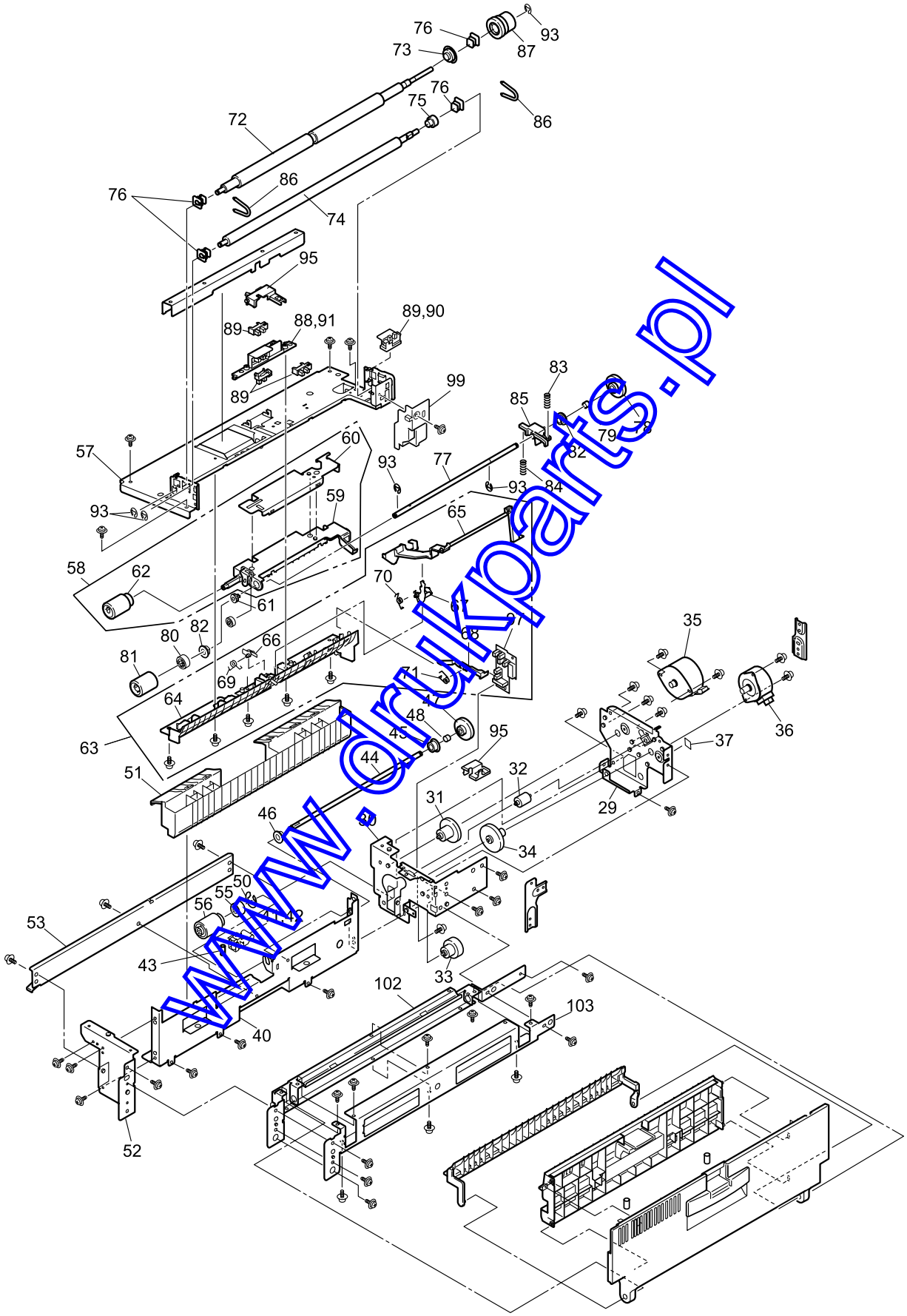

www.drukparts.pl

No.	Parts No.	Name	Remarks
1	42692801	Plate Assy.-Bottom	Assy(Include:No.2-7)
2		Plate-Bottom	
3		Rubber-Foot	
4		IMSA-9714N-14Z02 Connector-SQR -	
5		CONN Cord-JST10P,AMP4P-AMP7PX2	
6		Cup_Screw A	
7		Cup-Screw-E L=6	
8		Pillar-F	
9		Pillar-R	
10		Plate-Stay-Caulking	
11	42693501	Cover-switch	
12	42693601	Shaft-Switch	
13	42693701	Switch-AC	
14	42693801	Link-Switch	
15	42865201	Spring-Switch	
16		Plate-Rear	
17	42694101	Sensor Assy.-	Assy(Include:No.18-20)
18		Holder-PS-Switch	
19		HS12-0001 Switch-Push -	
20		CONN Cord-AMP5-AMP5P	
21		Spring-PS	
22		Clamp-Cable	
23	42694601	Geard-Motor(1st)	
24		Plate-Top-Welding	
25		Plate-Rock	
26	42695101	Lock-Cassette	
27		Cup_Screw (S Tight M3)	
28		Cup_Screw A	
29		Plate-Motor-A	
30		Plate-Motor-B	
31	42695701	Gear-Hopping-Z68-19	
32	42695801	Gear-Idle-Retard	
33	42695901	Gear-Feed-Z53-18	
34	42696001	Gear-Idle-Z48	
35	42629401	Motor-Pulse-Fuser	
36	42890201	Motor-Pulse-Regist	
37		Clamp-Cable	
38		CONN Cord-AMP8P,JST4P,AMP4P	
39		Cup_Screw (S Tight M3)	
40		Plate-Retard-Caulking	
41		Lever-Retard	
42		Holder-Spring	
43		Spring-Retard	
44		Shaft-Retard	
45		Bearing-Metal	
46		Bearing-Metal	
47	42698001	Gear-Z38(oneway)	
48		Collar	
49		Pin-Spring	
50		Ring	
51	42698201	Guide-Paper-Lower	
52		Plate-Retard-F	
53		Plate-Rail-R	
54		Cup_Screw (S Tight M3)	

www.drukparts.pl

55		Torque-Limiter-OTLV	
56	41766501	Roller-Feed	
57		Plate-Feed	
58	42699001	Roller Assy.-Pick-Up	Assy(Include:No.59-62)
59		Frame-PickUp	
60		Plate-PickUp	
61	42832201	Gear-Idle-Z20	
62	42699401	Roller-Pick-Up	
63	42699601	Frame Assy.-Feed	Assy(Include:No.63-71)
64	42699701	Frame-Feed	
65		Lever-End	
66		Lever-Regist	
67		Lever-Hopping	
68		Lever-Near-End	
69		Spring-Lever-Regist	
70		Spring-Lever-Hopping	
71		Spring-Near-End	
72	42700601	Roller-Regist1	
73	40301801	Gear-Regist	
74	42700801	Roller-Pressure1	
75		Gear-PRB	
76		Bearing-Regist	
77		Shaft-Feed	
78	42698001	Gear-Z38(oneway)	
79		Collar	
80		Gear-Feed	
81	43000601	Roller-Feed	
82		Bearing-Metal	
83	42701501	Spring-PickUp	
84	42701601	Spring-Release	
85		Lever-Release	
86	42701801	Spring-Regist	
87	42863401	Gear-Assy-Clutch	
88		Holder-Photo-Sensor	
89	40135301	Photo-Interrupter	
90		Holder-Co-Sensor	
91		CONN Cord-AMP9P-AMP3PX3	
92		TappingScrew-B2 L=8	
93		Ring	
94	42999001	Spring-FG-CL1	
95		Holder-PESNS	
96		AMP3P-AMP3P CONN Cord-Wire	
97	42868401	OR-S2C (Entrance SNS Bd)	
98	42646301	CONN Cord-AMP10P-AMP10P	
99	42703101	Cover-SNS	
100		Cup_Screw (S Tight M3)	
101		BU03P-TR-PC-H(LF) Connector-Plug-	
102		Plate-Grip	
103		Plate-Grip-Sub	
104		Cup_Screw (S Tight M3)	
105		Cup_Screw A	
106		Cup_Screw (S Tight M 3)	
107	42931801	Roller-set-723	
108		Roller-set-723	
109		Roller-set-723	
110		Roller-set-723	

www.drukparts.pl

Side-R-Assy (42721201)

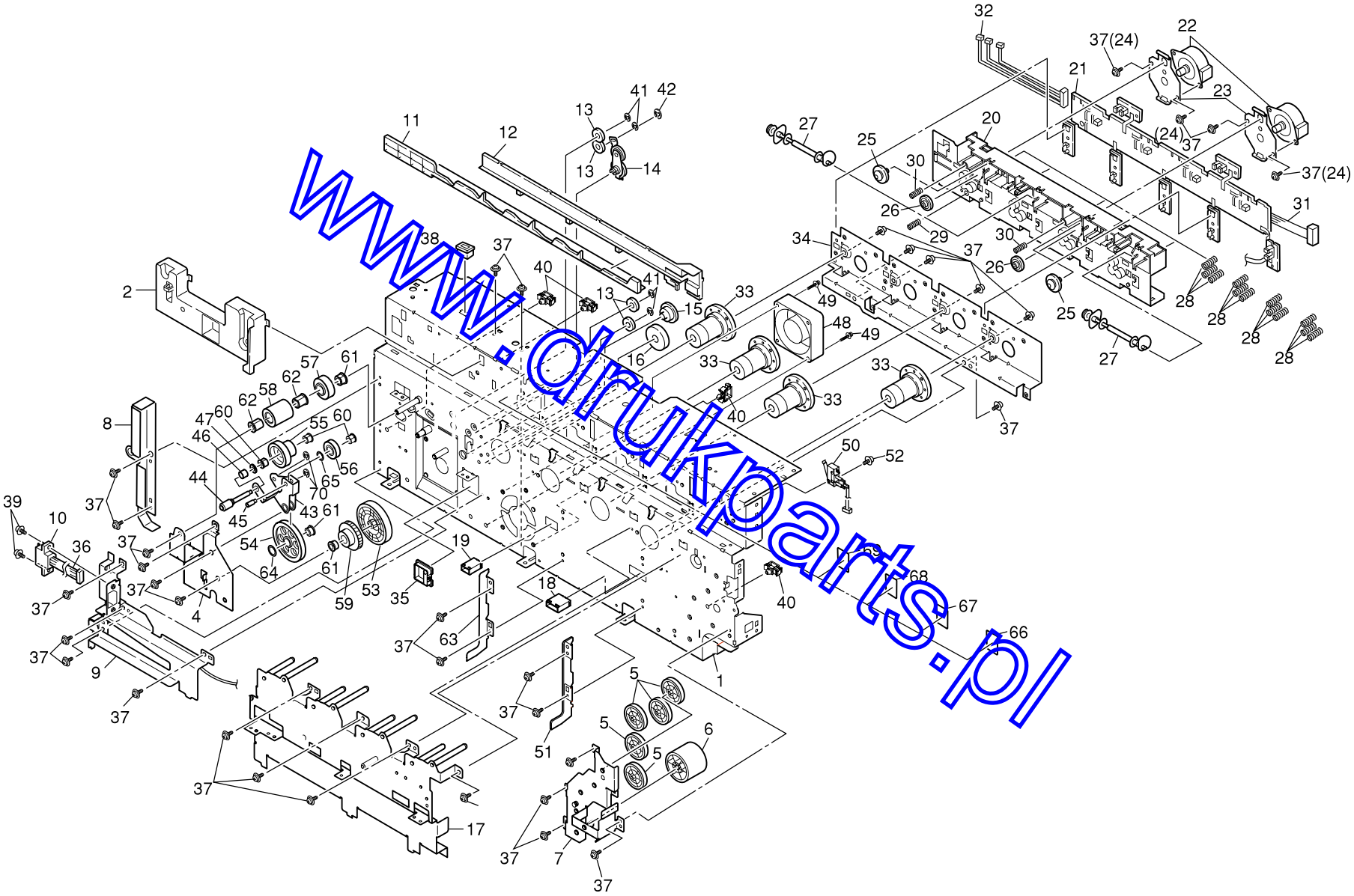

www.drukparts.pl

No.	Parts No.	Name	Remarks
1		Plate-Side-R-Caulking	
2	42839601	Guide-Bracket-FU	
3	42724101	Gear-Z17-FU	
4		Plate-BKT-Fuser	
5	42724601	Gear-idle(Z39)	
6	42724801	Gear-Idle(Z44)	
7		Plate-Side(RER)Caulking	
8		Plate-Stacker-Rear	
9		Plate-Rail-Rear	
10		IMSA-9714N-14Z02 Connector-SQR -	
11		Slider-Liftup-R	
12		Holder-Slider-R	
13	42730101	Gear-Idle-Link	
14		Planet Assy.-R	
15	42828301	Gear-Idle-Liftup-Z20-30	
16	42730701	Gear-Idle-Lift-UP-Z37	
17		Bracket-Inner-Caulking	
18		Guide-Cable-A	
19		Guide-Cable-B	
20		Guide-Rear	
21	42868301	OR-SGG (ID System SNS PWB)	
22	42863901	Motor-Pulse(Toner-Shutter)	
23	42732501	Plate-Motor	
24		Cup_Screw (S Tight M3)	
25		Gear-Z14-42	
26		Gear-Z14-35	
27		Camshat	
28		Spring-ID-Fuse	
29		Spring-FG	
30	43027601	Spring-Press-FG	
31		CONN Cord-JST9P-AMP3P,JST3PX2	
32		CONN Cord-JST24P-JST24P	
33	42960701	Gear-Idle-Drum	
34		Plate-Bracket-Outer	
35	42734701	Guide-Cable-FU	
36		CONN Cord-AMP13P-AMP7P,AMP7P	
37		Cup_Screw (S Tight M3)	
38		292254-3 Connector-Plug-	
39		Cup_Screw A	
40		Clamp-Cable	
41		Ring	
42		Ring	
43		Plate-Planet	
44		Post-Planet-A	
45		Post-Planet-B	
46		Spring-Planet	
47		Washer	
48	42743801	Motor-Fan	
49		Screw (SW+2W)	
50	42983401	CONN Cord-JST5P-SW	
51		Plate-Support-D	
52		Screw-PSW2W2-10C	
53	43049801	Gear-Z77-FU	
54	43049901	Gear-Z47-FU	
55	43050001	Gear-Z14-Z24-FU	

www.drukparts.pl

56	43050101	Gear-Planet-Z16-FU	
57	43050201	Gear-Z20-FU	
58	43050301	Gear-Z17-FU	
59	43050401	Gear-Z16-FU	
60		Bush-4	
61		Bush-6	
62		Bush-6	
63		Plate-Support-D2	
64		Spacer-Coupling(STW8.0-0.13)	
65		Spacer-Coupling	
66		Label-ID-Position	
67		Label-ID-Position-Y	
68		Label-ID-Position-M	
69		Label-ID-Position-C	

www.drukparts.pl

Side-F-Assy (42734801)

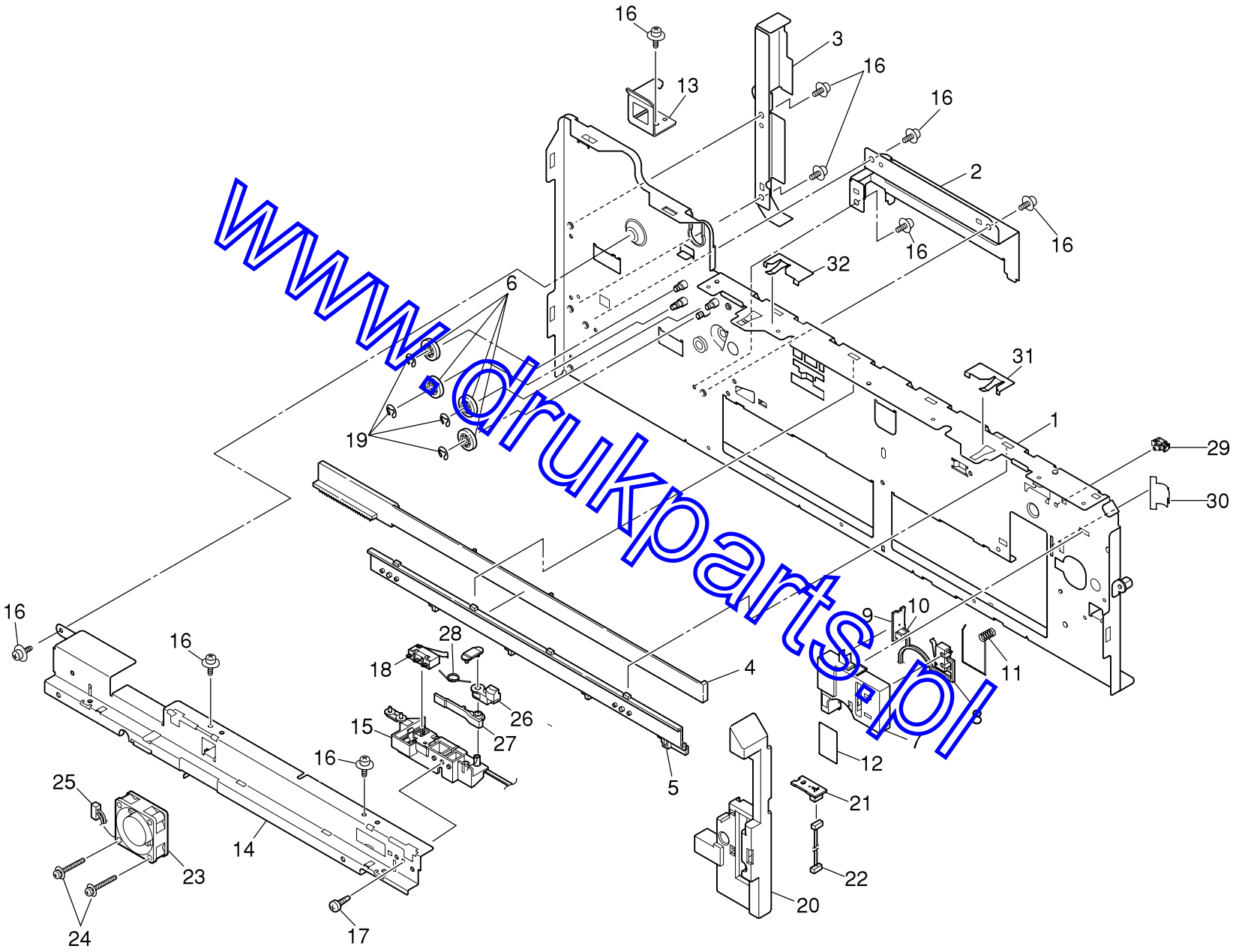

www.drukparts.pl

No.	Parts No.	Name	Remarks
1		Plate-Side-F-Caulking	
2		Plate-Rail-Front	
3		Plate-Sracker-Front	
4		Slider-LiftUP-F	
5		Holder-Slider-F	
6	42730101	Gear-Idle-Link	
7		Bracket-Sensor-	
8	42650501	CONN Cord-AMP2P-SW	
9	42970901	OR-HAL	
10		CONN Cord-AMP3P-JST3P	
11	43056301	Spring-FG-SW-F	
12		Label-Cover-OPT	
13		Plate-Guide(L)	
14		Plate-Base(OP)	
15		Holder-Cover-Open-SW	
16		Cup_Screw (S Tight M3)	
17		TappingScrew-B2 L=8	
18	42538001	CONN Cord-JST2P-SW	
19		Ring	
20	42709601	Cover-Guard(R)	
21	42970901	OR-HAL	
22		CONN Cord-JST6P-JST3PX2	
23	42763302	Motor-Fan	
24		Screw (SW+2W)	
25		BU03P-TR-PC-H(LF) Connector-Plug-	
26	43048901	Lever-Co-A	
27	43049001	Lever-CO-B	
28		Spring-Torsion-CO	
29		Clamp-Cable	
30		Clamp-Cable-Film	
31		Plate-FG-Top-F-A	
32		Plate-FG-Top-F-B	

www.drukparts.pl

Duct-Drive-Assy (42740001)

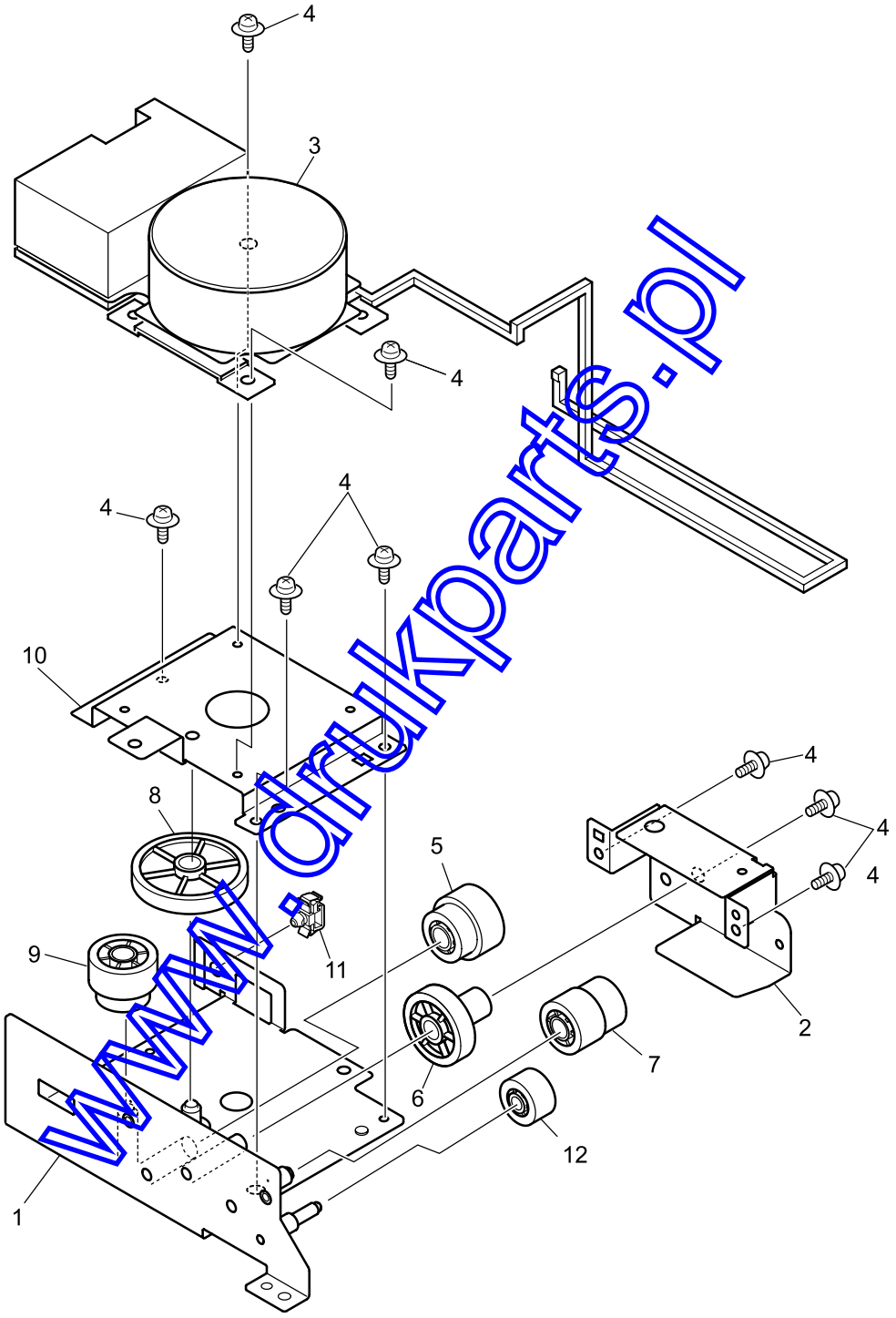

www.drukparts.pl

No.	Parts No.	Name	Remarks
1		Plate-Bracket-Motor Caulking	
2	42978601	Plate-Motor-Sub	
3	42892401	Motor-DC(DISTONER)	
4		Cup_Screw (S Tight M3)	
5	42913701	Gear-WT-Z18-Z20	
6	42978701	Gear-WT-Z30	
7	42913901	Gear-WT-Z15-Z21	
8	42914301	Gear-WT-Z56	
9	42914401	Gear-WT-Z18-Z25	
10		Plate-Motor-DC	
11		Clamp-Cable	
12	42967201	Gear-WT-Z14	

www.drukparts.pl

FDR-Unit-Regist (42743001)

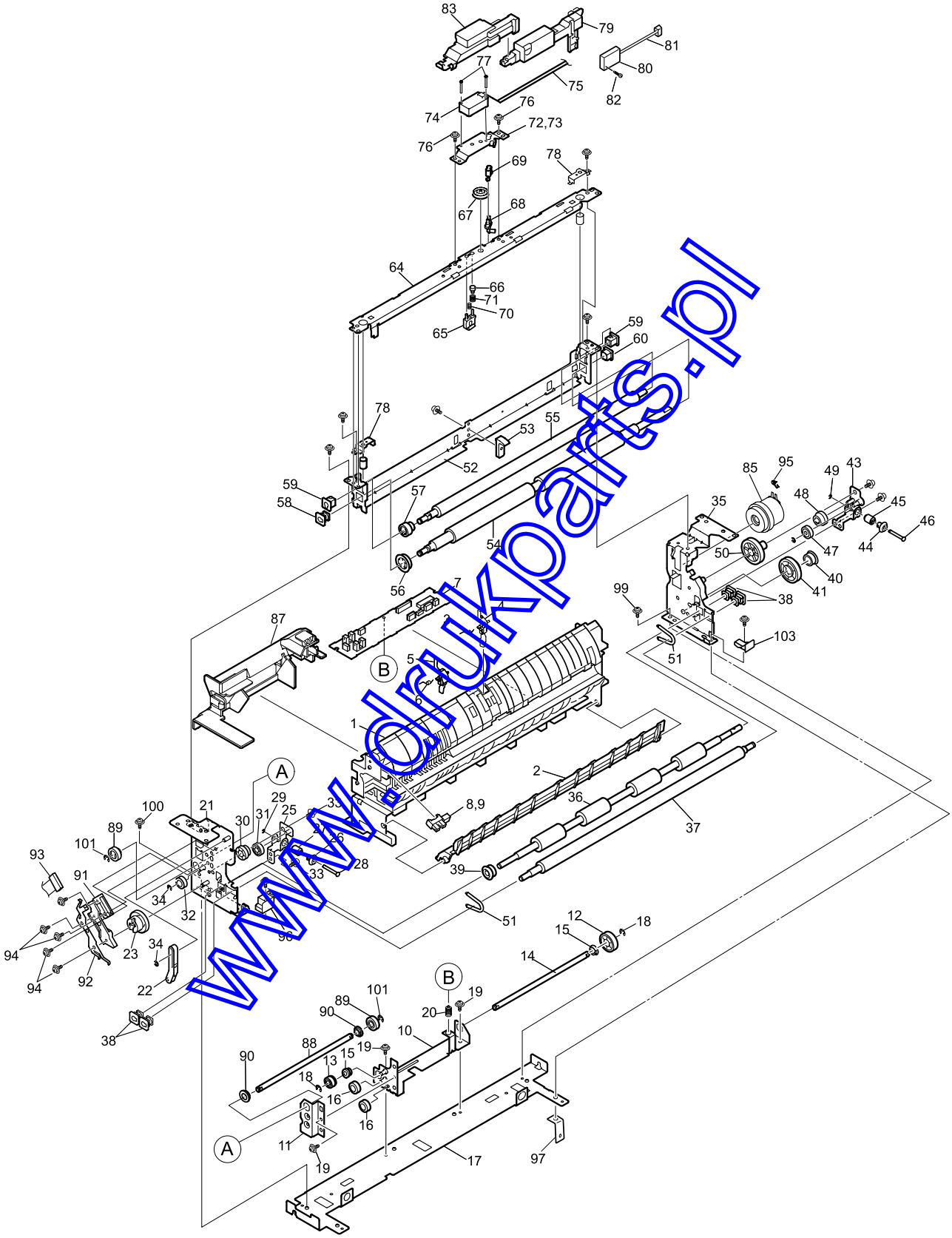

www.drukparts.pl

No.	Parts No.	Name	Remarks
1		Frame-Regist	
2		Guide-Regist	
3		Spring-Torsion(IN2)	
4		Lever-Sensor(IN2)	
5		Lever-Sensor(WR)	
6		Spring-Torsion(WR)	
7		OR-S2S (Paper Size PWB)	
8	40135301	Photo-Interrupter	
9		CONN Cord-AMP3P-AMP3P	
10		Plate-BKT-Connect A Caulk	
11		Plate-BKT-Connect B	
12	42978801	Gear-Connection-Z21	
13	42913101	Gear-Connection-Z14	
14	42913201	Shaft-Connection A	
15		Bush	
16	42739201	Gear-Idle-D	
17		Plate-Base	
18		Ring	
19		Cup_Screw (S Tight M3)	
20	42973801	Spring-Earth(S2S)	
21		Plate-Front(Regist)Caulking	
22		Stay-MPT	
23	42859601	Gear-Coupling-A-Assy	
24	42973101	Plate Assy.-Link(Front)	Assy(Include:No.25-29)
25		Plate-Link(Front)-Caulking	
26		Gear-Bevel(Z14)	
27		Gear-Worm(P2)-Front	
28		Shaft-Warm	
29		Ring	
30	42745001	Gear-Wheel(Z30)-Front	
31	42746301	Gear-Idle(Z16)	
32	42739201	Gear-Idle-D	
33		Cup_Screw (S Tight M 3)	
34		Ring	
35		Plate-Rear(Regist)Caulking	
36	42747201	Roller-Feed(M)	
37	42747301	Roller-Pressure(M)	
38	42804602	Bearing-Regist	
39		Gear-OnewayBevel(Z30)	
40	42747402	Gear-OnewayBevel(Z20)	
41	42747601	Gear-Feed-Z36	
42	42973701	Plate Assy.-Link(Rear)	Assy(Include:No.43-49)
43		Plate-Link(Rear)Caulking	
44		Gear-Bevel(Z14)	
45		Gear-Worm(P2)-Rear	
46		Shaft-Warm	
47		Gear-Idle(Z16)	
48		Gear-Wheel(Z30)-Rear	
49		Ring	
50	42745801	Gear-Idle(Z37)	
51		Spring-Pressure	
52		Plate-Holder(Regist)	
53	42943901	Stage-Pickup 723	
54	42747901	Roller-Regist(2)	

www.drukparts.pl

55	42748001	Roller-Pressure(2)	
56	40301801	Gear-Regist	
57	41066801	Gear-PRB	
58	42804602	Bearing-Regist	
59	42948001	Bearing-Regist2	
60	43012601	Bearing-Regist(CL2)	
62		Cup_Screw (S Tight M3)	
63		Ring	
64		Plate-Top(Regist)Caulking	
65	42943801	Lever-Pickup 723	
66		Gear-SH1	
67		Gear-SH2	
68		Gear-SH3	
69		Cap-SH	
70		Spring-SH1	
71		Spring-SH2	
72		Spring-Detent-Re	
73	42749501	Plate-Thickness	
74		D6E-K SENSOR-Magnet -	
75		CONN Cord-AMP4P-JST3P	
76		Cup_Screw (S Tight M3)	
77		Screw	
78	42944101	Plate-Pressure	
79	42749601	Cover-Thickness	
80		HSU-06A1T1 SENSOR-Temp -	
81	42533701	CONN Cord-JST4P-JST4P	
82		TappingScrew-B2 L=8	
83	42997601	Cover-Thickness(Front)	
84		Cup_Screw (S Tight M 3)	
85	43003201	Gear Assy.-CL(Reg2)	
86		Pin	
87	42743701	Duct-Fan	
88		Shaft-Connection A	
89	42913401	Gear-Connection-Z18	
90		Bush	
91		Bracket-Contact	
92		Plate-FG-REG	
93		MRH9355/HV-38-100MKRES-MET solid -	
94		TappingScrew-B2 L=8	
95		Spring-FG(CL)	
96		Spacer-Lock-F	
97		Plate-Support	
98		Cup_Screw (S Tight M3)	
99		Cup_Screw A	
100		TappingScrew-B2 L=8	
101		Ring	
102		Ring	

www.drukparts.pl

FDR-Unit-MPT (42757101PA)

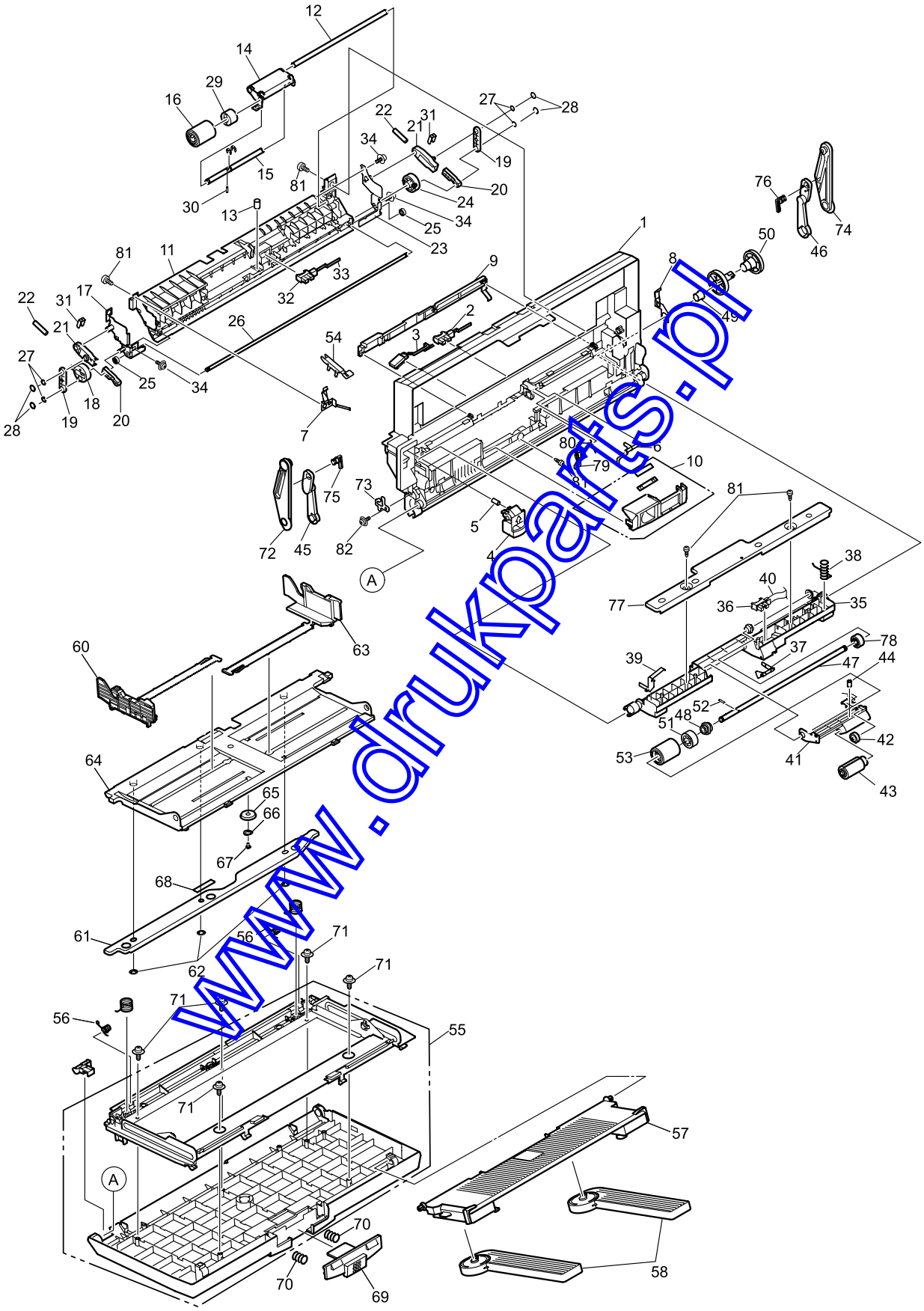

www.drukparts.pl

No.	Parts No.	Name	Remarks
1	42750501	Frame-MPT	
2	40135301	Photo-Interrupter	
3	41842802	Photointerrupter(REWORK)	
4		Lever-Handle-MPT	
5		Spring-Handle	
6	42750801	Lever-Hopping	
7		Plate-Earth(MPT)Front	
8		Plate-Earth(MPT)Rear	
9	42751001	Cover-Sensor(MPT)	
10	43012701	Guide Assy.-Friction	
11	42751201	Guide-Sheet(MPT)	
12	42751301	Shaft-Retard(Drive)	
13		Spring-Reatrd	
14		Plate-Retard	
15		Shaft-Retard(Driven)	
16	43013001	Roller-Feed	
17		Plate-Arm(Front)Caulking	
18		Gear-Link(Z27)Front	
19		Lever-Link	
20		Lever-Arm	
21		Holder-Arm	
22		Spring-Arm	
23		Plate-Arm(Rear)Caulking	
24	42810001	Gear-Link(Z27)Rear	
25	42961501	Gear-Link-Z12	
26		Shaft-Link	
27		Spacer-Coupling	
28		CS-RING (CS3-SUS)	
29	42988601	Torque-Limiter-OTLV	
30		Pin-Spring	
31		Plate-Support(Arm)	
32	40135301	Photo-Interrupter	
33		CONN Cord-JST3P-AMP3P	
34		TappingScrew-B2 L=8	
35		Frame-Feeder	
36	40135301	Photo-Interrupter	
37	42753101	Lever-PaperEnd(MPT)	
38		Spring-Earth(Feeder)	
39		Plate-Earth(Feeder)	
40		CONN Cord-AMP10P-AMP3PX2,JST3P	
41		Holder-Pickup	
42	42052001	Gear-Planet(Z20)-HP	
43	42954401	Roller Assy.-Pickup	
44	42753301	Spring-Pickup	
45		Stay-Hopper(Front)	
46		Stay-Hopper(Rear)	
47		Shaft-Feed	
48	42752601	Bearing-Feeder	
49	42832301	Bearing-Metal	
50	42752801	Gear-Oneway(Z38/Z53)	
51	42752901	Gear-Feed(Z25)	
52		Pin	
53	42701302	Roller-Feed(OW)	

www.drukparts.pl

54		Guide-Cable	
55	42753701	Hopper Assy.-MPT	Assy(Include:No.56-59,69-71)
56		Spring-FG	
57		Tray-SubHopper	
58		Supporter-Sheet	
59	42934701	Sheet-Recieve-Assy.	Assy(Include:No.60-68)
60		Frame-Hopper-MPT	
61		Plate-Beam-Hopper	
62		CS-2	
63		Guide-Paper(MPT)-R	
64		Guide-Paper(MPT)-F	
65		PINION GEAR B	
66		WAVE WASHER B	
67		Screw-T2D3-5	
68		Plate-Friction	
69	42925901	Lever-Lock(MPT)	
70	42929101	Spring-Lever(MPT)	
71		TappingScrew-B2 L=8	
72		Link-F(MPT)	
73		Plate-Hook-Front	
74		Link-R(MPT)	
75		Post-Stay_Front	
76		Post-Stay_Rear	
77		Plate-Cover(Feeder)	
78	42060701	Bush	
79	43042001	Lever-Paper(MPT)	
80		Spring-Paper(MPT)	
81		TappingScrew-B2 L=8	
82		Cup_Screw (S Tight M3)	
83	42939701	Roller-set-MPT-723	
84		Roller-set-MPT-723	
85		Roller-set-MPT-723	
86		Roller-set-MPT-723	

www.drukparts.pl

Ejest-Assy (42757101)

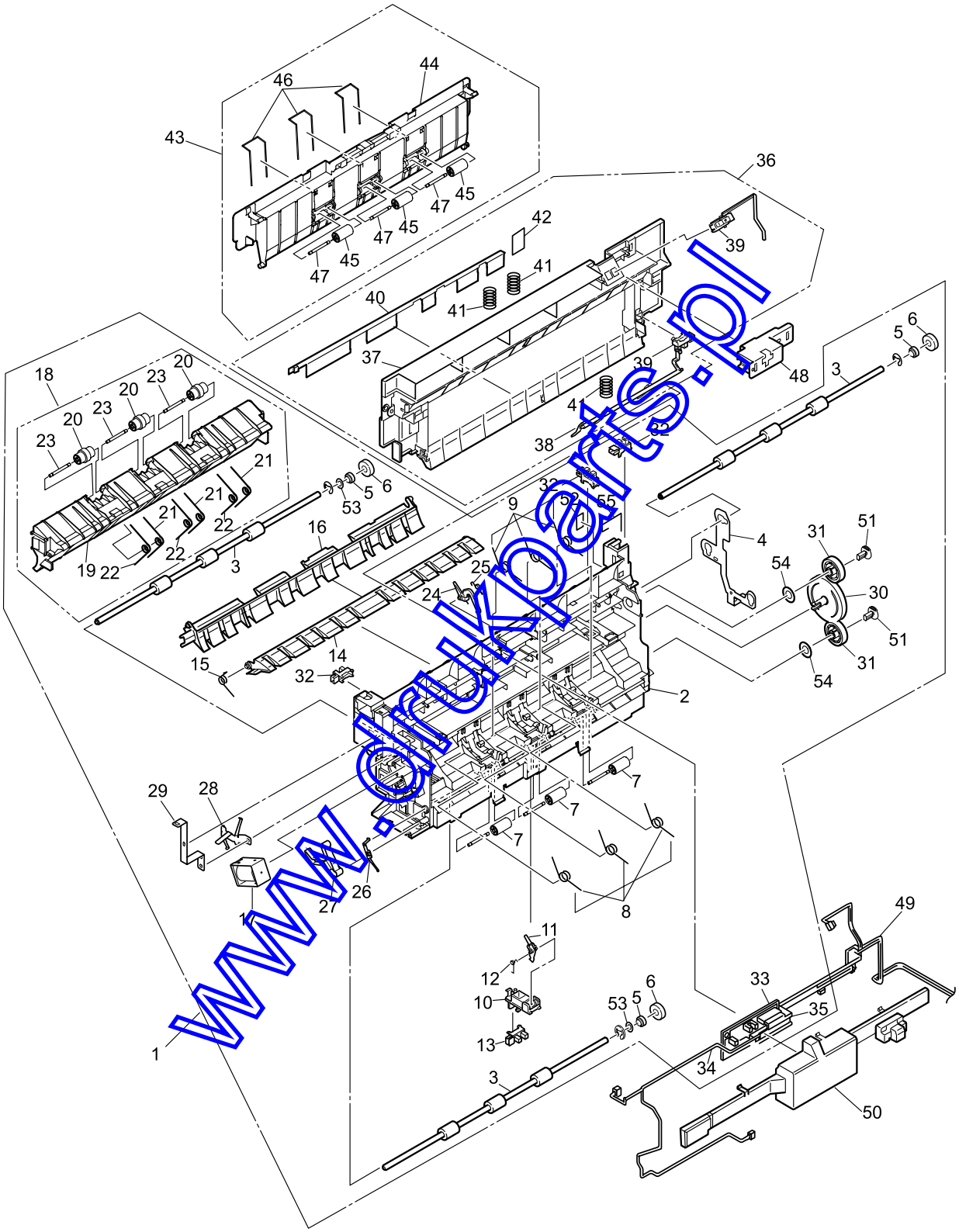

www.drukparts.pl

No.	Parts No.	Name	Remarks
1	42757501	Guide-Eject-Assy	Assy(Include:No.2-35)
2		Guide-Eject	
3	42757401	Roller-Eject	
4		Plate-FG_Eject-R	
5		Bush	
6	42757801	Gear-Eject_Z17	
7	42757901	Roller-Pinch-Eject	
8		Spring-Torsion-Eject	
9		Spring-Torsion-Eject	
10		Holder-Lever	
11	42759301	Lever-Exit_Sensor	
12		Spring-SNS(F/R)	
13	40135301	Photo-Interrupter	
14		Lever-Separator_DUP	
15		Spring-Separator_DUP	
16		Lever-Separator_Sheet	
17	42758801	DC-Solenoid-10SL-144	
18	42758901	Guide-Sheet-FU-Assy	Assy(Include:No.19-23)
19		Guide-Sheet-FU	
20	42759101	Roller Assy.-FU	
21		Spring-Torsion-FU	
22		Spring-Torsion-FU	
23		Shaft-Pinch	
24	42759601	Lever-Paper-END	
25	42765301	Spring-Paper-End(joboff)	
26		Plate-FG-Eject-L3	
27		Lever-Link-DUP	
28		Plate-FG-Eject-L1	
29		Plate-FG-Eject-L2	
30	42760201	Gear-Idle-Eject-Z54	
31		GEAR-IDLE-Eject_Z27	
32	40135301	Photo-Interrupter	
33	42868501	OR-S2R	
34		CONN Cord-AMP6P-AMP3PX2	
35		CONN Cord-AMP12P-AMP3PX4	
36	42760401	Guide-Eject-Outer- Assy	Assy(Include:No.37-42)
37		Guide-Eject-Outer	
38		Lever-Stacker-Full-RN	
39		Photo-Interrupter	
40		Sheet-Discharge(FU)	
41		Spring-LocK(Outer)	
42		Label-Cover-OPT	
43	42760801	Cover-Eject-Outer-Assy	Assy(Include:No.44-47)
44		Cover-Ejet-Outer	
45		Roller-Pinch-Eject	
46		Spring-Torsion-FD	
47		Shaft-Pinch	
48		Cover-SNS-FD	
49		CONN Cord-AMP13P-AMP13P	
50		Cover-Board	

www.drukparts.pl

Plate-Top-Assy (42761401)

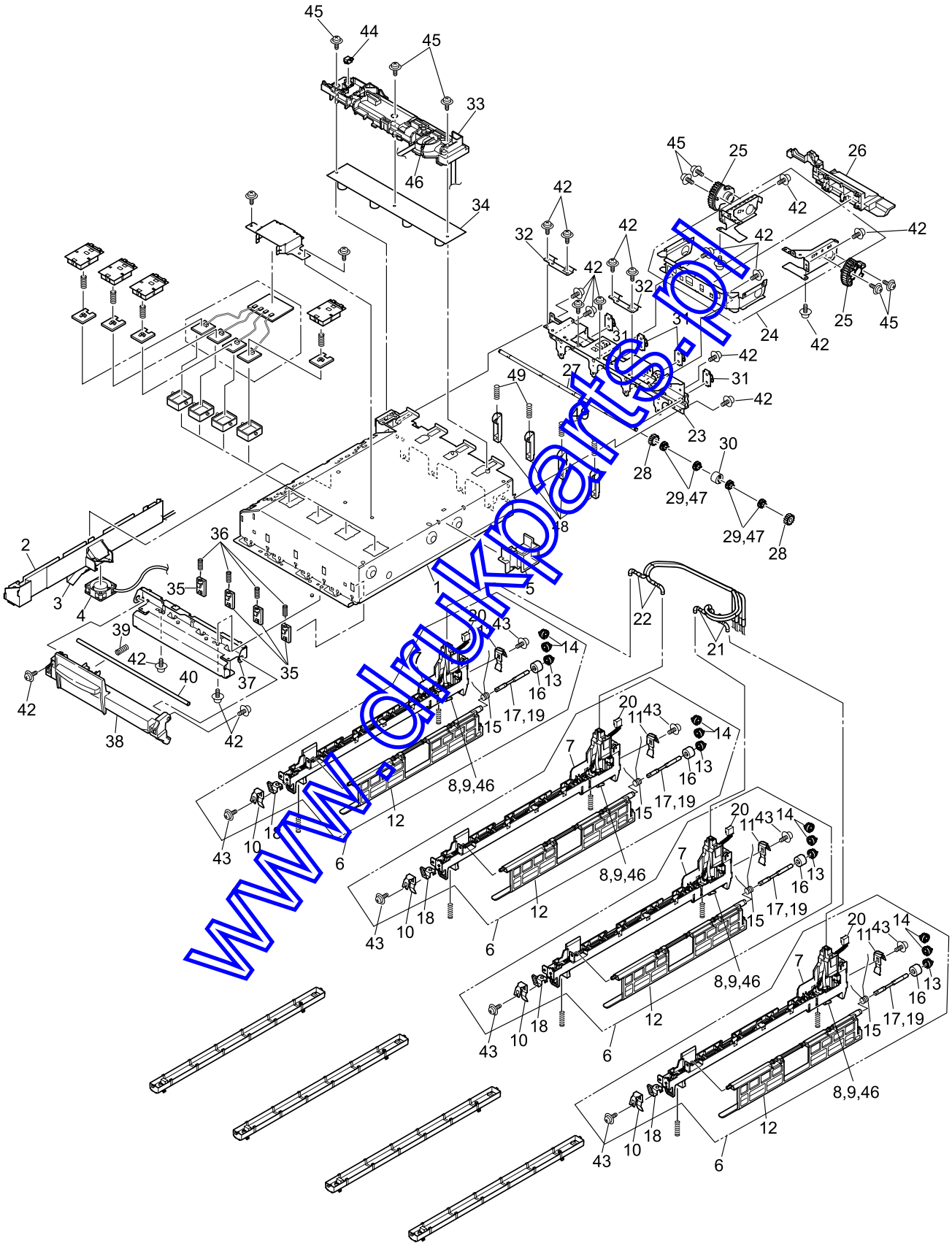

www.dukparts.pl

No.	Parts No.	Name	Remarks
1		Plate-Top-Welding	
2		Chamber-Duct-Top	
3	42872101	Spoiler-FAN	
4	42763301	Motor-Fan	
5		Holder-FAN-Intake	
6	42763801	Holder-Head- Assy.-	Assy(Include:No.7-19)
7		Holder-Head	
8		Clump-Cable-Head	
9		Spring-Torsion-100	
10		Plate-Contact-Head-F	
11		Plate-Contact-Head-R	
12		Plate-Shutter-LED1	
13		Gear-LED1	
14		Gear-LED4	
15		Spring-Torsion1	
16		Limiter-torque	
17		Post-shutter	
18		Plate-FG-Head-FS	
19		Pin	
20		CONN Cord-JST4P-JST4P	
21		CONN Cord-JST10P-JST10P	
22		CONN Cord-JST10P-JST10P	
23		Plate-Top-Support	
24		Plate-Pivot-Welding	
25	42762201	Gear-Damper-TOP	
26	42763101	Code-Cover-Top	
27	42857701	Shaft-LED-Shutter	
28	42857301	Gear-LED2	
29	42857401	Gear-LED3	
30		Limiter-torque	
31		Plate-FG-Top-R	
32		Plate-Clump-HCT	
33		Code-Guide-Top	
34	42868601	OR-S2H	
35		Holder-Spring-ID	
36		Spring-Tension	
37		Plate-Lock-Caulking	
38		Lever-Top	
39		Spring-Lock	
40		Shaft-Support-Lock	
41		Cup_Screw A	
42		Cup_Screw (S Tight M 3)	
43		TappingScrew-B2 L=8	
44		BU03P-TR-PC-H(LF)Connector-Plug-	
45		Cup_Screw A	
46		TYING CORD	
47		Pin	
48		Cap-Press-ID	
49	42983701	Spring-Press-ID	

www.drukparts.pl

Job-Offset-Assy (42765101)

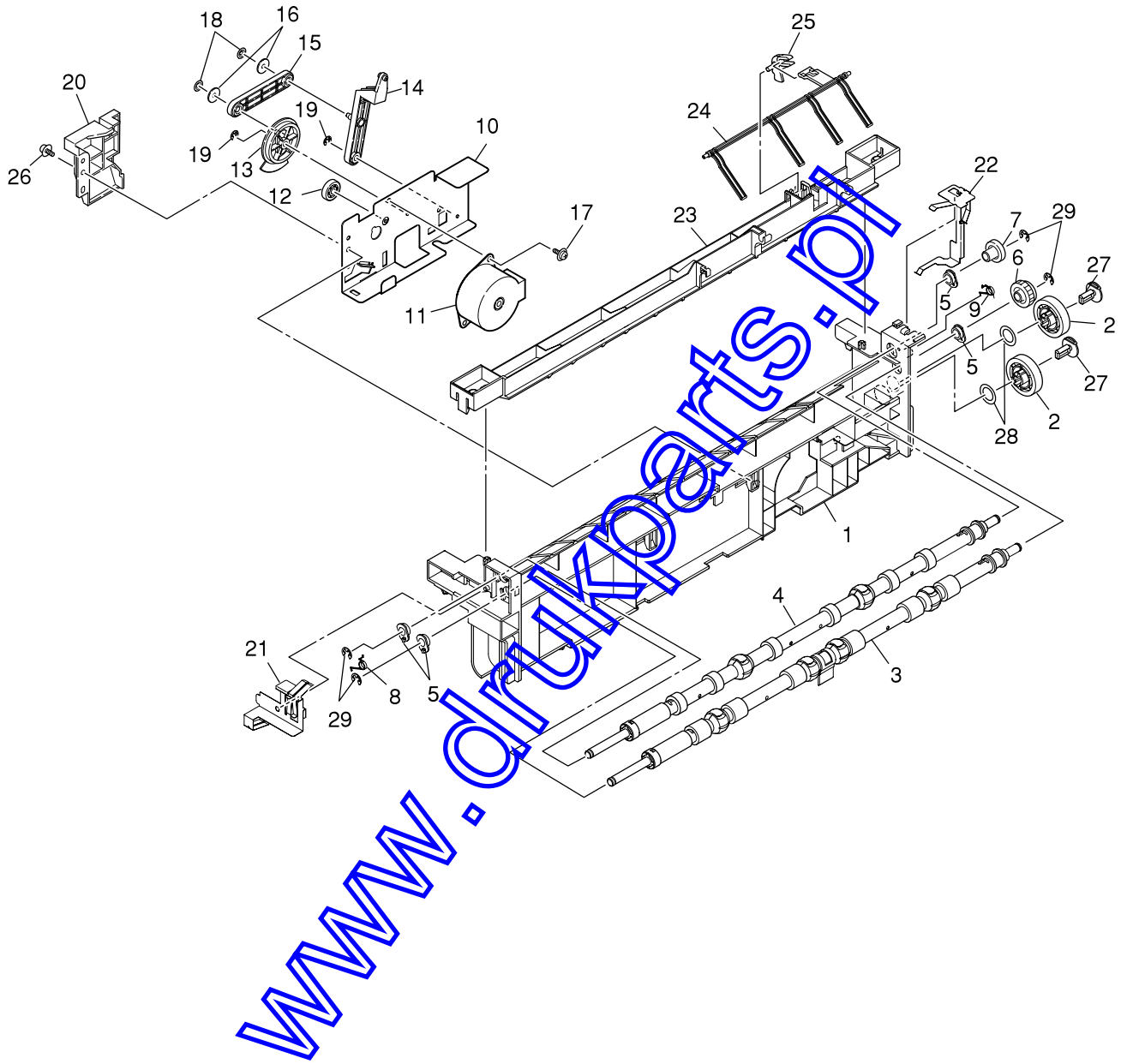

www.drukparts.pl

No.	Parts No.	Name	Remarks
1		Holder-Joboff-Lower	
2	42760301	GEAR-IDLE-Eject_Z27	
3	42809001	Pipe-Assy-Drive	
4	42765801	Pipe-Assy-Driven	
5		Bush-Shaft	
6	43034301	Gear-Drive	
7	41351101	Gear-Driven	
8		Spring-Bush-L	
9		Spring-Bush-R	
10		Bracket-Motor(Caulking)	
11	42058201	Motor-Resist	
12	42766801	Gear-Idle-Z28	
13	42766901	Gear-Link-Z60	
14		Lever-Link-B	
15		Lever-Link-A	
16		Washer - 2W3	
17		Cup_Screw (S Tight M 3)	
18		CS-RING (CS3-SUS)	
19		Ring	
20		Cover-Motor_Joboff	
21		Contact-Joboff-L	
22	42767201	Contact-Joboff-R	
23	42767401	Holder-Joboff-Upper	
24	42767501	Lever-Stacker-Full-F	
25	42767601	Lever-Stacker-Full-Sub	
26		TappingScrew-B2 L=8	
27		Limiter-Pin	
28		Spacer-Coupling	
29		Ring	

www.drukparts.pl

Basket-Assy (42768901)

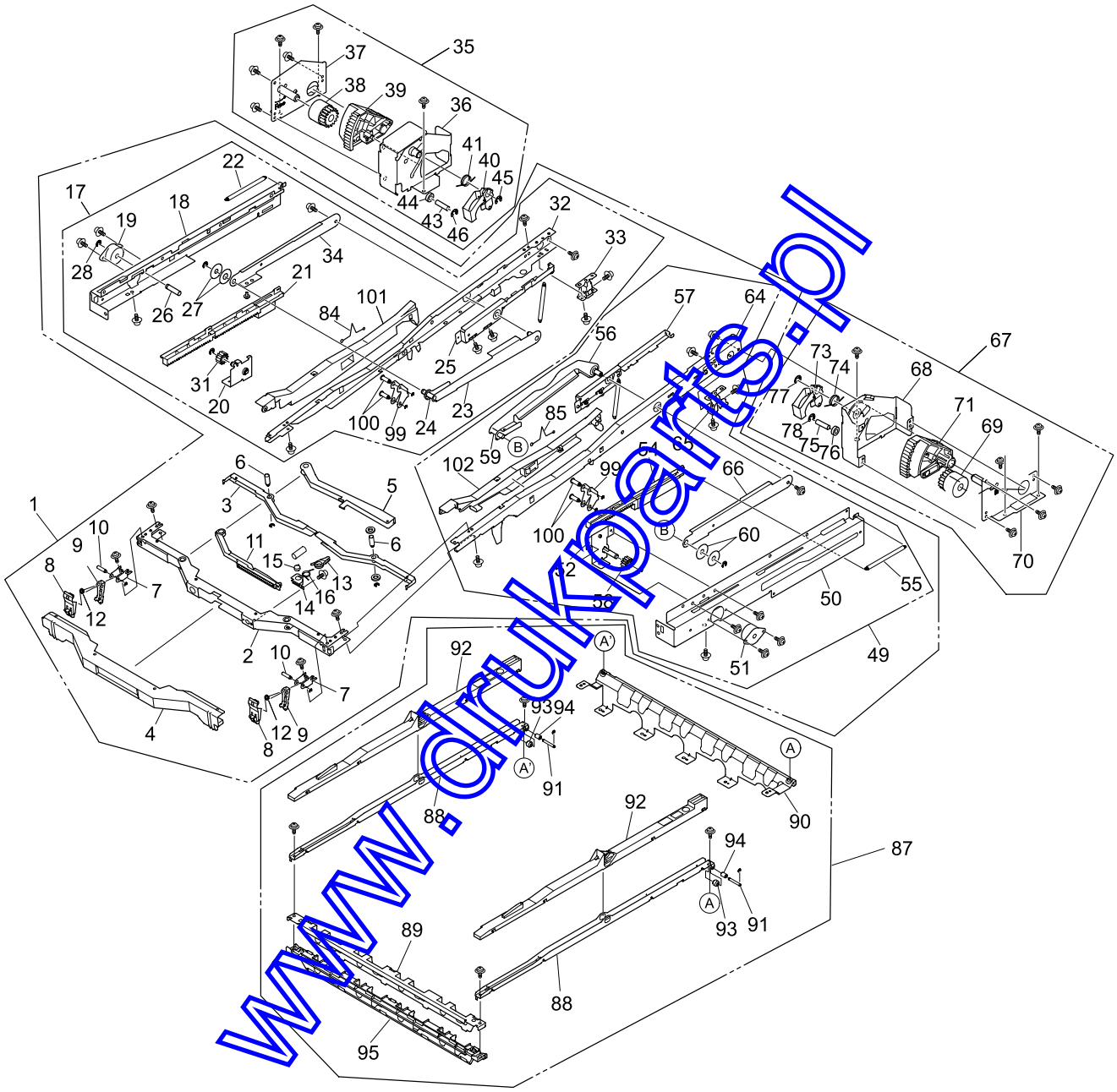

www.drukparts.pl

No.	Parts No.	Name	Remarks
1	42769001	Basket-Main-Assy	Assy(Include:No.2-17,49,81-86)
2		Plate-Bar	
3		Plate-Lever-01	
4		Lever-Basket-01	
5		Lever-Basket-02	
6		Post-Lever-01	
7		Plate-Lock-01	
8		Cover-Lock-Lever	
9		Plate-Lock-02	
10		Post-Lock-Lever	
11		Lever-Basket-03	
12		Spring-Lock-L	
13		Lever-Stopper	
14		Plate-Stopper	
15		Post-Stopper	
16		Spring-Stopper	
17	42879001	Link-Unit-L	Assy(Include:No.18-35,47-48)
18		Guide-Link-L	
19	42919302	One-Way-Hinge-L	
20		Plate-Damper-L	
21		Rack-Damper-L	
22		Spring-Lack-Damper-0.4	
23		Link-Caulking-L	
24		Post-Link-6	
25		Bracket-Link-L	
26		Post-One-Way	
27		Washer-6-22	
28		Ring	
29		Cup_Screw (S Tight M 3)	
30		Cup_Screw A	
31		Gear-Damper	
32		Plate-BKL	
33		Plate-Support-BK	
34		Plate-Link-L	
35	42774401	Gear Assy.-L	Assy(Include:No.36-46)
36		Plate-damper-L-Caulking	
37		Plate-Dumper-L2-Caulking	
38		Damper-R	
39		Gear-BKL	
40		Plate-Limiter	
41		Spring-Limiter L	
42		Cup_Screw (S Tight M 3)	
43		Post-Limiter-Roller	
44		Roller-Limiter	
45		Ring	
46		Ring	
47		Tap_Thigt_Screw	
48		Bearing-6-10-2.7T	
49		Link-Unit-R	Assy(Include:No.50-67,79-80)
50		Guide-Link-R	
51	42919402	One-Way-Hinge-R	
52		Plate-Damper-R	
53		Post-One-Way	

www.drukparts.pl

54		Rack-Damper-R	
55		Spring-Lack-Damper-0.4	
56		Link-Caulking-R	
57		Bracket-Link-R	
58		Gear-Damper	
59		Post-Link-6	
60		Washer-6-22	
61		Ring	
62		Cup_Screw (S Tight M 3)	
63		Cup_Screw A	
64		Plate-BKR	
65		Plate-Support-BK	
66		Plate-Link-R	
67	42777401	Gear Assy.-R	Assy(Include:No.68-78)
68		Plate-Damper-R-Caulking	
69		Damper-L	
70		Plate-Dumper-R2-Caulking	
71		Gear-BKR	
72		Cup_Screw (S Tight M 3)	
73		Plate-Limiter	
74		Spring-Limiter R	
75		Post-Limiter-Roller	
76		Roller-Limiter	
77		Ring	
78		Ring	
79		Tap_Thigt_Screw	
80	43024901	Bearing-6-10-2.7T	
81		Cup_Screw (S Tight M 3)	
82		Ring	
83		Screw-PSW3	
84		Spring-FG-L	
85		Spring-FG-R	
86		Gasket	
87	42771801	Basket-Inner- Assy.-	Assy(Include:No.88-97)
88		Plate-Beam	
89		Plate-BKF	
90		Plate-BK-Rear	
91		Post-Guide-Roller	
92		Cover-Beam	
93		Roller-Guide-BK	
94		Roller-Guide BK2	
95		Frame-BKF	
96		Ring	
97		Cup_Screw (S Tight M 3)	
98		Spring-BK	
99		Plate-Link	
100		Post-Basket-01	
101		Cover-BKL	
102		Cover-BKR	
103		Label-ID-Position-Bas	
104		Ring	

www.drukparts.pl