KYOCERA

www.drukparts.pl

FS-C5015N
FS-C5025N

PARTS LIST

Published in June 2007
2HKPL072
842HK122
Rev.2

NOTES

1. Indicate parts number and machine model when placing an order.

e.g. Parts Number	Parts Name	Machine Model	Frequency	Quantity
302HJ00010	KEY BOARD ASSY (16/17ppm EUR/USA)	FS-C5015N	50Hz / 60Hz	1
302HK00010	KEY BOARD ASSY (20/22ppm EUR/USA)	FS-C5025N	50Hz / 60Hz	1

2. Service calls and freight will be charged separately.

3. Symbols in the "Parts Number" column.

- Parts with "•" are component parts or sub-assemblies of the assembly appearing immediately above them.

e.g. Parts Number	Parts Name	Parts Number	Parts Name
302F300830	COVER TOP ASSY	•302F304020	ROLLER FD
		•302F304030	DISCHARGER FD

- Parts with "••" are component parts or sub-assembly with "•" appearing immediately above them.

e.g. Parts Number	Parts Name	Parts Number	Parts Name
•302F300660	BRACKET HV MAIN ASSY	••302F331150	BRACKET HV MAIN
		••302F331160	PIN HV CONTACT

- Parts with "⊙" indicate the spare parts and the parts without "⊙" can not be supplied.

www.drukparts.pl

CONTENTS

FIG. 1 Exterior Covers 2
FIG. 2 Upper Frame Unit 4
FIG. 3 Drive Units 6
FIG. 4 Controller Box 8
FIG. 5 Paper Feed Unit 10
FIG. 6 Fuser Unit (16/17ppm EUR/USA) 12
FIG. 6 Fuser Unit (20/22ppm EUR/USA) 14
FIG. 7 Drum Unit / LED Unit 16
FIG. 8 Developer Unit 18
FIG. 9 Frame MP Assembly 20
FIG. 10 MP Tray 22
FIG. 11 Primary Transfer Unit 24
FIG. 12 Paper Cassette 26
FIG. 13 Accessories 28
FIG. 14 Packing Assemblies 30

• INDEX 31

www.oruk parts.pl

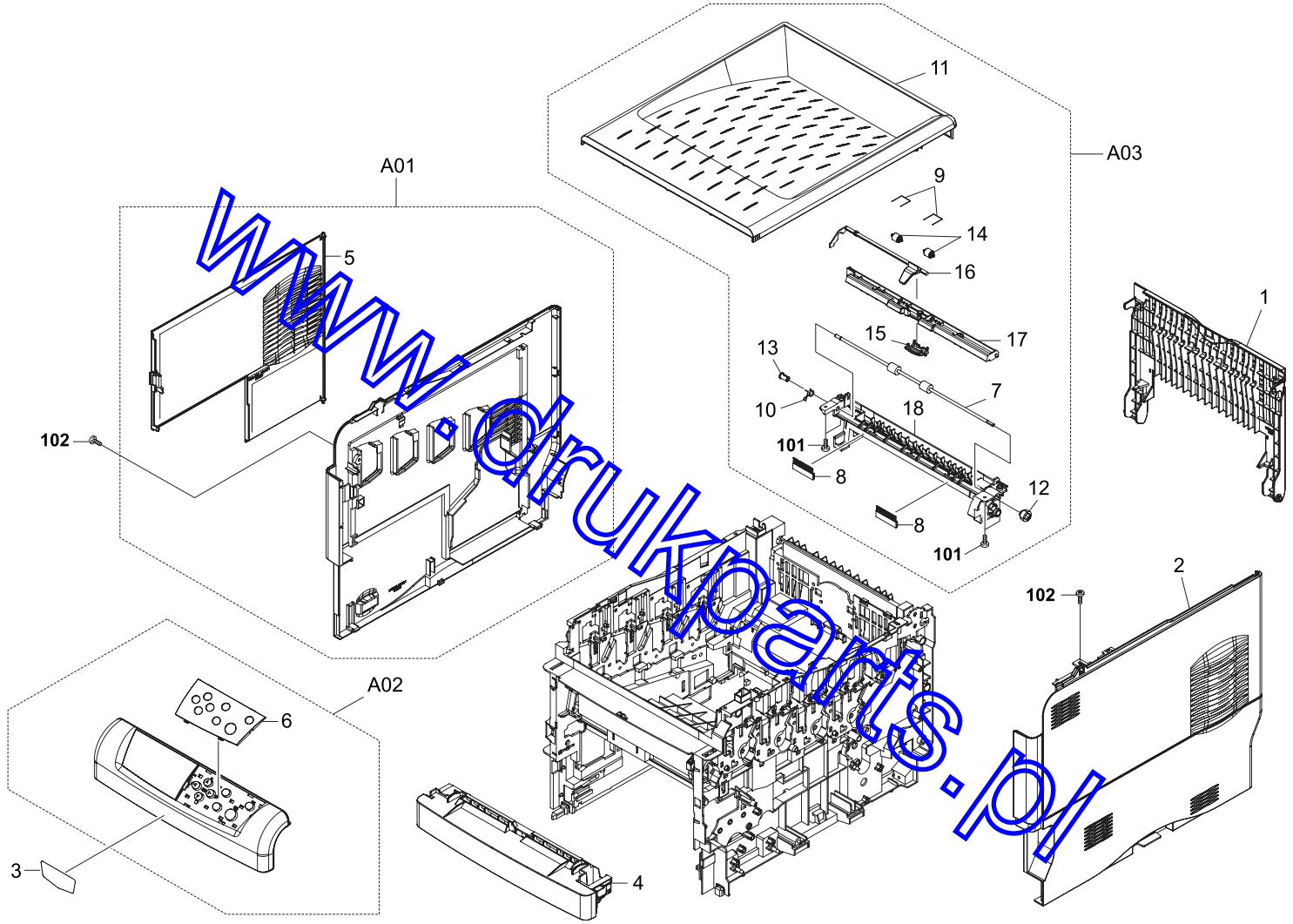

www.orukoans.ol

FIG. 1 Exterior Covers

SP	Ref. No.	Part.No.	Alternative.	Description	Quantity 110	120	230	240
⊙	1	302D904053	2D904053	COVER REAR	1	1	1	1
⊙	2	302F300390	2F300390	COVER RIGHT ASSY	1	1	1	1
	3	302HJ04040	2HJ04040	PLATE EMBLEM	1	1	1	1
⊙	4	5MVB855SH001	2FP04150	COVER FRONT	1	1	1	1
⊙	A01	302F300371	2F300371	COVER LEFT ASSY	1	1	1	1
⊙	5	•302D904042	2D904042	COVER SIDE	1	1	1	1
⊙	A02	302HJ00010	2HJ00010	KEY BOARD ASSY (16/17ppm EUR/USA)	1	1	1	1
⊙	A02	302HK00010	2HK00010	KEY BOARD ASSY (20/22ppm EUR/USA)	1	1	1	1
⊙	6	•302HJ05020	2HJ05020	COVER PANEL (16/17ppm EUR/USA)	1	1	1	1
⊙	6	•302HK05010	2HK05010	COVER PANEL (20/22ppm EUR/USA)	1	1	1	1
⊙	A03	302F300830	2F300830	COVER TOP ASSY	1	1	1	1
⊙	7	•302F304020	2F304020	ROLLER FD	1	1	1	1
⊙	8	•302F304030	2F304030	DISCHARGER FD	2	2	2	2
⊙	9	•5MMW251LD046	2BS04050	SPRING PULLEY	2	2	2	2
	10	•5MMW463LD001	2D902570	SPRING FD LOW	1	1	1	1
⊙	11	•5MVB986SH026	2D904010	COVER TOP	1	1	1	1
⊙	12	•5MVG127DN076	2BS02220	GEAR ROLL FD Z18	1	1	1	1
⊙	13	•5MVM266DN006	2BS02290	BUSH FD	1	1	1	1
⊙	14	•5MVM273DB006	2BS04170	ROLLER PINCH	2	2	2	2
⊙	15	•5MVX332DB015	2D904170	GUIDE STOCK		1	1	1
⊙	16	•5MVX732CB003	2BS04310	ACTUATOR FD		1	1	1
	17	•5MVX852CH002	2BS04340	FRAME FD		1	1	1
	18	•5MVX866XB003	2D904060	FRAME FD LOW		1	1	1

SP	Ref. No.	Part.No.	Alternative.	Description	Quantity 110	120	230	240
	101	5MBTPB3010PW++R	B1B63100	BIND T.T SCREW(+) / M3 X 10 CRFREE P-T				
	102	5MBTPB4010PW++R	B1A64100	BIND T.T SCREW(+) / M4 X 10 CRFREE P-T				

• Parts with "•" are component parts or sub-assemblies of the assembly appearing immediately above them.

• Parts with "⊙" indicate the spare parts.

• Parts with "• •" are component parts or sub-assembly with "•" appearing immediately above them.

www.drukparts.pl

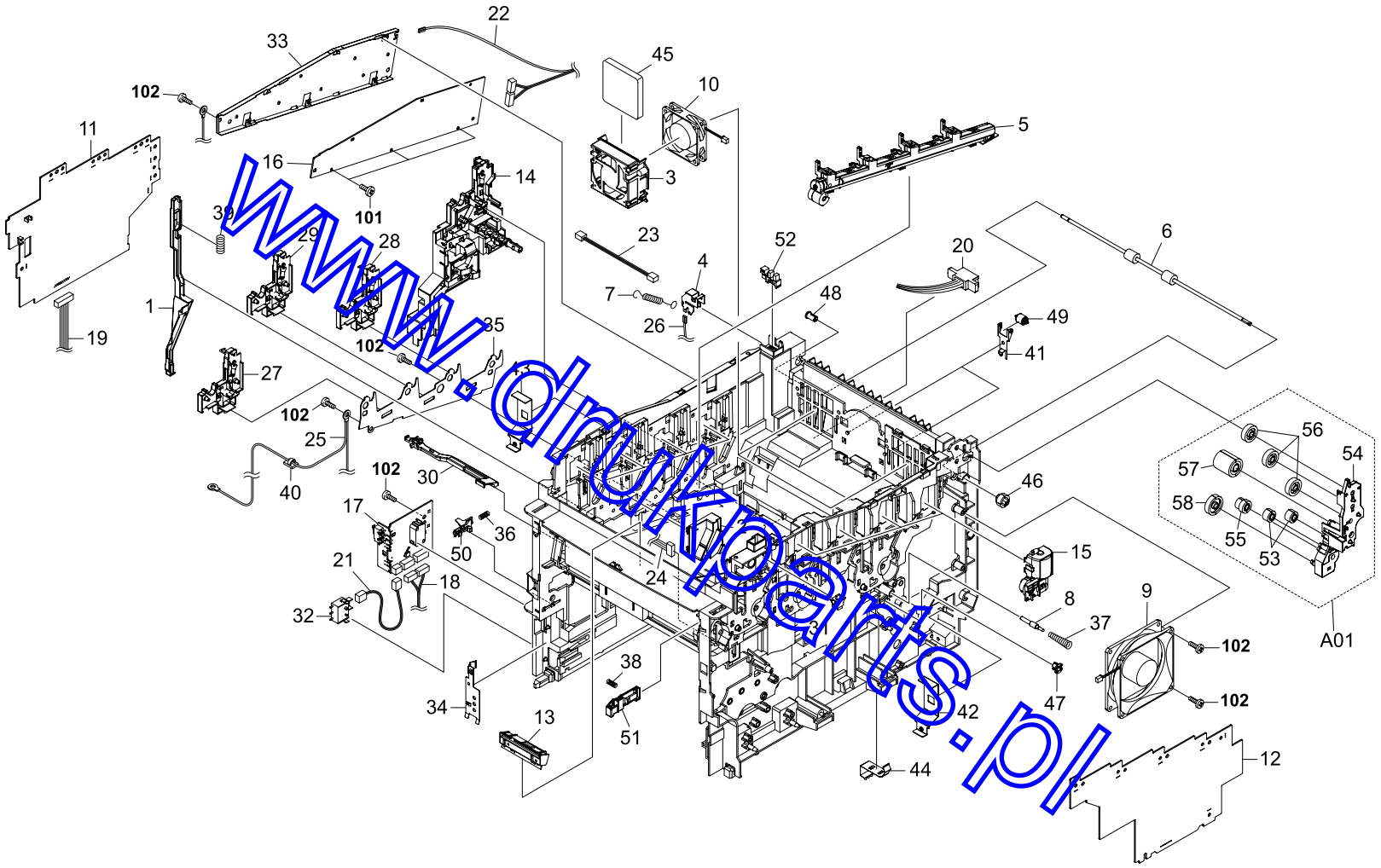

www.drukogniwa.pl

FIG. 2 Upper Frame Unit

SP	Ref. No.	Part.No.	Alternative.	Description	Quantity 110	120	230	240
	1	302D902311	2D902311	ROD INTERLOCK	1	1	1	1
	2	302D902372	2D902372	COVER HARNESS	4	4	4	4
	3	302D902542	2D902542	BRACKET FAN	2	2	2	2
	4	302D902551	2D902551	PLATE EARTH FD	1	1	1	1
⊙	5	302F300430	2F300430	WASTE TONER ASSY	1	1	1	1
⊙	6	302F302010	2F302010	ROLLER FD LOW	1	1	1	1
	7	302F302020	2F302020	SPRING EARTH FD	1	1	1	1
	8	302F302030	2F302030	PIN CONTACT BIAS	1	1	1	1
⊙	9	302F344011	2F344011	FAN MOTOR	1	1	1	1
⊙	10	302F344031	2F344031	FAN MOTOR	2	2	2	2
⊙	11	302F345011	2F345011	TRANS ASSY HI VOLTAGE MAIN	1	1	1	1
⊙	12	302F345021	2F345021	TRANS ASSY HI VOLTAGE DLP	1	1	1	1
⊙	13	302HJ00020	2HJ00020	SENSOR ID ASSY	1	1	1	1
⊙	14	302HJ00040	2HJ00040	BRACKET FD ASSY /C5015 (16/17ppm EUR/USA)	1	1	1	1
⊙	14	302HK00100	2HK00100	BRACKET FD ASSY /C5025(E) (20/22ppm EUR/USA)	1	1	1	1
⊙	15	302HJ00050	2HJ00050	TONER MOTOR ASSY	4	4	4	4
⊙	16	302HJ01020	2HJ01010	P.W.BOARD ASSY LEDRLY (16/17ppm EUR/USA)	1	1	1	1
⊙	16	302HK01020	2HK01020	P.W.BOARD ASSY LEDRLY (20/22ppm EUR/USA)	1	1	1	1
⊙	17	302HJ01140	2HJ01140	P.W.BOARD ASSY SENSOR	1	1	1	1
	18	302HJ46040	2HJ46040	CONN. CORD ASSY S03197	1	1	1	1
	19	302HJ46060	2HJ46060	CONN. CORD ASSY S03199	1	1	1	1
	20	302HJ46080	2HJ46080	CONN. CORD ASSY S03203	1	1	1	1
	21	302HJ46110	2HJ46110	CONN. CORD ASSY S03207	1	1	1	1
	22	302HJ46170	2HJ46170	CONN. CORD ASSY S03213	1	1	1	1
	23	302HJ46180	2HJ46180	CONN. CORD ASSY S03215	1	1	1	1
	24	302HJ46210	2HJ46210	CONN. CORD ASSY S03219	1	1	1	1
	25	302HJ46230	2HJ46230	CONN. CORD ASSY S03221	1	1	1	1
	26	302HK46040	2HK46040	CONN. CORD ASSY S03232	1	1	1	1
⊙	27	5AAYA80E++71	2D969810	BRACKET HV DLP K ASSY	1	1	1	1
⊙	28	5AAYA80E++72	2D969820	BRACKET HV DLP C ASSY	1	1	1	1
⊙	29	5AAYA80E++73	2D969830	BRACKET HV DLP Y ASSY	1	1	1	1
⊙	30	5AAYA80E++75	2D969860	CLEANER ID ASSY	1	1	1	1
⊙	31	5ESP01000101+01	SP000310	PUSH SWITCH 01 SN	1	1	1	1
⊙	32	5FSP03090001+01	SP0A0360	PUSH SWITCH 03 SN	1	1	1	1
	33	5MMB861SD004	2D902200	PLATE SHIELD PWB	1	1	1	1
	34	5MMS632LD001	2D902320	PLATE EARTH HV A	1	1	1	1
	35	5MMS866SD001	2D908510	PLATE FRAME DRUM	1	1	1	1
	36	5MMW222LD002	2BR02280	SPRING LEVER EF	1	1	1	1
	37	5MMW222LD003	2D902580	SPRING CONTACT CLN	1	1	1	1
	38	5MMW261LD051	2BR02340	SP LOCK COVER M/P	1	1	1	1
	39	5MMW451LD001	2B700570	SPRING INTER LOCK	1	1	1	1
	40	5MMX221SW002	3FW02530	CORD KEEP	1	1	1	1
	41	5MMX431LD017	2D902410	BRACKET ROLLER PINCH	2	2	2	2
	42	5MMX632SD006	2D902380	PLATE EARTH FUSER	1	1	1	1
	43	5MMX632SD006	2D902380	PLATE EARTH FUSER	1	1	1	1
	44	5MMZ242LD002	2D902330	PLATE EARTH HV B	1	1	1	1

SP	Ref. No.	Part.No.	Alternative.	Description	Quantity 110	120	230	240
⊙	45	5MVB661XF001	2D902530	OZONE FILTER	2	2	2	2
⊙	46	5MVG127DN076	2BS02220	GEAR ROLL FD Z18	1	1	1	1
⊙	47	5MVM176DN035	2D922250	BUSH FRAME	1	1	1	1
⊙	48	5MVM266DN006	2BS02290	BUSH FD	1	1	1	1
⊙	49	5MVM273DB006	2BS04170	ROLLER PINCH	2	2	2	2
	50	5MVX322DB023	2BS02350	LEVER EF	1	1	1	1
	51	5MVX522DB006	2BS02390	LOCK COVER M/P	1	1	1	1
⊙	52	7NXEESX1235AH01	2D902860	PT.SENSOR EE-SX1235A	1	1	1	1
⊙	A01	302F300890	2F300890	BRACKET FD GEAR ASSY	1	1	1	1
⊙	53	•2B720380	5MVG127DW004	GEAR IDLE Z16	2	2	2	2
⊙	54	•302D902391	2D902391	BRACKET FD GEAR	1	1	1	1
⊙	55	•5MVG127DN122	2D902400	GEAR FD Z15-Z18	1	1	1	1
⊙	56	•5MVG137DN014	2BS02240	GEAR IDLE Z25	3	3	3	3
⊙	57	•5MVG138DN047	2BS02260	GEAR FD Z28	1	1	1	1
⊙	58	•5MVG138DN048	2BD02270	GEAR FD Z29	1	1	1	1
	101	5MBTPB3006TW++R	B1A53060	BIND T.T SCREW(+) / M3 X 6 CRFREE S-T				
	102	5MBTPB4010PW++R	B1A64100	BIND T.T SCREW(+) / M4 X 10 CRFREE P-T				

• Parts with "•" are component parts or sub-assemblies of the assembly appearing immediately above them.

• Parts with "⊙" indicate the spare parts.

• Parts with "• •" are component parts or sub-assembly with "•" appearing immediately above them.

www.drukparts.pl

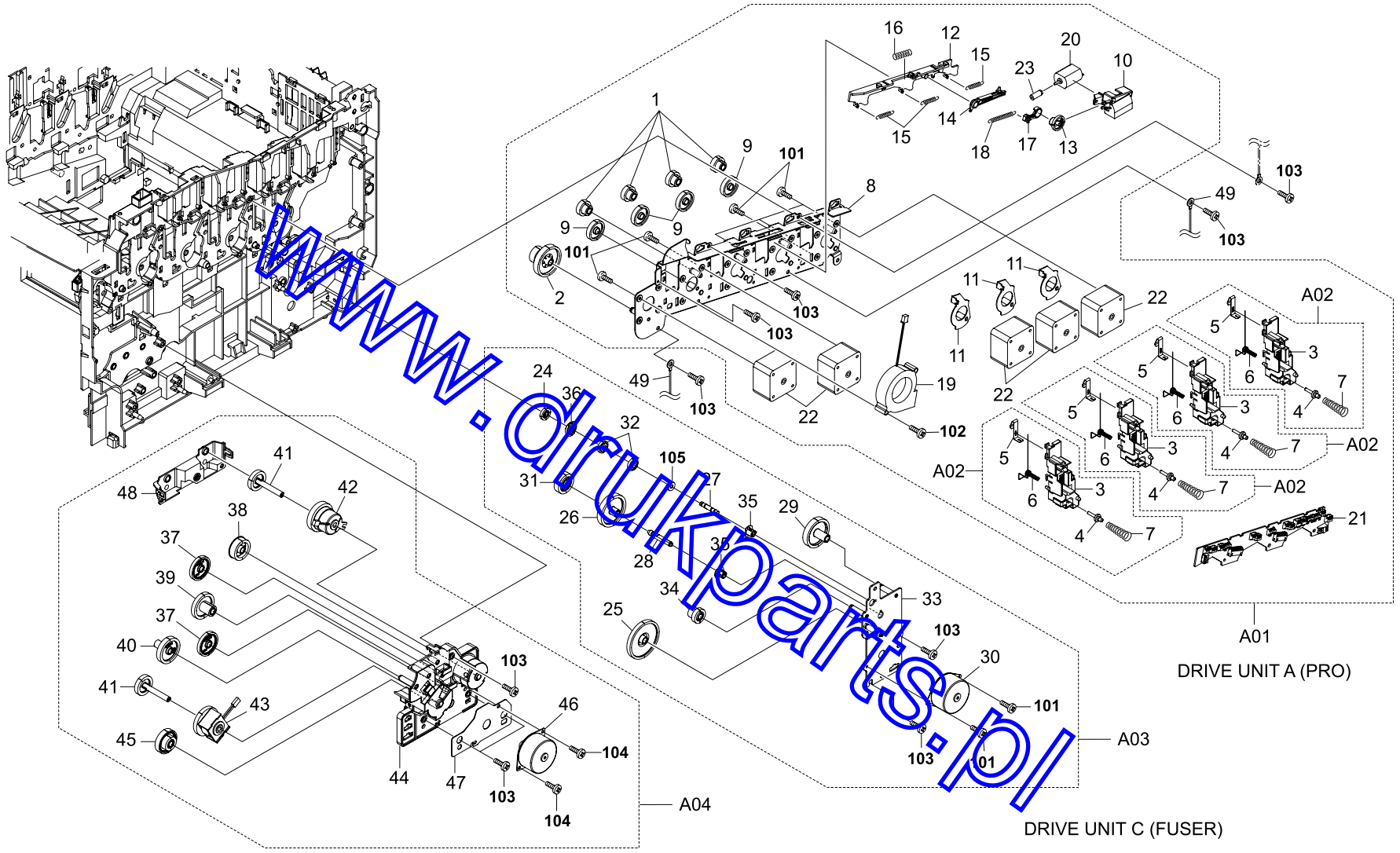

www.drukparts.pl

FIG. 3 Drive Units

SP	Ref. No.	Part.No.	Alternative.	Description	Quantity 110	120	230	240
⊙	A01	302HJ93070	2HJ93070	DR-511A DRIVE PRO UNIT (16/17ppm EUR/USA)	1	1	1	1
⊙	A01	302HK93020	2HK93020	DR-521A DRIVE PRO UNIT (20/22ppm EUR/USA)	1	1	1	1
⊙	1	•302D922161	2D922161	GEAR Z21H-Z20H	4	4	4	4
⊙	2	•302D922181	2D922181	GEAR Z72H-Z22H	1	1	1	1
	A02	•302F300660	2F300660	BRACKET HV MAIN ASSY	4	4	4	4
	3	••302F331150	2F331150	BRACKET HV MAIN	4	4	4	4
	4	••302F331180	2F331180	PIN HV CONTACT	4	4	4	4
	5	••302F331190	2F331190	CONTACT MAIN B	4	4	4	4
	6	••302F331200	2F331200	SPRING HV MAIN	4	4	4	4
	7	••5MMW311LD003	2B702130	SPRING HV CONTACT	4	4	4	4
	8	•302F331010	2F331010	PLATE DRIVE MAIN	1	1	1	1
⊙	9	•302F331022	2F331022	GEAR Z40H	4	4	4	4
	10	•302F331030	2F331030	BRACKET MOTOR	1	1	1	1
	11	•302F331041	2F331041	PLATE IDLE ARM	3	3	3	3
	12	•302F331050	2F331050	LEVER PLATE IDLE	1	1	1	1
⊙	13	•302F331060	2F331060	CAM GEAR Z34H	1	1	1	1
⊙	14	•302F331081	2F331081	LEVER CAM	1	1	1	1
	15	•302F331090	2F331090	SPRING IDLE ARM	3	3	3	3
	16	•302F331100	2F331100	SPRING LEVER	1	1	1	1
⊙	17	•302F331160	2F331160	HOOK CRANK	1	1	1	1
	18	•302F331170	2F331170	SPRING HOOK CRANK	1	1	1	1
⊙	19	•302F344021	2F344021	FAN MOTOR	1	1	1	1
⊙	20	•302F344040	2F344040	DC MOTOR	1	1	1	1
⊙	21	•302HJ01100	2HJ01100	P.W.BOARD ASSY ENGRLY	1	1	1	1
⊙	22	•302HJ31010	2HJ31010	STEPPING MOTOR PRO (16/17ppm EUR/USA)	5	5	5	5
⊙	22	•302HK31010	2HK31010	STEPPING MOTOR PRO (20/22ppm EUR/USA)	5	5	5	5
⊙	23	•5MVG115DB002	2BM14540	GEAR WORM	1	1	1	1
⊙	A03	302F393121	2F393121	DR-510C DRIVE FUSER UNIT (16/17ppm EUR/USA)	1	1	1	1
⊙	A03	302F493051	2F493051	DR-520C DRIVE FUSER UNIT (20/22ppm EUR/USA)	1	1	1	1
⊙	24	•302D915211	2D915211	GEAR DRIVE FUSER Z22	1	1	1	1
⊙	25	•302D922101	2D922101	GEAR Z93S-Z24S	1	1	1	1
⊙	26	•302D922112	2D922112	GEAR Z48S	1	1	1	1
⊙	27	•302F331210	2F331210	SHAFT CLUTCH B	1	1	1	1
⊙	28	•302F331220	2F331220	SHAFT CLUTCH	1	1	1	1
⊙	29	•302F331250	2F331250	GEAR Z43S (16/17ppm EUR/USA)	1	1	1	1
⊙	29	•5MVG154BN001	2D922130	GEAR Z43S (20/22ppm EUR/USA)	1	1	1	1
⊙	30	•302HJ31020	2HJ31020	STEPPING MOTOR FUSER (16/17ppm EUR/USA)	1	1	1	1
⊙	30	•302F431011	2F431011	STEPPING MOTOR FUSER (20/22ppm EUR/USA)	1	1	1	1
⊙	31	•5AAVGEAR+044	2D969180	GEAR Z29S ASSY	1	1	1	1
⊙	32	•5AAVGEAR+045	2D969870	GEAR Z22S ASSY	2	2	2	2
	33	•5MMX763SD003	2D922090	PLATE DRIVE FUSER	1	1	1	1
⊙	34	•5MVG122DN009	2D922140	GEAR Z14-Z20	1	1	1	1

SP	Ref. No.	Part.No.	Alternative.	Description	Quantity 110	120	230	240
⊙	35	•5MVM176DN034	2D922240	BUSH SHAFT CLUTCH	2	2	2	2
⊙	36	•5MVM331DN002	2D915200	BUSH DRIVE FUSER	1	1	1	1
⊙	A04	302F393111	2F393111	DR-510B DRIVE FEED UNIT (16/17ppm EUR/USA)	1	1	1	1
⊙	A04	302F493041	2F493041	DR-520B DRIVE FEED UNIT (20/22ppm EUR/USA)	1	1	1	1
⊙	37	•302D922041	2D922041	GEAR Z35S	2	2	2	2
⊙	38	•302D922051	2D922051	GEAR Z30S	1	1	1	1
⊙	39	•302D922061	2D922061	GEAR Z38S-Z14S	1	1	1	1
⊙	40	•302D922071	2D922071	GEAR Z38S	1	1	1	1
⊙	41	•302D922081	2D922081	GEAR CL Z21S	2	2	2	2
⊙	42	•302F331120	2F331120	CLUTCH REGIST	1	1	1	1
⊙	43	•302F331130	2F331130	CLUTCH FEED	1	1	1	1
	44	•302F331140	2F331140	BRACKET DRIVE FEED	1	1	1	1
⊙	45	•302F331260	2F331260	GEAR Z56H-Z20S	1	1	1	1
⊙	46	•302F344051	2F344051	STEPPING MOTOR FEED (16/17ppm EUR/USA)	1	1	1	1
⊙	46	•302F431021	2F431021	STEPPING MOTOR FEED (20/22ppm EUR/USA)	1	1	1	1
⊙	47	•5MMS656AX001	2D922260	SHEET MOTOR FEED (20/22ppm EUR/USA)	1	1	1	1
	48	•5MVB732XB002	2D922020	COVER DRIVE FEED	1	1	1	1
	49	302HK46050	2HK46050	CONN. CORD ASSY S03233	2	2	2	2
	101	B1A53050	B1A53050	BIND T.T SCREW(+) / M3 X 5 CRFREE S-T				
	102	5MBTPB3020TW++R	B1A53200	BIND T.T SCREW(+) / M3 X 20 CRFREE S-T				
	103	5MBTPB4010PW++R	B1A64100	BIND T.T SCREW(+) / M4 X 10 CRFREE P-T				
	104	5MBTPB3008PW++R	B1A63080	BIND T.T SCREW(+) / M3 X 8 CRFREE P-T				
	105	5MBWN02F02NN	C2890150	POLY WASHER / M9.2X 15X0.2T				

• Parts with "•" are component parts or sub-assemblies of the assembly appearing immediately above them.

• Parts with "⊙" indicate the spare parts.

• Parts with "• •" are component parts or sub-assembly with "•" appearing immediately above them.

www.drukparts.pl

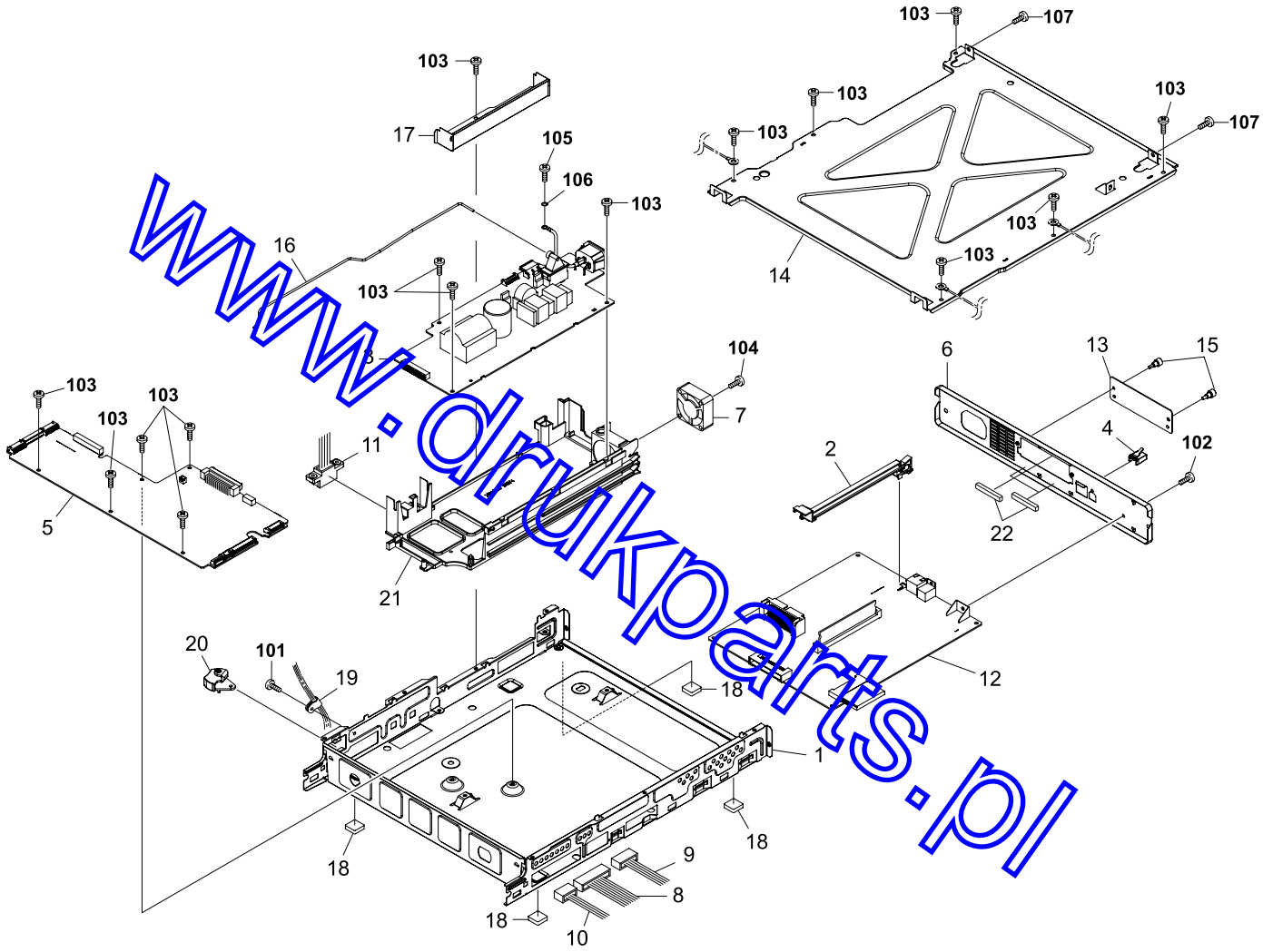

www.drukparts.pl

FIG. 4 Controller Box

SP	Ref. No.	Part.No.	Alternative.	Description	Quantity 110	120	230	240
	1	302D903011	2D903011	BOX CONTROLLER	1	1	1	1
	2	302D903071	2D903071	RAIL OPTION	1	1	1	1
⊙	3	302D945020	2D945020	SWITCHING REGULATOR /MPS3227L (16/17ppm EUR/USA)	1	1		
⊙	3	302HJ45010	2HJ45010	SWITCHING REGULATOR 230V ROHS (16ppm EUR)			1	1
⊙	3	302GV45010	2GV45010	SWITCHING REGULATOR /J (20/22ppm EUR/USA)	1	1		
⊙	3	302HK45010	2HK45010	SWITCHING REGULATOR 230V ROHS (20ppm EUR)			1	1
	4	302F939090	2F939090	CAP NETWORK	1	1	1	1
⊙	5	302HJ01130	2HJ01130	P.W.B ASSY ENGINE WITH SOFTWARE(SP) (16/17ppm EUR/USA)	1	1	1	1
⊙	5	302HK01090	2HK01090	P.W.B ASSY ENGINE WITH SOFTWARE(SP) (20/22ppm EUR/USA)	1	1	1	1
	6	302HJ39010	2HJ39010	PANEL REAR	1	1	1	1
⊙	7	302HJ44020	2HJ44020	FAN MOTOR	1	1	1	1
	8	302HJ46010	2HJ46010	CONN. CORD ASSY S03194	1	1	1	1
	9	302HJ46020	2HJ46020	CONN. CORD ASSY S03195	1	1	1	1
	10	302HJ46050	2HJ46050	CONN. CORD ASSY S03198	1	1	1	1
⊙	11	302HJ46070	2HJ46070	CONN. CORD ASSY S03202	1	1	1	1
⊙	12	302HJ80100	2HJ80100	P.W.B MAIN KIT (16/17ppm EUR/USA)	1	1	1	1
⊙	12	302HK80060	2HK80060	P.W.B.MAIN KIT (20/22ppm EUR/USA)	1	1	1	1
	13	303BH26021	3BH26021	PLATE OPTION	1	1	1	1
	14	5MMS884SD001	2D903020	LID CONTROLLER	1	1	1	1
⊙	15	5MMT263SN012++R	2D903100	SCREW OP	2	2	2	2
	16	5MMW803SD001	2D903060	ROD SW POWER	1	1	1	1
	17	5MMX733SD001	2D903040	BRACKET BOX	1	1	1	1
⊙	18	5MVX221RB014	2BS03110	FOOT	4	4	4	4
	19	5MVX321NP001++R	2D902760	SHIELD CLAMP	1	1	1	1
	20	5MVX433SH002	2BS03120	LEVER SW	1	1	1	1
	21	5MVX876SB009	2D903050	CASE PWB POWER	1	1	1	1
	22	7ZGSTGN1R033H01	ZG047920	SHIELD GASKET	2	2	2	2

SP	Ref. No.	Part.No.	Alternative.	Description	Quantity 110	120	230	240
	101	B4A03120		TP-A SCREW M3X12(TRIVALENT CHROMAT				
	102	5MBSPP3006NW++R	B0B03060	PAN HEAD SCREW(+) / M3 X 6 CRFREE				
	103	5MBTPB3006TW++R	B1A53060	BIND T.T SCREW(+) / M3 X 6 CRFREE S-T				
	104	5MBTPB3023WW++R	B1B73230	BIND T.T SCREW(+) / M3 X 23 CRFREE P-T				
	105	5MBTPB4006TW++R	B1A54060	BIND T.T SCREW(+) / M4 X 6 CRFREE S-T				
	106	5MBWG40854LD	CP003020	OT.LOCK WASHER / M4X8.5X0.4T SUS-DP (110V/120V only)				
	107	5MBTPB4010PW++R	B1A64100	BIND T.T SCREW(+) / M4 X 10 CRFREE P-T				

• Parts with "•" are component parts or sub-assemblies of the assembly appearing immediately above them.

• Parts with "⊙" indicate the spare parts.

• Parts with "• •" are component parts or sub-assembly with "•" appearing immediately above them.

www.drukparts.pl

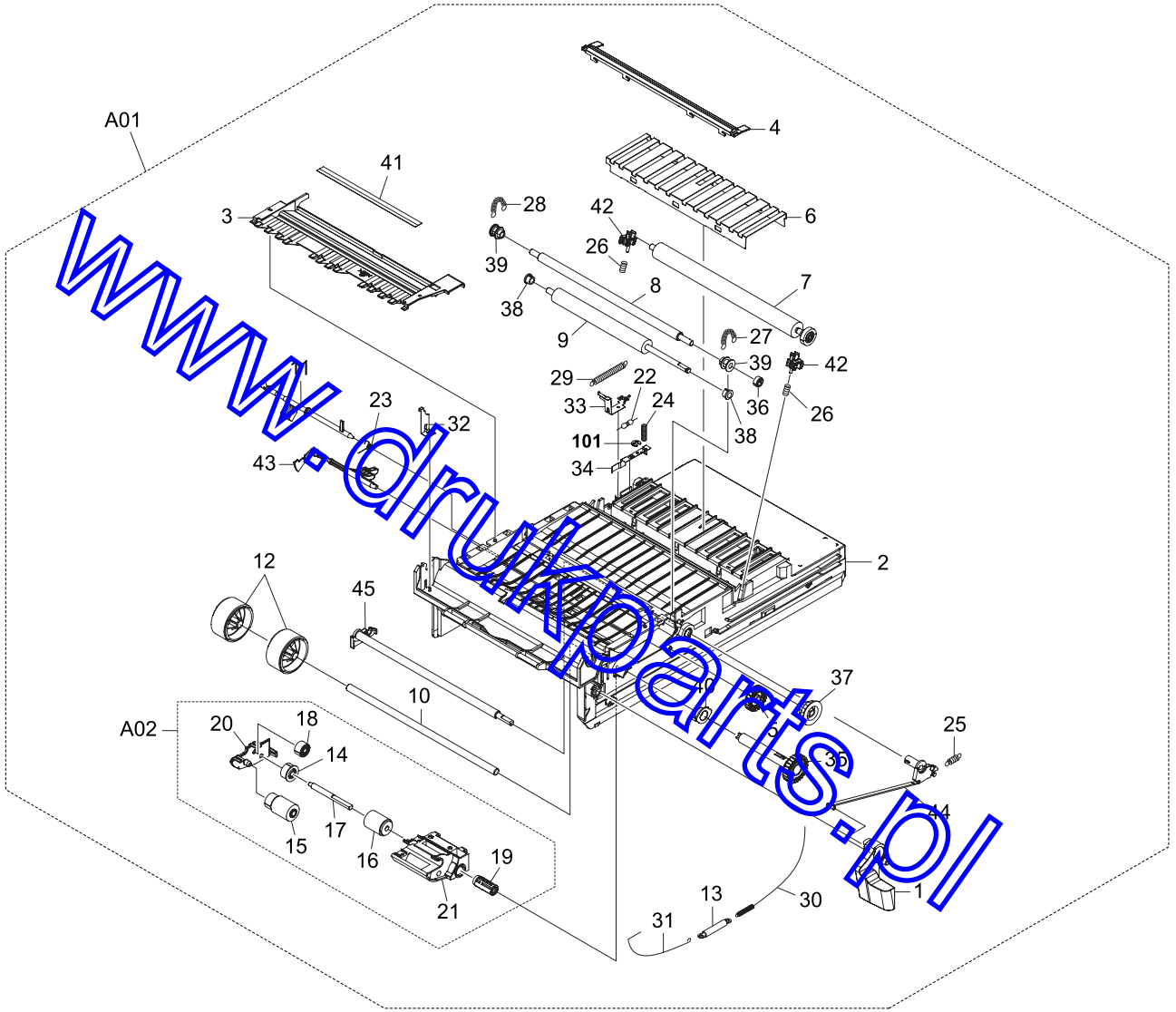

www.drukparts.pl

FIG. 5 Paper Feed Unit

2HJ/2HK

SP	Ref. No.	Part.No.	Alternative.	Description	Quantity 110	120	230	240
⊙	A01	302F393061	2F393061	FEED TRANS UNIT	1	1	1	1
	1	•2BS16431	2BS16431	LEVER LOCK	1	1	1	1
	2	•302D916051	2D916051	BASE FEED	1	1	1	1
	3	•302D916071	2D916071	GUIDE PAPER	1	1	1	1
⊙	4	•302D916081	2D916081	PAPER CHUTE	1	1	1	1
⊙	5	•302D916221	2D916221	GEAR IDLE Z23S	1	1	1	1
	6	•302F300670	2F300670	DISCHARGER ASSY	1	1	1	1
⊙	7	•302F300850	2F300850	ROLLER TRANSFER ASSY	1	1	1	1
⊙	8	•302F324000	2F324000	ROLLER REGIST UP	1	1	1	1
⊙	9	•302F324020	2F324020	ROLLER REGIST LOW	1	1	1	1
	10	•302F324030	2F324030	SHAFT ROLL GUIDE	1	1	1	1
⊙	11	•302F324040	2F324040	SENSOR DOC	1	1	1	1
⊙	12	•302FP06100	2FP06100	ROLLER GUIDE ASSY	2	2	2	2
	13	•302HJ46300	2HJ46300	CONN. CORD ASSY S03236	1	1	1	1
⊙	A02	•5AAYA37E++35	2BR68470	HOLDER FEED ASSY	1	1	1	1
⊙	14	••5AAVGEAR+037	2BR70440	GEAR PICKUP	1	1	1	1
⊙	15	••5AAVR0LL+047	2CL16090	ROLLER FEED ASSY	1	1	1	1
⊙	16	••5AAVR0LL+048	2CL16100	ROLLER PICKUP ASSY	1	1	1	1
	17	••5MMT664SN002	2BR16370	SHAFT PICKUP	1	1	1	1
	18	••5MVG137DN036	2BS16250	GEAR FEED IDLE Z29S	1	1	1	1
⊙	19	••5MVX376DN001	2BS16390	HOLDER RELEASE	1	1	1	1
	20	••5MVX642DH001	2BS16400	COVER BKT FEED	1	1	1	1
	21	••5MVX664SH004	2BS16420	BRACKET FEED	1	1	1	1
	22	•5FRHA3A10702+01	RH0A0040	M.GLAZE R. 100M 1W	1	1	1	1
	23	•5MMW161SD014	2D916260	SPRING ACTUATOR REG	1	1	1	1
	24	•5MMW241SX005	2B716150	SPRING TRANS R	1	1	1	1
	25	•5MMW251SD002	2BR16250	SPRING LOCK R	1			
	26	•5MMW251SX004	2D916060	SPRING TRANS	2	2	2	2
	27	•5MMW341LD008	2BR16240	SPRING REGIST R	1	1	1	1
	28	•5MMW341LD011	2D916250	SPRING REGIST L	1	1	1	1
	29	•5MMW641SD001	2D916130	SPRING EARTH B	1	1	1	1
	30	•5MMW641SD002	2D916270	SPRING EARTH C	1	1	1	1
	31	•5MMW641SD003	2D916280	WIRE EARTH M/P	1	1	1	1
	32	•5MMX422LD012	2D916140	PLATE EARTH MP	1	1	1	1
	33	•5MMX543LD006	2D916110	PLATE EARTH TC	1	1	1	1
	34	•5MMX543LD007	2D916210	PLATE EARTH FEED	1	1	1	1
⊙	35	•5MVG038DN002	2D916230	GEAR JOINT Z26S	1	1	1	1
⊙	36	•5MVG126DN015	2BS16240	GEAR REGIST Z19S	1	1	1	1
⊙	37	•5MVG148DN060	2BS16270	GEAR REG Z22S-Z32S	1	1	1	1
⊙	38	•5MVM176DN019	2B716270	BUSH POM A	2	2	2	2
⊙	39	•5MVM221DB002	2BS16290	BUSH REGIST	2	2	2	2
⊙	40	•5MVM222XN001	2BS16300	BUSH FEED	1	1	1	1
⊙	41	•5MVS721KF005	2D916150	SHEET REGIST	1	1	1	1
⊙	42	•5MVX322DB019	2BS16380	BUSH TRANSFER	2	2	2	2
⊙	43	•5MVX663SB013	2BS16410	ACTUATOR PAPER	1	1	1	1
	44	•5MVX733DN002	2D916090	HOOK RELEASE	1	1	1	1
	45	•5MVX843CB004	2BS16470	SHAFT RELEASE	1	1	1	1

SP	Ref. No.	Part.No.	Alternative.	Description	Quantity 110	120	230	240
	101	5MBCS2425XSP	D4000240	CS STOP RING /X2.4 X .25T S-BLK				

• Parts with "•" are component parts or sub-assemblies of the assembly appearing immediately above them.

• Parts with "⊙" indicate the spare parts.

• Parts with "• •" are component parts or sub-assembly with "•" appearing immediately above them.

www.drukparts.pl

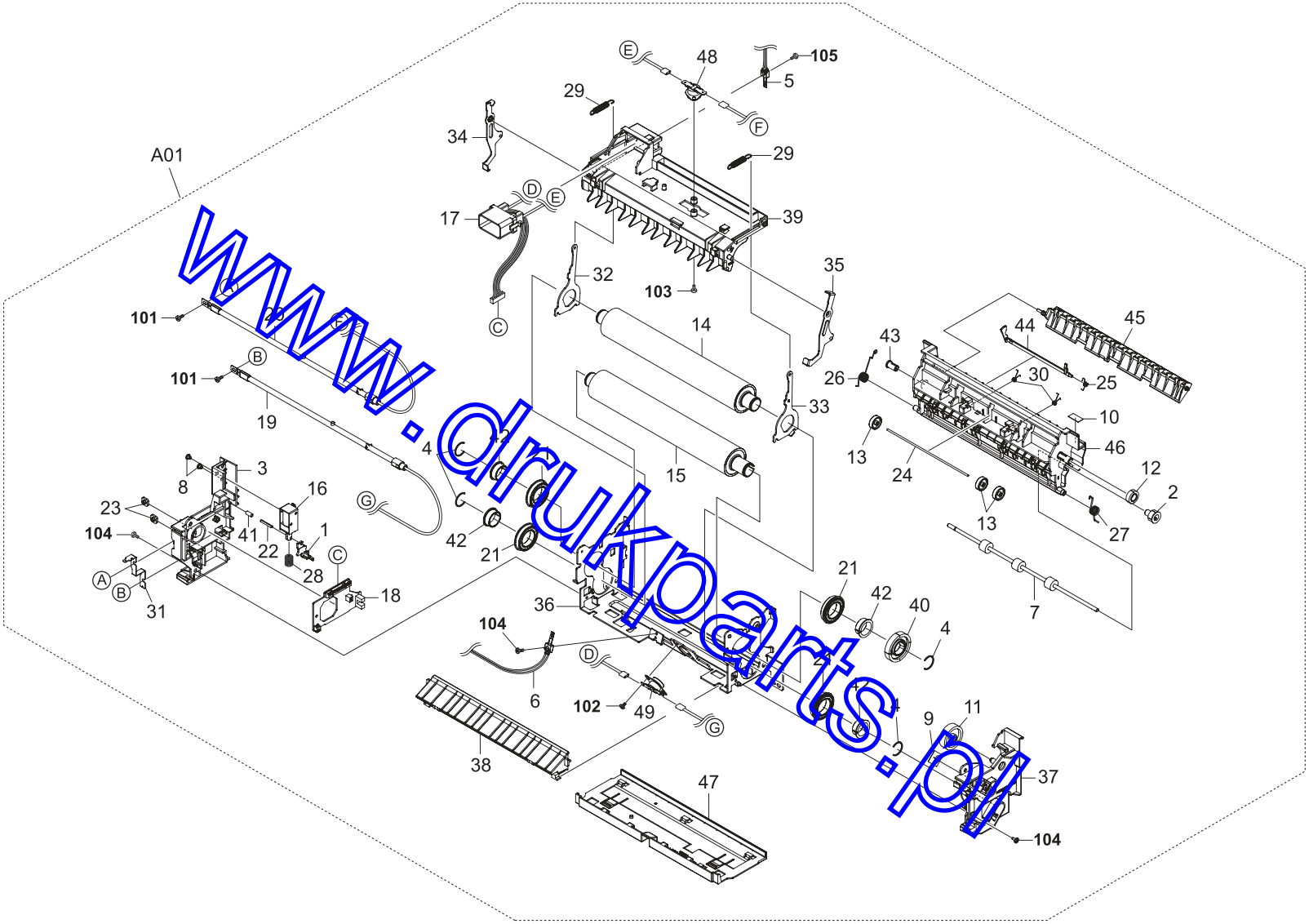

www.drukparts.pl

FIG. 6 Fuser Unit (16/17ppm EUR/USA)

SP	Ref. No.	Part.No.	Alternative.	Description	Quantity 110	120	230	240
⊙	A01	302F393081	2F393081	FK-510(U) FUSER UNIT (16/17ppm EUR/USA)	1	1		
⊙	A01	302F393071	2F393071	FK-510(E) FUSER UNIT (16ppm EUR)			1	1
	1	•302D920012	2D920012	ACTUATOR SOL	1	1	1	1
⊙	2	•302D920041	2D920041	GEAR EXIT Z15S	1	1	1	1
	3	•302D925010	2D925010	COVER FUSER L	1	1	1	1
	4	•302D925020	2D925020	RING STOP	4	4	4	4
⊙	5	•302D927091	2D927091	THERMISTOR ASSY	1	1	1	1
⊙	6	•302D927091	2D927091	THERMISTOR ASSY	1	1	1	1
⊙	7	•302F325000	2F325000	ROLLER EXIT	1	1	1	1
	8	•302F325010	2F325010	STUD SCREW M3	2	2	2	2
	9	•302F325020	2F325020	SEAL HEATER R	1	1	1	1
	10	•302F325030	2F325030	LABEL EXIT	1	1	1	1
⊙	11	•302F325040	2F325040	GEAR JOINT Z36	1	1	1	1
⊙	12	•302F325060	2F325060	GEAR IDLE HR	1	1	1	1
⊙	13	•302F325070	2F325070	PULLEY EXIT	3	3	3	3
⊙	14	•302HJ25030	2HJ25030	ROLLER FIX UP	1	1	1	1
⊙	15	•302HJ25040	2HJ25040	ROLLER FIX LOW	1	1	1	1
⊙	16	•302HJ44010	2HJ44010	SOLENOID		1	1	1
	17	•302HJ46100	2HJ46100	CONN. CORD ASSY S03205	1	1		
	17	•302HJ46090	2HJ46090	CONN. CORD ASSY S03204			1	1
⊙	18	•5AAPRIFC1030AHP	2D901460	P.W.B.ASSY KP-970 FUSER	1	1	1	1
⊙	19	•5FZPB1212920101	WP0A0540	LAMP HEATER LOW 120V	1	1		
⊙	19	•5HZPB2411520201	2D920450	LAMP HEATER LOW 240V			1	1
⊙	20	•5HZPB1214220901	2D920440	LAMP HEATER UP 120V	1	1		
⊙	20	•5HZPB2412120801	2D920400	LAMP HEATER UP 240V			1	1
⊙	21	•5MBE6804ZZNR	2D920350	FUSER BEARING	4	4	4	4
	22	•5MBP2518WXSP	E0025180	SPRING PIN /M2.5 X 18 S-BLK	1	1	1	1
	23	•5MMS111SL002	2BY20050	NUT FUSER A	2	2	2	2
	24	•5MMT722SZ001	2BR20370	SHAFT EXIT	1	1	1	1
	25	•5MMW151LD007	2D920280	SPRING ACTUATOR	1	1	1	1
	26	•5MMW161SD012	2D920260	SPRING EXIT L	1	1	1	1
	27	•5MMW161SD013	2D920270	SPRING EXIT R	1	1	1	1
	28	•5MMW261LJ032	2BM21060	SPRING SOL	1	1	1	1
	29	•5MMW361SD005	2D920250	SPRING PRESS	2	2	2	2
	30	•5MMW501LD003	2D920300	SPRING PULLEY EXIT	2	2	2	2
	31	•5MMX641RD001	2D920220	PLATE HEATER L	1	1	1	1
	32	•5MMX641SD003	2D920170	PLATE PRESS L	1	1	1	1
	33	•5MMX641SD004	2D920180	PLATE PRESS R	1	1	1	1
	34	•5MMX641SD005	2D920190	PLATE RELEASE L	1	1	1	1
	35	•5MMX641SD006	2D920200	PLATE RELEASE R	1	1	1	1
	36	•5MMX876SD003	2D920050	FRAME FUSER	1	1	1	1
	37	•5MVB663KB003	2D920120	COVER FUSER R	1	1	1	1
	38	•5MVB833KB004	2D920330	GUIDE ENTRANCE LOW	1	1	1	1
	39	•5MVB866KB002	2D920320	FRAME FUSER UP	1	1	1	1
⊙	40	•5MVG154XN001	2D920020	GEAR HEAT Z43S	1	1	1	1
	41	•5MVM111RB002	2BR20450	RUBBER PIN	1	1	1	1
⊙	42	•5MVM180XN002	2D920030	BUSH FUSER	4	4	4	4
⊙	43	•5MVM266DN006	2BS02290	BUSH FD	1	1	1	1
⊙	44	•5MVX731CB004	2D920150	ACTUATOR FUSER	1	1	1	1
	45	•5MVX833CB006	2D920140	GUIDE CHANGE	1	1	1	1
	46	•5MVX865KB003	2D920080	GUIDE EXIT	1	1	1	1
	47	•5MVX872KB001	2D920130	COVER FUSER LOW	1	1	1	1
⊙	48	•YF0A1530	5FYFFQ15001++03	THERMOSTAT 250V150C	1	1	1	1
⊙	49	•YF0A1530	5FYFFQ15001++03	THERMOSTAT 250V150C	1	1	1	1
	101	5MBSP43006NW++R	B4A03060	TP HEAD SCREW(+) / M3 X 6 DRFREE				
	102	5MBTPB3006TW++R	B1A53060	BIND T.T SCREW(+) / M3 X 6 CRFREE S-T				
	103	5MBTPB3008PW++R	B1A63080	BIND T.T SCREW(+) / M3 X 8 CRFREE P-T				
	104	5MBTPB3008TW++R	B1A53080	BIND T.T SCREW(+) / M3 X 8 CRFREE S-T				
	105	5MBTPB3012PW++R	B1A63120	BIND T.T SCREW(+) / M3 X 12 CRFREE P-T				

• Parts with "•" are component parts or sub-assemblies of the assembly appearing immediately above them.

• Parts with "⊙" indicate the spare parts.

• Parts with "• •" are component parts or sub-assembly with "•" appearing immediately above them.

www.drukparts.pl

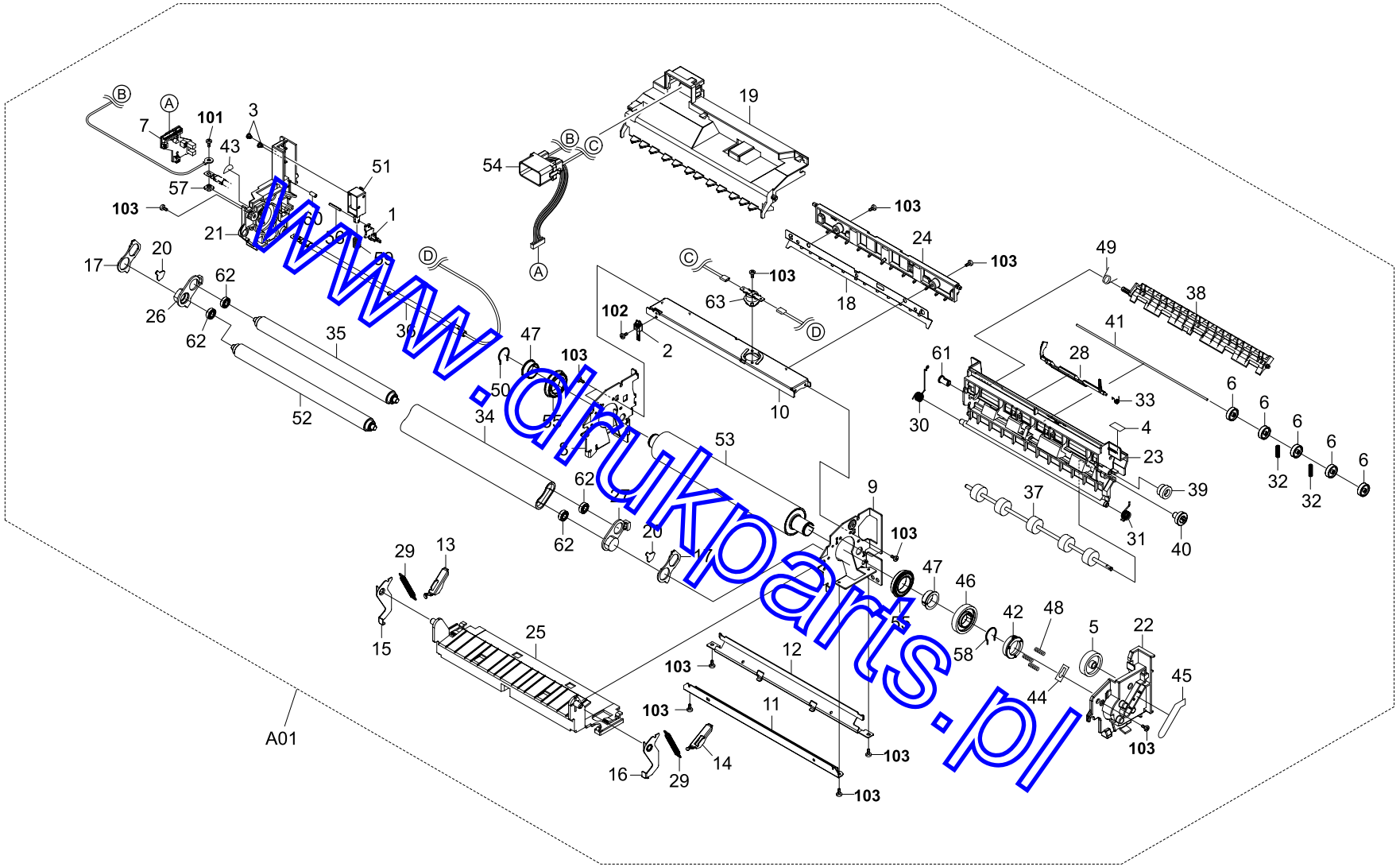

www.drukparts.pl

FIG. 6 Fuser Unit (20/22ppm EUR/USA)

SP	Ref. No.	Part.No.	Alternative.	Description	Quantity 110	120	230	240
⊙	A01	302HK93050	2HK93050	FK-521(U) FUSER UNIT (20/22ppm EUR/USA)	1	1		
⊙	A01	302HK93040	2HK93040	FK-521(E) FUSER UNIT (20ppm EUR)			1	1
	1	•302D920012	2D920012	ACTUATOR SOL	1	1	1	1
⊙	2	•302D927091	2D927091	THERMISTOR ASSY	1	1	1	1
	3	•302F325010	2F325010	STUD SCREW M3	2	2	2	2
	4	•302F325030	2F325030	LABEL EXIT	1	1	1	1
⊙	5	•302F325040	2F325040	GEAR JOINT Z36	1	1	1	1
⊙	6	•302F325070	2F325070	PULLEY EXIT	5	5	5	5
⊙	7	•302F401280	2F401280	P.W.B. ASSY FUSER	1	1	1	1
	8	•302F425012	2F425012	PLATE FUSER L	1	1	1	1
	9	•302F425021	2F425021	PLATE FUSER R	1	1	1	1
	10	•302F425030	2F425030	STAY FUSER A	1	1	1	1
	11	•302F425040	2F425040	STAY FUSER B	1	1	1	1
	12	•302F425050	2F425050	STAY FUSER C	1	1	1	1
	13	•302F425060	2F425060	PLATE PRESS L	1	1	1	1
	14	•302F425070	2F425070	PLATE PRESS R	1	1	1	1
	15	•302F425080	2F425080	PLATE RELEASE L	1	1	1	1
	16	•302F425090	2F425090	PLATE RELEASE R		1	1	1
	17	•302F425100	2F425100	PLATE PITCH	2	2	2	2
	18	•302F425110	2F425110	PLATE SEPARATOR	1	1	1	1
	19	•302F425120	2F425120	COVER FUSER UP	1	1	1	1
	20	•302F425130	2F425130	PULLEY PRESS	2	2	2	2
	21	•302F425141	2F425141	COVER FUSER L	1	1	1	1
	22	•302F425151	2F425151	COVER FUSER R	1	1	1	1
	23	•302F425161	2F425161	GUIDE EXIT	1	1	1	1
	24	•302F425171	2F425171	GUIDE EXIT UP	1	1	1	1
	25	•302F425180	2F425180	GUIDE ENTRANCE	1	1	1	1
	26	•302F425194	2F425194	HOLDER BELT L	1	1	1	1
	27	•302F425204	2F425204	HOLDER BELT R	1	1	1	1
⊙	28	•302F425212	2F425212	ACTUATOR FUSER	1	1	1	1
⊙	29	•302F425220	2F425220	SPRING PRESS	2	2	2	2
	30	•302F425230	2F425230	SPRING EXIT L	1	1	1	1
	31	•302F425240	2F425240	SPRING EXIT R	1	1	1	1
	32	•302F425250	2F425250	SPRING PULLEY EXIT	2	2	2	2
	33	•302F425260	2F425260	SPRING ACTUATOR	1	1	1	1
⊙	34	•302F425270	2F425270	BELT FUSER	1	1	1	1
⊙	35	•302F425290	2F425290	ROLLER BELT	1	1	1	1
⊙	36	•302F425311	2F425311	LAMP HEATER 120V	1	1		
⊙	36	•302F425301	2F425301	LAMP HEATER 240V			1	1
⊙	37	•302F425330	2F425330	ROLLER EXIT	1	1	1	1
	38	•302F425341	2F425341	GUIDE CHANGE	1	1	1	1
⊙	39	•302F425350	2F425350	GEAR IDLE Z15S-Z18S	1	1	1	1
⊙	40	•302F425361	2F425361	GEAR EXIT Z18S	1	1	1	1
	41	•302F425370	2F425370	SHAFT EXIT	1	1	1	1
	42	•302F425390	2F425390	SLEEVE FUSER GEAR	1	1	1	1
	43	•302F425400	2F425400	SEAL LUMP HOLD R	1	1	1	1
	44	•302F425410	2F425410	SEAL LUMP HOLD L	1	1	1	1
	45	•302F425420	2F425420	SEAL COVER FUSER	1	1	1	1
⊙	46	•302F425440	2F425440	GEAR HEAT Z43S	1	1	1	1
⊙	47	•302F425450	2F425450	BUSH FUSER	2	2	2	2
	48	•302F425460	2F425460	SPRING SLEEVE	3	3	3	3
	49	•302F425470	2F425470	SPRING CHANGE	1	1	1	1
⊙	50	•302F425480	2F425480	RING STOP	1	1	1	1
⊙	51	•302HJ44010	2HJ44010	SOLENOID	1	1	1	1
⊙	52	•302HK25020	2HK25020	ROLLER BELT A	1	1	1	1
⊙	53	•302HK25030	2HK25030	ROLLER HEAT	1	1	1	1
	54	•302HK46010	2HK46010	CONN. CORD ASSY S03206	1	1	1	1
⊙	55	•5MBE6804ZZNR	2D920350	FUSER BEARING /6804ZZNR M/20D	2	2	2	2
	56	•5MBP2518WXSP	E0025180	SPRING PIN	1	1	1	1
⊙	57	•5MMS111SL002	2BY20050	NUT FUSER A	1	1	1	1
⊙	58	•5MMW171LD007	2D920310	RING STOP	1	1	1	1
	59	•5MMW261LJ032	2BM21060	SPRING SOL	1	1	1	1
	60	•5MVM111RB002	2BR20450	RUBBER PIN	1	1	1	1
⊙	61	•5MVM266DN006	2BS02290	BUSH FD	1	1	1	1
⊙	62	•7BE686ZZ++++H01	BE010080	FUSER BELT BEARING	4	4	4	4
⊙	63	•YF0A1530	5FYFFQ15001++03	THERMOSTAT 250V150 C/CS-7SA 6A	1	1	1	1
	101	5MBSP43006NW++R	B4A03060	TP HEAD SCREW(+) / M3 X 6 DRFREE				
	102	5MBTPB3008TW++R	B1A53080	BIND T.T SCREW(+) / M3 X 8 CRFREE S-T				
	103	5MBTPB3006TW++R	B1A53060	BIND T.T SCREW(+) / M3 X 6 CRFREE S-T				

• Parts with "•" are component parts or sub-assemblies of the assembly appearing immediately above them.

• Parts with "⊙" indicate the spare parts.

• Parts with "• •" are component parts or sub-assembly with "•" appearing immediately above them.

www.drukparts.pl

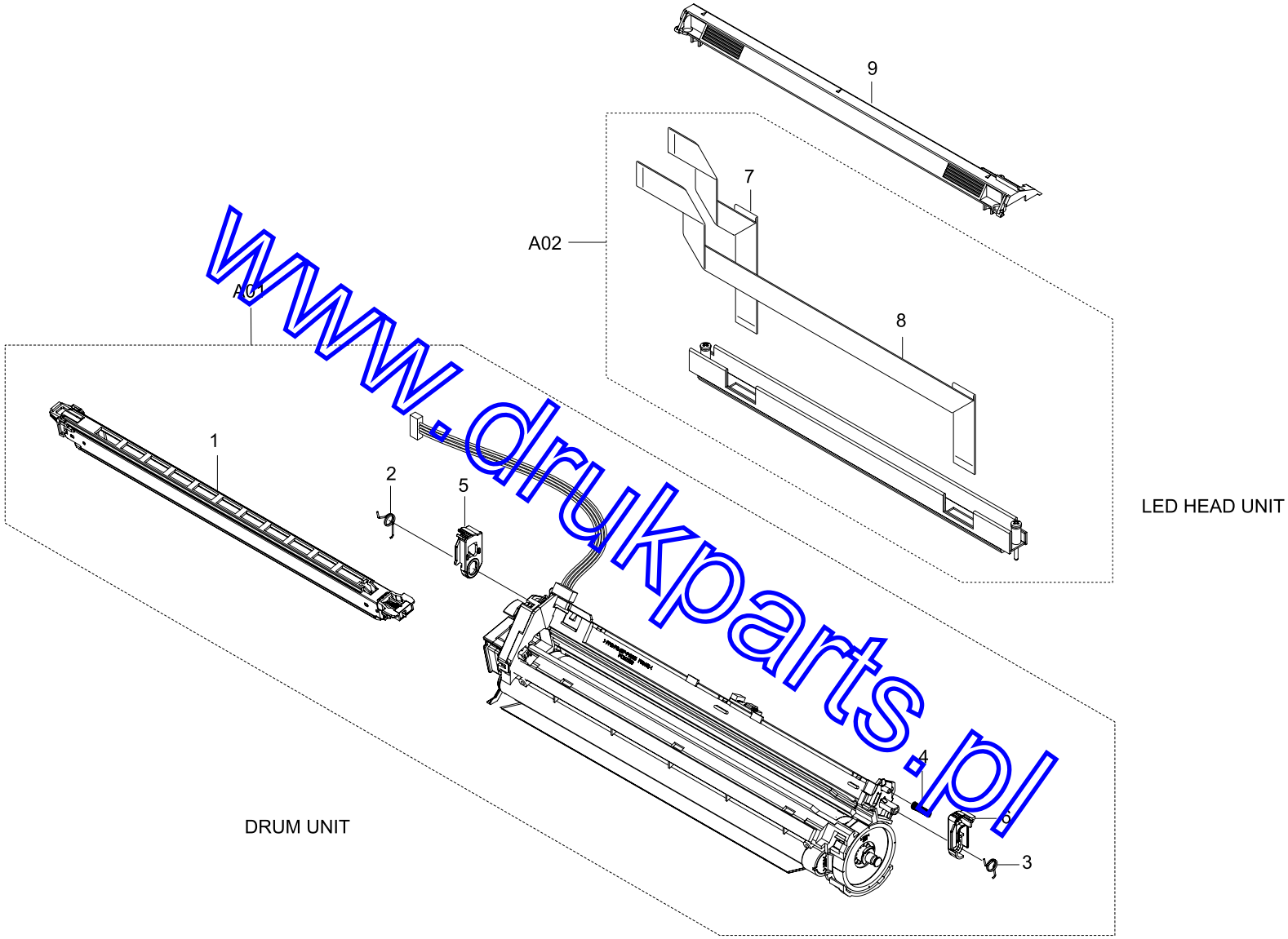

www.drukparts.pl

FIG. 7 Drum Unit / LED Unit

SP	Ref. No.	Part.No.	Alternative.	Description	Quantity 110	120	230	240
⊙	A01	302HJ93010	2HJ93010	DK-511 DRUM UNIT (16/17ppm EUR/USA)	4	4	4	4
⊙	A01	302HK93010	2HK93010	DK-521 DRUM UNIT (20/22ppm EUR/USA)	4	4	4	4
⊙	1	•302F393190	2F393190	MC-510 MCH ASSY	4	4	4	4
	2	•5MMW161LD056	2D908360	SPRING LOCK L	4	4	4	4
	3	•5MMW161LD057	2D908370	SPRING LOCK R	4	4	4	4
	4	•5MMW241LD024	2D908000	SPRING EARTH	4	4	4	4
	5	•5MVX421SL001	2D908340	LEVER DRUM L	4	4	4	4
	6	•5MVX422SL003	2D908350	LEVER DRUM R	4	4	4	4
⊙	A02	302F393091	2F393091	LK-510 LED HEAD UNIT (16/17ppm EUR/USA)	4	4	4	4
⊙	A02	302F493082	2F493082	LK-520 LED HEAD UNIT (20/22ppm EUR/USA)	4	4	4	4
⊙	7	•302F446110	2F446110	CONN.CORD ASSY S03143	4	4	4	4
⊙	8	•302F446120	2F446120	CONN.CORD ASSY S03144	4	4	4	4
⊙	9	302F311021	2F311021	COVER LED	4	4	4	4

www.drukparts.pl

• Parts with "•" are component parts or sub-assemblies of the assembly appearing immediately above them.

• Parts with "⊙" indicate the spare parts.

• Parts with "• •" are component parts or sub-assembly with "•" appearing immediately above them.

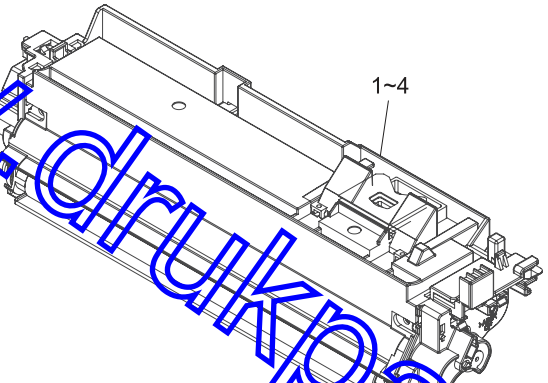

www.drukparts.pl

FIG. 8 Developer Unit

SP	Ref. No.	Part.No.	Alternative.	Description	Quantity			
					110	120	230	240
⊙	1	302HJ93020	2HJ93020	DV-520Y DLP UNIT Y (16ppm EUR)	1		1	1
⊙	1	302HJ93090	2HJ93090	DV-522Y DLP UNIT Y (17ppm USA)		1		
⊙	1	302F393031	2F393031	DV-510Y DLP UNIT Y (20ppm EUR)	1		1	1
⊙	1	302F393131	2F393131	DV-512Y DLP UNIT Y (22ppm USA)		1		
⊙	2	302HJ93030	2HJ93030	DV-520M DLP UNIT M (16ppm EUR)	1		1	1
⊙	2	302HJ93100	2HJ93100	DV-522M DLP UNIT M (17ppm USA)		1		
⊙	2	302F393051	2F393051	DV-510M DLP UNIT M (20ppm EUR)	1		1	1
⊙	2	302F393141	2F393141	DV-512M DLP UNIT M (22ppm USA)		1		
⊙	3	302HJ93040	2HJ93040	DV-520C DLP UNIT C (16ppm EUR)	1		1	1
⊙	3	302HJ93110	2HJ93110	DV-522C DLP UNIT C (17ppm USA)		1		
⊙	3	302F393041	2F393041	DV-510C DLP UNIT C (20ppm EUR)	1		1	1
⊙	3	302F393151	2F393151	DV-512C DLP UNIT C (22ppm USA)		1		
⊙	4	302HJ93050	2HJ93050	DV-520K DLP UNIT K (16ppm EUR)	1		1	1
⊙	4	302HJ93120	2HJ93120	DV-522K DLP UNIT K (17ppm USA)		1		
⊙	4	302F393021	2F393021	DV-510K DLP UNIT K (20ppm EUR)	1		1	1
⊙	4	302F393161	2F393161	DV-512K DLP UNIT K (22ppm USA)		1		

www.drukparts.pl

• Parts with "•" are component parts or sub-assemblies of the assembly appearing immediately above them.

• Parts with "⊙" indicate the spare parts.

• Parts with "• •" are component parts or sub-assembly with "•" appearing immediately above them.

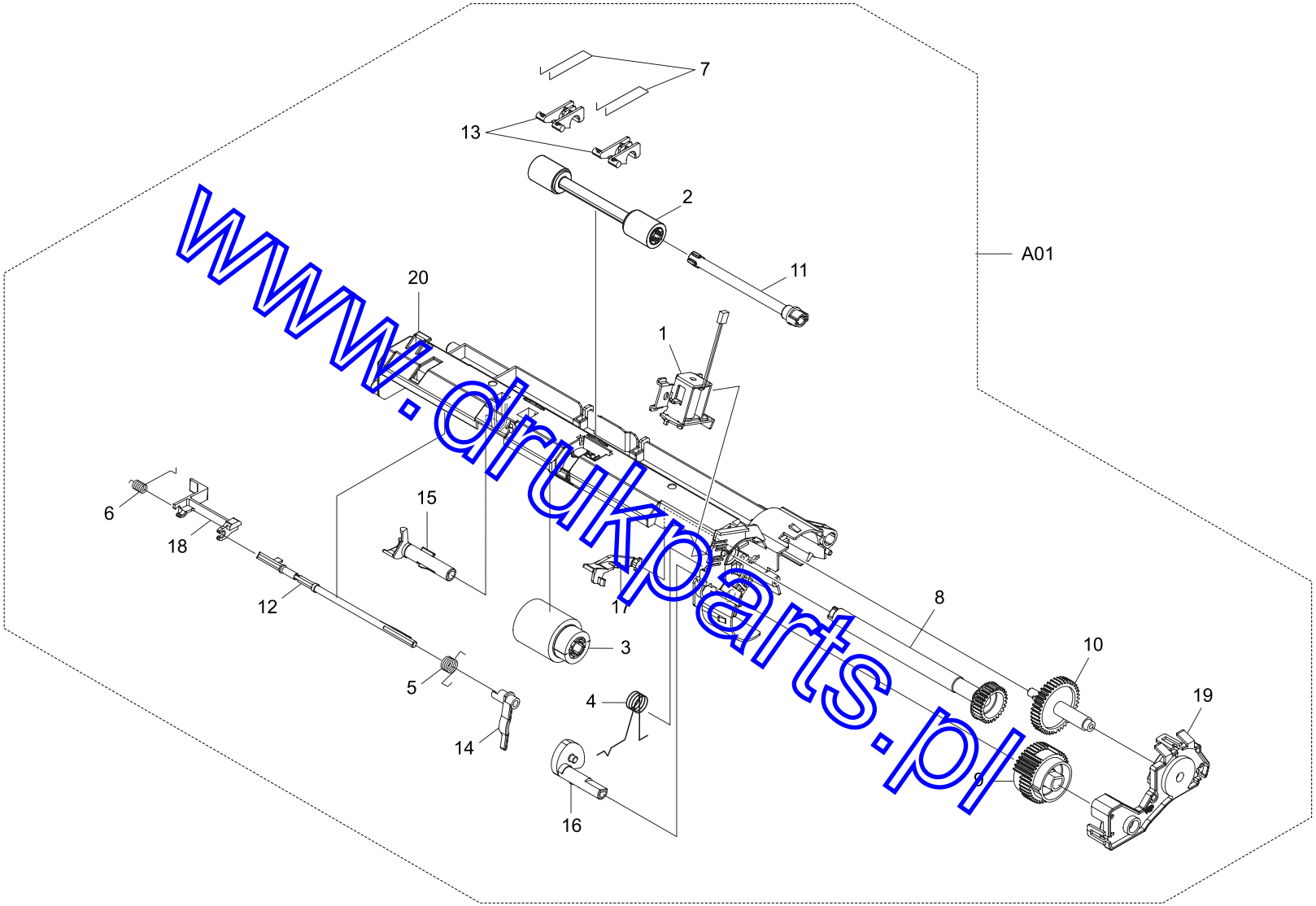

www.drukparts.pl

FIG. 9 Frame MP Assembly

SP	Ref. No.	Part.No.	Alternative.	Description	Quantity 110	120	230	240
⊙	A01	302D968391	2D968391	FRAME MP ASSY	1	1	1	1
⊙	1	•302D944011	2D944011	SOLENOID M/P ASSY	1	1	1	1
⊙	2	•5AAVR0LL+050	2CL16120	ROLL MID M/P ASSY	1	1	1	1
⊙	3	•5AAVR0LL+051	2CL16130	ROLLER M/P ASSY	1	1	1	1
	4	•5MMW161LD043	2BR02450	SPRING CAM M/P	1	1	1	1
	5	•5MMW161SD009	2BR02530	SP ACTUATOR M/P C	1	1	1	1
	6	•5MMW161SD010	2BR02520	SP ACTUATOR M/P B	1	1	1	1
	7	•5MMW601SD001	2BR02440	SPRING MID M/P	2	2	2	2
⊙	8	•5MVG133DN008	2BS02230	GEAR M/P Z27	1	1	1	1
	9	•5MVG148DN063	2BS02280	GEAR M/P Z40	1	1	1	1
	10	•5MVG158XN005	2D916010	GEAR MID Z42S	1	1	1	1
	11	•5MVT676CB003	2BS02320	SHAFT AND B	1	1	1	1
⊙	12	•5MVT754SB001	2BS02330	ACTUATOR M/P A	1	1	1	1
⊙	13	•5MVX321DN014	2BS02340	BUSH MID M/P	2	2	2	2
⊙	14	•5MVX421SB021	2BS02360	ACTUATOR M/P C	1	1	1	1
⊙	15	•5MVX422DN007	2BS02370	HOLDER FEED M/P	1	1	1	1
⊙	16	•5MVX433DN002	2BS02380	CAM M/P	1	1	1	1
	17	•5MVX522DN004	2BS02400	LEVER CAM	1	1	1	1
⊙	18	•5MVX621SB010	2BS02410	ACTUATOR M/P B	1	1	1	1
	19	•5MVX662DN003	2BS02440	HOLDER CLUTCH M/P	1	1	1	1
	20	•5MVX866CH011	2FP02130	FRAME M/P	1	1	1	1

www.drukparts.pl

• Parts with "•" are component parts or sub-assemblies of the assembly appearing immediately above them.

• Parts with "⊙" indicate the spare parts.

• Parts with "• •" are component parts or sub-assembly with "•" appearing immediately above them.

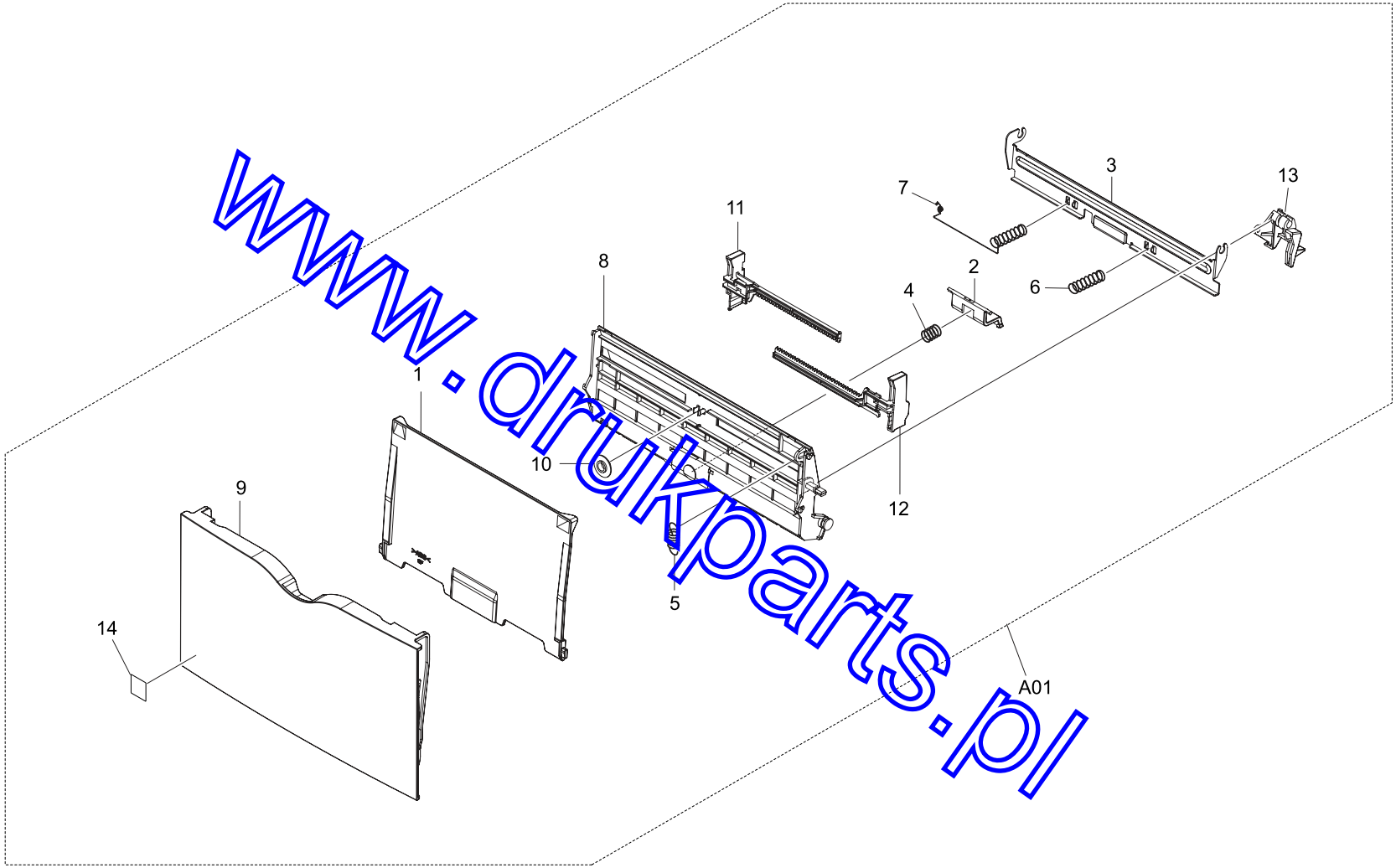

www.drukparts.pl

FIG. 10 MP Tray

SP	Ref. No.	Part.No.	Alternative.	Description	Quantity 110	120	230	240
⊙	A01	302HJ00530	2HJ00530	TRAY M/P ASSY		1		
⊙	A01	5AAVCASET282	2D900010	TRAY M/P ASSY	1		1	1
	1	•302D906012	2D906012	TRAY M/P	1	1	1	1
⊙	2	•5AAVCASET248	2BR00140	SEPARATOR M/P ASSY	1	1	1	1
⊙	3	•5AAVCASET249	2BR00150	BOTTOM MULTI ASSY	1	1	1	1
	4	•5MMW261LD039	2BS06160	SPRING SEPARATOR	1	1	1	1
	5	•5MMW261SM001	2BS06170	SPRING LOCK M/P	1	1	1	1
	6	•5MMW461SD004	2BS06190	SP BOTTOM M/P R	1	1	1	1
	7	•5MMW461SD006	2D916020	SP BOTTOM M/P L	1	1	1	1
	8	•5MVB864SH009	2BS06250	BASE M/P	1	1	1	1
⊙	9	•5MVB878SH001	2D906020	COVER M/P	1	1	1	1
	10	•5MVG127DH001	2B700380	GEAR MANUAL	1	1	1	1
	11	•5MVL673DH003	2D906030	GUIDE M/P L	1	1	1	1
	12	•5MVL673DH004	2D906040	GUIDE M/P R	1	1	1	1
	13	•5MVX533DN002	2BS06460	BRACKET BOTTOM	1	1	1	1
⊙	14	302G634070	2G634070	LABEL ENERGY STAR	1	1	1	1

www.drukparts.pl

• Parts with "•" are component parts or sub-assemblies of the assembly appearing immediately above them.

• Parts with "⊙" indicate the spare parts.

• Parts with "• •" are component parts or sub-assembly with "•" appearing immediately above them.

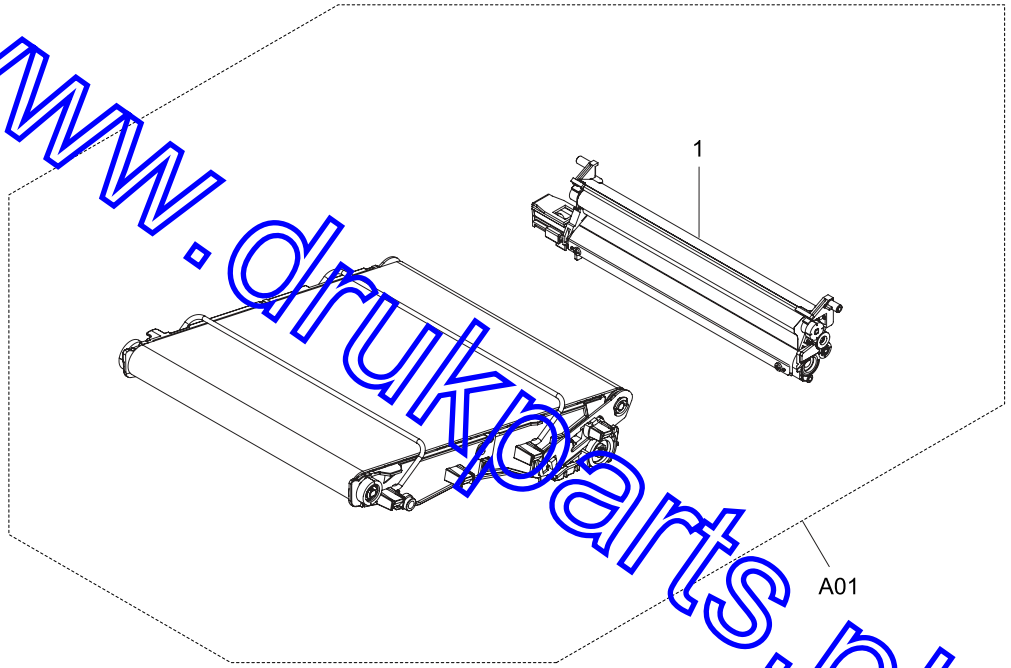

www.drukparts.pl

FIG. 11 Primary Transfer Unit

SP	Ref. No.	Part.No.	Alternative.	Description	Quantity 110	120	230	240
⊙	A01	302HJ93060	2HJ93060	TR-511 PRE TRANSFER UNIT (16/17ppm EUR/USA)	1	1	1	1
⊙	A01	302HK93060	2HK93060	TR-521 PRE TRANSFER UNIT (20/22ppm EUR/USA)	1	1	1	1
⊙	1	•302F393200	2F393200	CL-510 CLEANING UNIT	1	1	1	1

www.drukparts.pl

• Parts with "•" are component parts or sub-assemblies of the assembly appearing immediately above them.

• Parts with "⊙" indicate the spare parts.

• Parts with "• •" are component parts or sub-assembly with "•" appearing immediately above them.

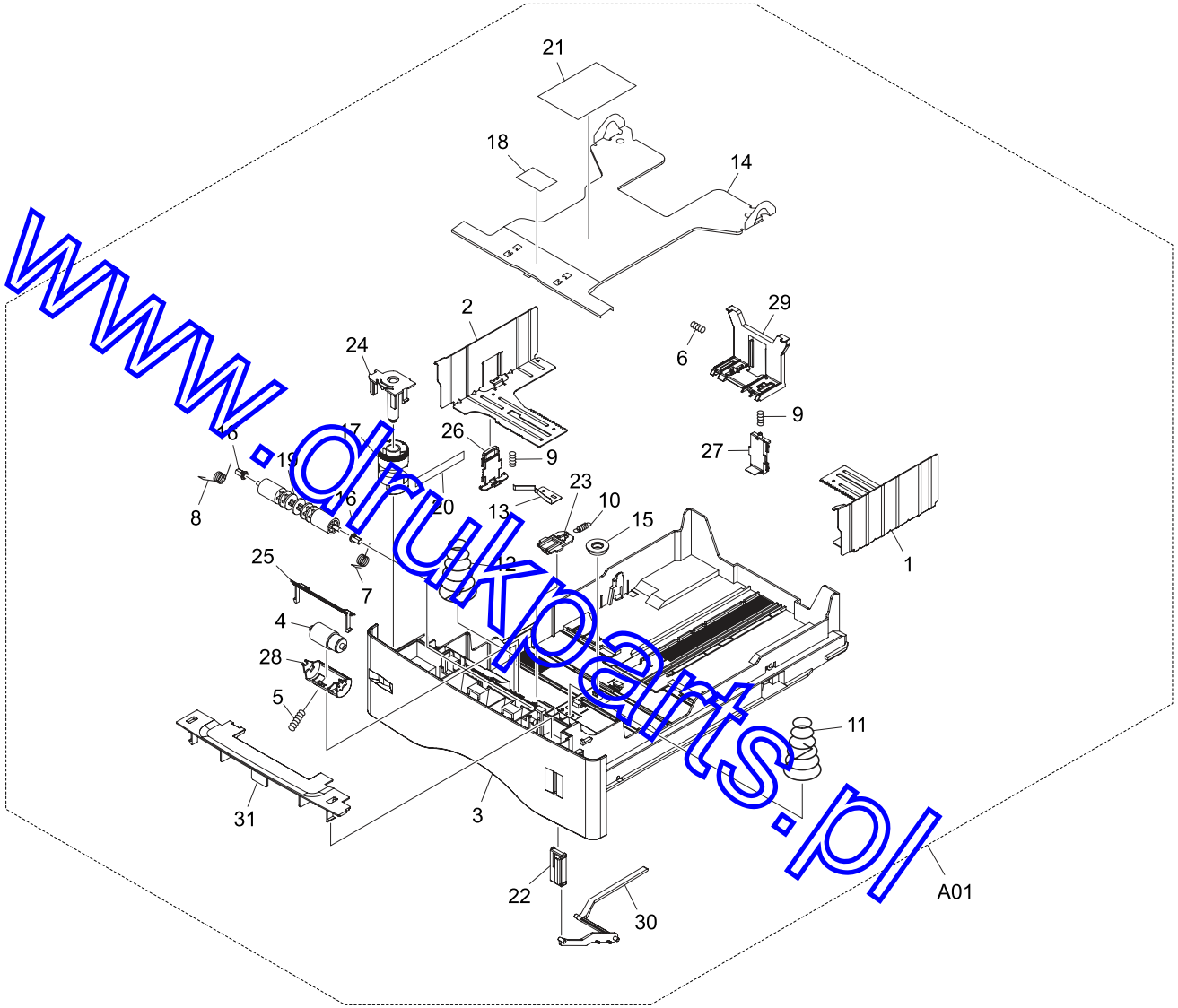

www.drukparts.pl

FIG. 12 Paper Cassette

SP	Ref. No.	Part.No.	Alternative.	Description	Quantity 110	120	230	240
⊙	A01	2BR93380	5PLPXDSAPKX	PC-60LG(A4) CASSETTE ASSY	1			
⊙	A01	5PLPXCUAPKX	2BR93390	PC-60LG(LTR) CASSETTE ASSY		1		
⊙	A01	5PLPXZ7APKX	2BR93360	PC-60LG(A4) CASSETTE ASSY			1	1
	1	•302BS06051	2BS06051	PLATE SIDE R	1	1	1	1
	2	•302BS06061	2BS06061	PLATE SIDE L	1	1	1	1
	3	•303DD06011	3DD06011	BASE CASSETTE LGL	1	1	1	1
⊙	4	•5AAVR0LL+052	2BR06520	RETARD ROLL ASSY	1	1	1	1
	5	•5MMW151LD004	2BS06090	SPRING RETARD	1	1	1	1
	6	•5MMW151SD003	2BS06100	SPRING END	1	1	1	1
	7	•5MMW161LD044	2BM22440	SPRING FEED R	1	1	1	1
	8	•5MMW161LD045	2BS06120	SPRING FEED L	1	1	1	1
	9	•5MMW166LD010	2B700070	SPRING LOCK GUIDE	2	2	2	2
	10	•5MMW251LD048	2BS06150	SUB STOPPER BOTTOM	1	1	1	1
	11	•5MMW682LD006	2BR06380	SPRING BOTTOM	1			
	11	•5MMW682LD004	2BS06200	SPRING BOTTOM		1	1	1
	12	•5MMW682LD007	2BR06390	SPRING BOTTOM EARTH	1			
	12	•5MMW682LD005	2BS06210	SPRING BOTTOM EARTH		1	1	1
	13	•5MMX653LD004	2BS06220	EARTH PLATE	1	1	1	1
	14	•5MMX883SD004	2BS06230	PLATE BOTTOM	1	1	1	1
	15	•5MVG127DB046	2B700190	GEAR CASSETTE		1	1	1
⊙	16	•5MVM164DN007	2BS06320	BUSH4	2	2	2	2
	17	•5MVM586SH001	2B700210	DIAL CASSETTE	1	1	1	1
⊙	18	•5MVS421RN004	2BS06390	SHEET FRICTION	1			
⊙	18	•5MVS421RN006	2FP06040	SHEET FRICTION		1	1	1
⊙	19	•5MVT774DN001	2BS06410	ROLLER FEED	1	1	1	1
	20	•5MVVL171WN03	3DD06160	LABEL SIZE LGL	1	1	1	1
	21	•5MVVL221GE1J	2BR06510	LABEL OPERATION J	1			
	21	•5MVVL221GE1H	2BS06430	LABEL OPERATION		1	1	1
	22	•5MVX422SD002	2BS06440	INDICATER PAPER	1	1	1	1
⊙	23	•5MVX432DN005	2BS06450	LOCK BOTTOM	1	1	1	1
	24	•5MVX543DH002	2BS06470	HOLDER DIAL	1	1	1	1
	25	•5MVX632SH005	2BS06480	GUIDE RETARD	1	1	1	1
	26	•5MVX642DG001	2BS06490	LOCK LEVER SIDE	1	1	1	1
	27	•5MVX642DG002	2BS06500	LOCK LEVER END	1	1	1	1
	28	•5MVX644DN001	2BS06510	HOLDER RETARD	1	1	1	1
	29	•5MVX664DN001	2BS06520	END FENCE	1	1	1	1
⊙	30	•5MVX764DN001	2BS06530	LEVER INDICATOR	1	1	1	1
	31	•5MVX853SH003	2BS06540	COVER ROLLER	1	1	1	1

www.drukparts.pl

• Parts with "•" are component parts or sub-assemblies of the assembly appearing immediately above them.

• Parts with "⊙" indicate the spare parts.

• Parts with "• •" are component parts or sub-assembly with "•" appearing immediately above them.

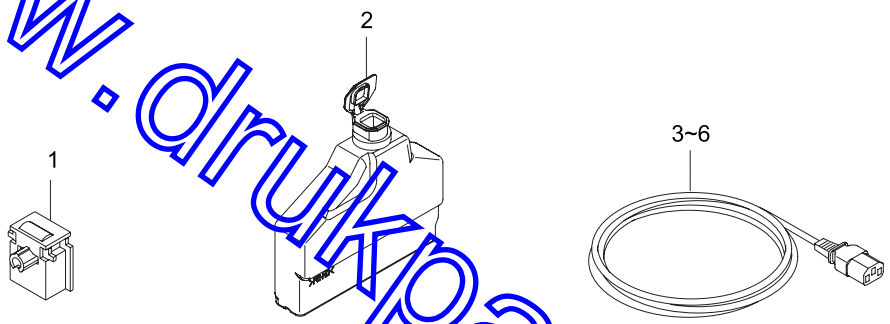

www.drukparts.pl

FIG. 13 Accessories

SP	Ref. No.	Part.No.	Alternative.	Description	Quantity			
					110	120	230	240
⊙	1	5AAYTK20++07	2B570060	GC-3 KIT	1	1	1	1
⊙	2	302D993241	2D993241	WT-500	2	2	2	2
	3	3065027601	65027601	AC CORD ASSY	1			
	3	2DC27410	2DC27410	AC CORD ASSY		1		
	3	2BJ27300	2BJ27300	AC CORD ASSY (KMA 220V)			1	
	3	302FV45040	2FV45040	AC CORD ASSY (KMAUS)				1
	4	5AACAC480BSA++P	2A827840	AC CORD ASSY (KMUK)			1	
	5	302FV45020	2FV45020	AC CORD ASSY (Excl. KMUK)			1	
	6	7AAACCSG+10H002	AA047510	AC CORD ASSY (KMSG)			1	

www.drukparts.pl

• Parts with "•" are component parts or sub-assemblies of the assembly appearing immediately above them.

• Parts with "⊙" indicate the spare parts.

• Parts with "• •" are component parts or sub-assembly with "•" appearing immediately above them.

FIG. 14 Packing Assemblies

SP	Ref. No.	Part.No.	Alternative.	Description	Quantity			
					110	120	230	240
⊙	1	302HJ00340	2HJ00340	PACKING ASSY (17ppm USA)		1		
⊙	1	302HJ00320	2HJ00320	PACKING ASSY (16ppm EUR)	1		1	1
⊙	2	302HK00210	2HK00210	PACKING ASSY (22ppm USA)		1		
⊙	2	302HK00190	2HK00190	PACKING ASSY (20ppm EUR)	1		1	1
⊙	3	302F450080	2F450080	POLY BAG	1	1	1	1

www.drukparts.pl

• Parts with "•" are component parts or sub-assemblies of the assembly appearing immediately above them.

• Parts with "⊙" indicate the spare parts.

• Parts with "• •" are component parts or sub-assembly with "•" appearing immediately above them.

SP	Part.No.	Alternative.	Description	Fig.No.
⊙	2B720380	5MVG127DW004	GEAR IDLE Z16	2
	2BJ27300	2BJ27300	AC CORD ASSY (KMA 220V)	13
⊙	2BR93380	5PLPXDSAPKX	PC-60LG(A4) CASSETTE ASSY	12
	2BS16431	2BS16431	LEVER LOCK	5
	2DC27410	2DC27410	AC CORD ASSY	13
	302BS06051	2BS06051	PLATE SIDE R	12
	302BS06061	2BS06061	PLATE SIDE L	12
	302D902311	2D902311	ROD INTERLOCK	2
	302D902372	2D902372	COVER HARNESS	2
⊙	302D902391	2D902391	BRACKET FD GEAR	2
	302D902542	2D902542	BRACKET FAN	2
	302D902551	2D902551	PLATE EARTH FD	2
	302D903011	2D903011	BOX CONTROLLER	4
	302D903071	2D903071	RAT OPTION	4
⊙	302D904042	2D904042	COVER SIDE	1
⊙	302D904053	2D904053	COVER REAR	1
	302D906012	2D906012	TRAY M/P	10
⊙	302D915211	2D915211	GEAR DRIVE FUSER Z22	3
	302D916051	2D916051	BASE FEED	5
	302D916071	2D916071	GUIDE PAPER	5
⊙	302D916081	2D916081	PAPER CHUTE	5
⊙	302D916221	2D916221	GEAR IDLE Z23S	5
	302D920012	2D920012	ACTUATOR SOL	6
⊙	302D920041	2D920041	GEAR EXIT Z15S	6
⊙	302D922041	2D922041	GEAR Z35S	3
⊙	302D922051	2D922051	GEAR Z30S	3
⊙	302D922061	2D922061	GEAR Z38S-Z14S	3
⊙	302D922071	2D922071	GEAR Z38S	3
⊙	302D922081	2D922081	GEAR CL Z21S	3
⊙	302D922101	2D922101	GEAR Z93S-Z24S	3
⊙	302D922112	2D922112	GEAR Z48S	3
⊙	302D922161	2D922161	GEAR Z21H-Z20H	3
⊙	302D922181	2D922181	GEAR Z72H-Z22H	3
	302D925010	2D925010	COVER FUSER L	6
	302D925020	2D925020	RING STOP	6
⊙	302D927091	2D927091	THERMISTOR ASSY	6
⊙	302D944011	2D944011	SOLENOID M/P ASSY	9
⊙	302D945020	2D945020	SWITCHING REGULATOR /MPS3227L	4
⊙	302D968391	2D968391	FRAME MP ASSY	9
⊙	302D993241	2D993241	WT-500	13
⊙	302F300371	2F300371	COVER LEFT ASSY	1
⊙	302F300390	2F300390	COVER RIGHT ASSY	1
⊙	302F300430	2F300430	WASTE TONER ASSY	2
	302F300660	2F300660	BRACKET HV MAIN ASSY	3
	302F300670	2F300670	DISCHARGER ASSY	5
⊙	302F300830	2F300830	COVER TOP ASSY	1
⊙	302F300850	2F300850	ROLLER TRANSFER ASSY	5
⊙	302F300890	2F300890	BRACKET FD GEAR ASSY	2
⊙	302F302010	2F302010	ROLLER FD LOW	2
	302F302020	2F302020	SPRING EARTH FD	2

SP	Part.No.	Alternative.	Description	Fig.No.
	302F302030	2F302030	PIN CONTACT BIAS	2
⊙	302F304020	2F304020	ROLLER FD	1
⊙	302F304030	2F304030	DISCHARGER FD	1
⊙	302F311021	2F311021	COVER LED	7
⊙	302F324000	2F324000	ROLLER REGIST UP	5
⊙	302F324020	2F324020	ROLLER REGIST LOW	5
	302F324030	2F324030	SHAFT ROLL GUIDE	5
⊙	302F324040	2F324040	SENSOR DOC	5
⊙	302F325000	2F325000	ROLLER EXIT	6
	302F325010	2F325010	STUD SCREW M3	6
	302F325020	2F325020	SEAL HEATER R	6
	302F325030	2F325030	LABEL EXIT	6
⊙	302F325040	2F325040	GEAR JOINT Z36	6
⊙	302F325060	2F325060	GEAR IDLE Z18	6
⊙	302F325070	2F325070	PULLEY EXIT	6
	302F331010	2F331010	PLATE DRIVE MAIN	3
⊙	302F331022	2F331022	GEAR Z40H	3
	302F331030	2F331030	BRACKET MOTOR	3
	302F331041	2F331041	PLATE IDLE ARM	3
	302F331050	2F331050	LEVER PLATE IDLE	3
⊙	302F331060	2F331060	CAM GEAR Z34H	3
⊙	302F331081	2F331081	LEVER CAM	3
	302F331090	2F331090	SPRING IDLE ARM	3
	302F331100	2F331100	SPRING LEVER	3
⊙	302F331120	2F331120	CLUTCH REGIST	3
⊙	302F331130	2F331130	CLUTCH FEED	3
	302F331140	2F331140	BRACKET DRIVE FEED	3
	302F331150	2F331150	BRACKET HV MAIN	3
⊙	302F331160	2F331160	HOOK CRANK	3
	302F331170	2F331170	SPRING HOOK CRANK	3
	302F331180	2F331180	PIN HV CONTACT	3
	302F331190	2F331190	CONTACT MAIN B	3
	302F331200	2F331200	SPRING HV MAIN	3
⊙	302F331210	2F331210	SHAFT CLUTCH B	3
	302F331220	2F331220	SHAFT CLUTCH	3
⊙	302F331250	2F331250	GEAR Z43S	3
⊙	302F331260	2F331260	GEAR Z56H-Z20S	3
⊙	302F344011	2F344011	FAN MOTOR	2
⊙	302F344021	2F344021	FAN MOTOR	3
⊙	302F344031	2F344031	FAN MOTOR	2
⊙	302F344040	2F344040	DC MOTOR	3
⊙	302F344051	2F344051	STEPPING MOTOR FEED	3
⊙	302F345011	2F345011	TRANS ASSY HI VOLTAGE MAIN	2
⊙	302F345021	2F345021	TRANS ASSY HI VOLTAGE DLP	2
⊙	302F393021	2F393021	DV-510K DLP UNIT K	8
⊙	302F393031	2F393031	DV-510Y DLP UNIT Y	8
⊙	302F393041	2F393041	DV-510C DLP UNIT C	8
⊙	302F393051	2F393051	DV-510M DLP UNIT M	8
⊙	302F393061	2F393061	FEED TRANS UNIT	5
⊙	302F393071	2F393071	FK-510(E) FUSER UNIT	6

• Parts with "⊙" indicate the spare parts.

www.drukparts.pl

SP	Part.No.	Alternative.	Description	Fig.No.
⊙	302F393081	2F393081	FK-510(U) FUSER UNIT	6
⊙	302F393091	2F393091	LK-510 LED HEAD UNIT	7
⊙	302F393111	2F393111	DR-510B DRIVE FEED UNIT	3
⊙	302F393121	2F393121	DR-510C DRIVE FUSER UNIT	3
⊙	302F393131	2F393131	DV-512Y DLP UNIT Y	8
⊙	302F393141	2F393141	DV-512M DLP UNIT M	8
⊙	302F393151	2F393151	DV-512C DLP UNIT C	8
⊙	302F393161	2F393161	DV-512K DLP UNIT K	8
⊙	302F393190	2F393190	MC-510 MCH ASSY	7
⊙	302F393200	2F393200	CL-510 CLEANING UNIT	11
⊙	302F401280	2F401280	P.W.B. ASSY FUSER	6
	302F425012	2F425012	PLATE FUSER L	6
	302F425021	2F425021	PLATE FUSER R	6
	302F425030	2F425030	STAY FUSER A	6
	302F425040	2F425040	STAY FUSER B	6
	302F425050	2F425050	STAY FUSER C	6
	302F425060	2F425060	PLATE PRESS L	6
	302F425070	2F425070	PLATE PRESS R	6
	302F425080	2F425080	PLATE RELEASE L	6
	302F425090	2F425090	PLATE RELEASE R	6
	302F425100	2F425100	PLATE PITCH	6
	302F425110	2F425110	PLATE SEPARATOR	6
	302F425120	2F425120	COVER FUSER UP	6
	302F425130	2F425130	PULLEY PRESS	6
	302F425141	2F425141	COVER FUSER L	6
	302F425151	2F425151	COVER FUSER R	6
	302F425161	2F425161	GUIDE EXIT	6
	302F425171	2F425171	GUIDE EXIT UP	6
	302F425180	2F425180	GUIDE ENTRANCE	6
	302F425194	2F425194	HOLDER BELT L	6
	302F425204	2F425204	HOLDER BELT R	6
⊙	302F425212	2F425212	ACTUATOR FUSER	6
⊙	302F425220	2F425220	SPRING PRESS	6
	302F425230	2F425230	SPRING EXIT L	6
	302F425240	2F425240	SPRING EXIT R	6
	302F425250	2F425250	SPRING PULLEY EXIT	6
	302F425260	2F425260	SPRING ACTUATOR	6
⊙	302F425270	2F425270	BELT FUSER	6
⊙	302F425290	2F425290	ROLLER BELT	6
⊙	302F425301	2F425301	LAMP HEATER 240V	6
⊙	302F425311	2F425311	LAMP HEATER 120V	6
⊙	302F425330	2F425330	ROLLER EXIT	6
	302F425341	2F425341	GUIDE CHANGE	6
⊙	302F425350	2F425350	GEAR IDLE Z15S-Z18S	6
⊙	302F425361	2F425361	GEAR EXIT Z18S	6
	302F425370	2F425370	SHAFT EXIT	6
	302F425390	2F425390	SLEEVE FUSER GEAR	6
	302F425400	2F425400	SEAL LUMP HOLD R	6
	302F425410	2F425410	SEAL LUMP HOLD L	6
	302F425420	2F425420	SEAL COVER FUSER	6

SP	Part.No.	Alternative.	Description	Fig.No.
⊙	302F425440	2F425440	GEAR HEAT Z43S	6
⊙	302F425450	2F425450	BUSH FUSER	6
	302F425460	2F425460	SPRING SLEEVE	6
	302F425470	2F425470	SPRING CHANGE	6
⊙	302F425480	2F425480	RING STOP	6
⊙	302F431011	2F431011	STEPPING MOTOR FUSER	3
⊙	302F431021	2F431021	STEPPING MOTOR FEED	3
⊙	302F446110	2F446110	CONN.CORD ASSY S03143	7
⊙	302F446120	2F446120	CONN. CORD ASSY S03144	7
⊙	302F450080	2F450080	POLY BAG	14
⊙	302F493041	2F493041	DR-520B DRIVE FEED UNIT	3
⊙	302F493051	2F493051	DR-520C DRIVE FUSER UNIT	3
⊙	302F493082	2F493082	LK-520 LED HEAD UNIT	7
	302F939090	2F939090	CAP NETWORK	4
⊙	302FP06100	2FP06100	ROLLER GUIDE ASSY	5
	302FV45020	2FV45020	AC CORD ASSY (Excl. KMUK)	13
	302FV45040	2FV45040	AC CORD ASSY (KMAUS)	13
⊙	302G634070	2G634070	LABEL ENERGY STAR	10
⊙	302GV45010	2GV45010	SWITCHING REGULATOR /J	4
⊙	302HJ00010	2HJ00010	KEY BOARD ASSY	1
⊙	302HJ00020	2HJ00020	SENSOR ID ASSY	2
⊙	302HJ00040	2HJ00040	BRACKET HV ASSY /C5015	2
⊙	302HJ00050	2HJ00050	TONER MOTOR ASSY	2
⊙	302HJ00320	2HJ00320	PACKING ASSY	14
⊙	302HJ00340	2HJ00340	PACKING ASSY	14
⊙	302HJ00530	2HJ00530	TRAY M/P ASSY	10
⊙	302HJ01020	2HJ01010	P.W.BOARD ASSY LEDRLY	2
⊙	302HJ01100	2HJ01100	P.W.BOARD ASSY ENGRLY	3
⊙	302HJ01130	2HJ01130	P.W.B.ASSY ENGINE WITH SOFTWARE(SP)	4
⊙	302HJ01140	2HJ01140	P.W.BOARD ASSY SENSOR	2
⊙	302HJ04040	2HJ04040	PLATE EMBLEM	1
⊙	302HJ05020	2HJ05020	COVER PANEL	1
⊙	302HJ25030	2HJ25030	ROLLER FIX UP	6
⊙	302HJ25040	2HJ25040	ROLLER FIX LOW	6
⊙	302HJ31010	2HJ31010	STEPPING MOTOR PRO	3
⊙	302HJ31020	2HJ31020	STEPPING MOTOR FUSER	3
	302HJ39010	2HJ39010	PANEL REAR	4
⊙	302HJ44010	2HJ44010	SOLENOID	6
⊙	302HJ44020	2HJ44020	FAN MOTOR	4
⊙	302HJ45010	2HJ45010	SWITCHING REGULATOR 230V ROHS	4
	302HJ46010	2HJ46010	CONN. CORD ASSY S03194	4
	302HJ46020	2HJ46020	CONN. CORD ASSY S03195	4
	302HJ46040	2HJ46040	CONN. CORD ASSY S03197	2
	302HJ46050	2HJ46050	CONN. CORD ASSY S03198	4
	302HJ46060	2HJ46060	CONN. CORD ASSY S03199	2
⊙	302HJ46070	2HJ46070	CONN. CORD ASSY S03202	4
	302HJ46080	2HJ46080	CONN. CORD ASSY S03203	2
	302HJ46090	2HJ46090	CONN. CORD ASSY S03204	6
	302HJ46100	2HJ46100	CONN. CORD ASSY S03205	6
	302HJ46110	2HJ46110	CONN. CORD ASSY S03207	2

• Parts with "⊙" indicate the spare parts.

www.drukoars.pl

SP	Part.No.	Alternative.	Description	Fig.No.
	302HJ46170	2HJ46170	CONN. CORD ASSY S03213	2
	302HJ46180	2HJ46180	CONN. CORD ASSY S03215	2
	302HJ46210	2HJ46210	CONN. CORD ASSY S03219	2
	302HJ46230	2HJ46230	CONN. CORD ASSY S03221	2
	302HJ46300	2HJ46300	CONN. CORD ASSY S03236	5
⊙	302HJ80100	2HJ80100	P.W.B MAIN KIT	4
⊙	302HJ93010	2HJ93010	DK-511 DRUM UNIT	7
⊙	302HJ93020	2HJ93020	DV-520Y DLP UNIT Y	8
⊙	302HJ93030	2HJ93030	DV-520M DLP UNIT M	8
⊙	302HJ93040	2HJ93040	DV-520C DLP UNIT C	8
⊙	302HJ93050	2HJ93050	DV-520K DLP UNIT K	8
⊙	302HJ93060	2HJ93060	TR-511 PRE TRANSFER UNIT	11
⊙	302HJ93070	2HJ93070	DR-511A DRIVE PRO UNIT	3
⊙	302HJ93090	2HJ93090	DV-522Y DLP UNIT Y	8
⊙	302HJ93100	2HJ93100	DV-522M DLP UNIT M	8
⊙	302HJ93110	2HJ93110	DV-522C DLP UNIT C	8
⊙	302HJ93120	2HJ93120	DV-522K DLP UNIT K	8
⊙	302HK00010	2HK00010	KEY BOARD ASSY	1
⊙	302HK00100	2HK00100	BRACKET HV ASSY S03215E	2
⊙	302HK00190	2HK00190	PACKING ASSY	14
⊙	302HK00210	2HK00210	PACKING ASSY	14
⊙	302HK01020	2HK01020	P.W.BOARD ASSY LEDRLY	2
⊙	302HK01090	2HK01090	P.W.B.ASSY ENGINE WITH SOFTWARE(SP)	4
⊙	302HK05010	2HK05010	COVER PANEL	1
⊙	302HK25020	2HK25020	ROLLER BELT A	6
⊙	302HK25030	2HK25030	ROLLER HEAT	6
⊙	302HK31010	2HK31010	STEPPING MOTOR PRO	6
⊙	302HK45010	2HK45010	SWITCHING REGULATOR 230V ROHS	4
	302HK46010	2HK46010	CONN. CORD ASSY S03206	6
	302HK46040	2HK46040	CONN. CORD ASSY S03232	2
	302HK46050	2HK46050	CONN. CORD ASSY S03233	3
⊙	302HK80060	2HK80060	P.W.B.MAIN KIT	4
⊙	302HK93010	2HK93010	DK-521 DRUM UNIT	7
⊙	302HK93020	2HK93020	DR-521A DRIVE PRO UNIT	3
⊙	302HK93040	2HK93040	FK-521(E) FUSER UNIT	6
⊙	302HK93050	2HK93050	FK-521(U) FUSER UNIT	6
⊙	302HK93060	2HK93060	TR-521 PRE TRANSFER UNIT	11
	303BH26021	3BH26021	PLATE OPTION	4
	303DD06011	3DD06011	BASE CASSETTE LGL	12
	3065027601	65027601	AC CORD ASSY	13
	5AACAC480BSA++P	2A827840	AC CORD ASSY (KMUK)	13
⊙	5AAPRIFC1030AHP	2D901460	P.W.B.ASSY KP-970 FUSER	6
⊙	5AAVCASET248	2BR00140	SEPARATOR M/P ASSY	10
⊙	5AAVCASET249	2BR00150	BOTTOM MULTI ASSY	10
⊙	5AAVCASET282	2D900010	TRAY M/P ASSY	10
⊙	5AAVGEAR+037	2BR70440	GEAR PICKUP	5
⊙	5AAVGEAR+044	2D969180	GEAR Z29S ASSY	3
⊙	5AAVGEAR+045	2D969870	GEAR Z22S ASSY	3
⊙	5AAVR0LL+047	2CL16090	ROLLER FEED ASSY	5
⊙	5AAVR0LL+048	2CL16100	ROLLER PICKUP ASSY	5

SP	Part.No.	Alternative.	Description	Fig.No.
⊙	5AAVR0LL+050	2CL16120	ROLL MID M/P ASSY	9
⊙	5AAVR0LL+051	2CL16130	ROLLER M/P ASSY	9
⊙	5AAVR0LL+052	2BR06520	RETARD ROLL ASSY	12
⊙	5AAYA37E++35	2BR68470	HOLDER FEED ASSY	5
⊙	5AAYA80E++71	2D969810	BRACKET HV DLP K ASSY	2
⊙	5AAYA80E++72	2D969820	BRACKET HV DLP C ASSY	2
⊙	5AAYA80E++73	2D969830	BRACKET HV DLP Y ASSY	2
⊙	5AAYA80E++75	2D969860	CLEANER ID ASSY	2
⊙	5AAYTK20++07	2B570060	GC-3 KIT	13
⊙	5ESP01000101+01	SP000310	PUSH SWITCH 01 SN	2
	5FRHA3A10702+01	RH0A0040	M.GLAZE R. 100M 1W	5
⊙	5FSP03090001+01	SP0A0360	PUSH SWITCH 03 SN	2
⊙	5FZPB1212920101	WP0A0540	LAMP HEATER LOW 120V	6
⊙	5HZPB1214220901	2D920440	LAMP HEATER UP 120V	6
⊙	5HZPB2411520201	2D920450	LAMP HEATER LOW 240V	6
⊙	5HZPB2412120801	2D920400	LAMP HEATER UP 240V	6
⊙	5MBE6804ZZNR	2D920350	FUSER BEARING	6
	5MBP2518WXSP	E0025180	SPRING PIN /M2.5 X 18 S-BLK	6
	5MMB861SD004	2D902200	PLATE SHIELD PWB	2
	5MMS111SL002	2BY20050	NUT FUSER A	6
	5MMS632LD001	2D902320	PLATE EARTH HV A	2
⊙	5MMS656AX001	2D922260	SHEET MOTOR FEED	3
	5MMS866SD001	2D908510	PLATE FRAME DRUM	2
	5MMS884SD001	2D903020	LID CONTROLLER	4
⊙	5MMT263SN012++R	2D903100	SCREW OP	4
	5MMT664SN002	2BR16370	SHAFT PICKUP	5
	5MMT722SZ001	2BR20370	SHAFT EXIT	6
	5MMW151LD004	2BS06090	SPRING RETARD	12
	5MMW151LD007	2D920280	SPRING ACTUATOR	6
	5MMW151SD003	2BS06100	SPRING END	12
	5MMW161LD043	2BR02450	SPRING CAM M/P	9
	5MMW161LD044	2BM22440	SPRING FEED R	12
	5MMW161LD045	2BS06120	SPRING FEED L	12
	5MMW161LD056	2D908360	SPRING LOCK L	7
	5MMW161LD057	2D908370	SPRING LOCK R	7
	5MMW161SD009	2BR02530	SP ACTUATOR M/P C	9
	5MMW161SD010	2BR02520	SP ACTUATOR M/P B	9
	5MMW161SD012	2D920260	SPRING EXIT L	6
	5MMW161SD013	2D920270	SPRING EXIT R	6
	5MMW161SD014	2D916260	SPRING ACTUATOR REG	5
	5MMW166LD010	2B700070	SPRING LOCK GUIDE	12
⊙	5MMW171LD007	2D920310	RING STOP	6
	5MMW222LD002	2BR02280	SPRING LEVER EF	2
	5MMW222LD003	2D902580	SPRING CONTACT CLN	2
	5MMW241LD024	2D908000	SPRING EARTH	7
	5MMW241SX005	2B716150	SPRING TRANS R	5
⊙	5MMW251LD046	2BS04050	SPRING PULLEY	1
	5MMW251LD048	2BS06150	SP STOPPER BOTTOM	12
	5MMW251SD002	2BR16250	SPRING LOCK R	5
	5MMW251SX004	2D916060	SPRING TRANS	5

• Parts with "⊙" indicate the spare parts.

www.drukosfs.pl

SP	Part.No.	Alternative.	Description	Fig.No.
	5MMW261LD039	2BS06160	SPRING SEPARATOR	10
	5MMW261LD051	2BR02340	SP LOCK COVER M/P	2
	5MMW261LJ032	2BM21060	SPRING SOL	6
	5MMW261SM001	2BS06170	SPRING LOCK M/P	10
	5MMW311LD003	2B702130	SPRING HV CONTACT	3
	5MMW341LD008	2BR16240	SPRING REGIST R	5
	5MMW341LD011	2D916250	SPRING REGIST L	5
	5MMW361SD005	2D920250	SPRING PRESS	6
	5MMW451LD001	2B700570	SPRING INTER LOCK	2
	5MMW461SD004	2BS06190	SP BOTTOM M/P R	10
	5MMW461SD006	2D916020	SP BOTTOM M/P L	10
	5MMW463LD001	2D902570	SPRING FD LOW	1
	5MMW501LD003	2D920300	SPRING PULLEY EXIT	6
	5MMW601SD001	2BR02440	SPRING MID M/P	9
	5MMW641SD001	2D916130	SPRING EARTH P	5
	5MMW641SD002	2D916270	SPRING EARTH C	5
	5MMW641SD003	2D916280	WIRE EARTH M/P	5
	5MMW682LD004	2BS06200	SPRING BOTTOM	12
	5MMW682LD005	2BS06210	SPRING BOTTOM EARTH	12
	5MMW682LD006	2BR06380	SPRING BOTTOM	12
	5MMW682LD007	2BR06390	SPRING BOTTOM EARTH	12
	5MMW803SD001	2D903060	ROD SW POWER	4
	5MMX221SW002	3FW02530	CORD KEEP	2
	5MMX422LD012	2D916140	PLATE EARTH MP	5
	5MMX431LD017	2D902410	BRACKET ROLLER PINCH	2
	5MMX543LD006	2D916110	PLATE EARTH TC	5
	5MMX543LD007	2D916210	PLATE EARTH FEED	5
	5MMX632SD006	2D902380	PLATE EARTH FUSER	2
	5MMX641RD001	2D920220	PLATE HEATER L	6
	5MMX641SD003	2D920170	PLATE PRESS L	6
	5MMX641SD004	2D920180	PLATE PRESS R	6
	5MMX641SD005	2D920190	PLATE RELEASE L	6
	5MMX641SD006	2D920200	PLATE RELEASE R	6
	5MMX653LD004	2BS06220	EARTH PLATE	12
	5MMX733SD001	2D903040	BRACKET BOX	4
	5MMX763SD003	2D922090	PLATE DRIVE FUSER	3
	5MMX876SD003	2D920050	FRAME FUSER	6
	5MMX883SD004	2BS06230	PLATE BOTTOM	12
	5MMZ242LD002	2D902330	PLATE EARTH HV B	2
⊙	5MVB661XF001	2D902530	OZONE FILTER	2
	5MVB663KB003	2D920120	COVER FUSER R	6
	5MVB732XB002	2D922020	COVER DRIVE FEED	3
	5MVB833KB004	2D920330	GUIDE ENTRANCE LOW	6
⊙	5MVB855SH001	2FP04150	COVER FRONT	1
	5MVB864SH009	2BS06250	BASE M/P	10
	5MVB866KB002	2D920320	FRAME FUSER UP	6
⊙	5MVB878SH001	2D906020	COVER M/P	10
⊙	5MVB986SH026	2D904010	COVER TOP	1
⊙	5MVG038DN002	2D916230	GEAR JOINT Z26S	5
⊙	5MVG115DB002	2BM14540	GEAR WORM	3

SP	Part.No.	Alternative.	Description	Fig.No.
⊙	5MVG122DN009	2D922140	GEAR Z14-Z20	3
⊙	5MVG126DN015	2BS16240	GEAR REGIST Z19S	5
	5MVG127DB046	2B700190	GEAR CASSETTE	12
	5MVG127DH001	2B700380	GEAR MANUAL	10
⊙	5MVG127DN076	2BS02220	GEAR ROLL FD Z18	1,2
⊙	5MVG127DN122	2D902400	GEAR FD Z15-Z18	2
⊙	5MVG133DN008	2BS02230	GEAR M/P Z27	9
⊙	5MVG137DN014	2BS02240	GEAR IDLE Z25	2
	5MVG137DN036	2BS16250	GEAR FEED IDLE Z29S	5
⊙	5MVG138DN047	2BS02260	GEAR FD Z28	2
⊙	5MVG138DN048	2BD02270	GEAR FD Z29	2
⊙	5MVG148DN060	2BS16270	GEAR REG Z22S-Z32S	5
	5MVG148DN063	2BS02280	GEAR M/P Z40	9
⊙	5MVG154BN001	2D922130	GEAR Z43S	3
⊙	5MVG154XN001	2D920020	GEAR HEAT Z43S	6
	5MVG158XN005	2D916010	GEAR MID Z42S	9
	5MVL673DH003	2D906030	GUIDE M/P L	10
	5MVL673DH004	2D906040	GUIDE M/P R	10
	5MVM111RB002	2BR20450	RUBBER PIN	6
⊙	5MVM164DN007	2BS06320	BUSH4	12
⊙	5MVM176DN019	2B716270	BUSH POM A	5
⊙	5MVM176DN034	2D922240	BUSH SHAFT CLUTCH	3
⊙	5MVM176DN035	2D922250	BUSH FRAME	2
⊙	5MVM180XN002	2D920030	BUSH FUSER	6
⊙	5MVM221DB002	2BS16290	BUSH REGIST	5
⊙	5MVM222XN001	2BS16300	BUSH FEED	5
⊙	5MVM266DN006	2BS02290	BUSH FD	1,2,6
⊙	5MVM273DB006	2BS04170	ROLLER PINCH	1,2
⊙	5MVM331DN002	2D915200	BUSH DRIVE FUSER	3
	5MVM586SH001	2B700210	DIAL CASSETTE	12
⊙	5MVS221RN004	2BS06390	SHEET FRICTION	12
⊙	5MVS421RN006	2FP06040	SHEET FRICTION	12
⊙	5MVS721KF005	2D916150	SHEET REGIST	5
	5MVT776CB002	2BS02320	SHAFT MID B	9
⊙	5MVT784SB001	2BS02330	ACTUATOR M/P A	9
⊙	5MVT774DN001	2BS06410	ROLLER FEED	12
	5MVVL171WN03	2DD06410	LABEL SIZE LGL	12
	5MVVL221GE1H	2BS06430	LABEL OPERATION	12
	5MVVL221GE1J	2BR06510	LABEL OPERATION J	12
⊙	5MVX221RB014	2BS02310	FOOT	4
⊙	5MVX321DN014	2BS02340	BUSH MID M/P	9
	5MVX321NP001++R	2D902760	SHIELD CLAMP	4
⊙	5MVX322DB019	2BS16380	BUSH TRANSFER	5
	5MVX322DB023	2BS02350	LEVER EF	2
⊙	5MVX332DB015	2D904170	GUIDE STOCK	1
⊙	5MVX376DN001	2BS16390	HOLDER RELEASE	5
⊙	5MVX421SB021	2BS02360	ACTUATOR M/P C	9
	5MVX421SL001	2D908340	LEVER DRUM L	7
⊙	5MVX422DN007	2BS02370	HOLDER FEED M/P	9
	5MVX422SD002	2BS06440	INDICATER PAPER	12

• Parts with "⊙" indicate the spare parts.

www.drukons.ro

SP	Part.No.	Alternative.	Description	Fig.No.
	5MVX422SL003	2D908350	LEVER DRUM R	7
⊙	5MVX432DN005	2BS06450	LOCK BOTTOM	12
⊙	5MVX433DN002	2BS02380	CAM M/P	9
	5MVX433SH002	2BS03120	LEVER SW	4
	5MVX522DB006	2BS02390	LOCK COVER M/P	2
	5MVX522DN004	2BS02400	LEVER CAM	9
	5MVX533DN002	2BS06460	BRACKET BOTTOM	10
	5MVX543DH002	2BS06470	HOLDER DIAL	12
⊙	5MVX621SB010	2BS02410	ACTUATOR M/P B	9
	5MVX632SH005	2BS06480	GUIDE RETARD	12
	5MVX642DG001	2BS06490	LOCK LEVER SIDE	12
	5MVX642DG002	2BS06500	LOCK LEVER END	12
	5MVX642DH001	2BS16400	COVER BKT FEED	5
	5MVX644DN001	2BS06510	HOLDER RETARD	12
	5MVX662DN003	2BS02440	HOLDER CLUTCH M/P	9
⊙	5MVX663SB013	2BS16410	ACTUATOR PAPER	5
	5MVX664DN001	2BS06520	END FENCE	12
	5MVX664SH004	2BS16420	BRACKET FEED	5
⊙	5MVX731CB004	2D920150	ACTUATOR FUSER	6
⊙	5MVX732CB003	2BS04310	ACTUATOR FD	1
	5MVX733DN002	2D916090	HOOK RELEASE	5
⊙	5MVX764DN001	2BS06530	LEVER INDICATOR	12
	5MVX833CB006	2D920140	GUIDE CHANGE	6
	5MVX843CB004	2BS16470	SHAFT RELEASE	5
	5MVX852CH002	2BS04340	FRAME FD	1
	5MVX853SH003	2BS06540	COVER ROLLER	12
	5MVX865KB003	2D920080	GUIDE EXIT	6
	5MVX866CH011	2FP02130	FRAME M/P	9
	5MVX866XB003	2D904060	FRAME FD LOW	1
	5MVX872KB001	2D920130	COVER FUSER LOW	6
	5MVX876SB009	2D903050	CASE PWB POWER	4
⊙	5PLPXCUAPKX	2BR93390	PC-60LG(LTR) CASSETTE ASSY	12
⊙	5PLPXZ7APKX	2BR93360	PC-60LG(A4) CASSETTE ASSY	12
	7AAACCSG+10H002	AA047510	AC CORD ASSY (KMSG)	13
⊙	7BE686ZZ++++H01	BE010080	FUSER BELT BEARING	6
⊙	7NXEESX1235AH01	2D902860	PT.SENSOR EE-SX1235A	2
	7ZGSTGN1R033H01	ZG047920	SHIELD GASKET	4
⊙	YF0A1530	5FYFFQ15001++03	THERMOSTAT 250V150C	6

• Parts with "⊙" indicate the spare parts.

www.drukparts.pl