9 Parts and diagrams

- Order parts, accessories, and supplies
- Customer self-repair parts
- Printer
- Input accessories
- Output accessories
- Alphabetical parts list
- Numerical parts list

www.drukparts.pl

Order parts, accessories, and supplies

Several methods are available for ordering parts, supplies, and accessories.

Order directly from HP

You can obtain the following items directly from HP:

- **Replacement parts:**Outside the United States, order parts by contacting your local authorized HP service center. To order replacement parts in the U.S., go to the following Web sites:
  - HP Parts Store: www.hp.com/buy/parts
  - Partsurfer: www.partsurfer.hp.com
  - HP Parts Portal: www.hp.com/go/HPparts
- **Supplies and accessories:** To order supplies in the U.S., go to www.hp.com/go/ljsupplies. To order supplies worldwide, go to www.hp.com/ghp/buyonline.html. To order accessories, go to www.hp.com/support/cljcp6015.

Order directly through the software

HP Easy Printer Care and HP ToolboxFX are product management tools designed to make product configuration, monitoring, supplies ordering, troubleshooting, and updating as simple and efficient as possible.

www.drukparts.pl

www.drukparts.pl

Customer self-repair parts

Customer self-repair parts

Description	Part number	Self-repair level
Control-panel overlay assembly, EN/FR, ES/PT	Q3931-60103	Level 1 (A)
Control-panel overlay assembly, EN/FR, DE/IT	Q3931-60104	Level 1 (A)
Control-panel overlay assembly, SK/SL, EN/CS, HU/PL, HR/RO	Q3931-60105	Level 1 (A)
Control-panel overlay assembly, EN/FR, DA/FI, NO/SV	Q3931-60106	Level 1 (A)
Control-panel overlay assembly, RU/TR, EN/EL	Q3931-60107	Level 1 (A)
Control-panel overlay assembly, EN/FR, DE/IT, NL/CA, ES/PT	Q3931-60108	Level 1 (A)
Overlay, control-panel – EN/AR	Q3931-40051	Level 1 (A)
Overlay, control-panel – EN/HE	Q3931-40053	Level 1 (A)
Overlay, control-panel – ID/TH	Q3931-40054	Level 1 (A)
Overlay, control-panel – EN/JA	Q3931-40055	Level 1 (A)
Overlay, control-panel – EN/KO	Q3931-40056	Level 1 (A)
Overlay, control-panel – EN/ZHCN	Q3931-40057	Level 1 (A)
Overlay, control-panel – EN/ZHTW	Q3931-40058	Level 1 (A)
Black print cartridge	CB380-67901	Level 1 (A)
Black image drum	CB384-67901	Level 1 (A)
Magenta print cartridge	CB383-67901	Level 1 (A)
Magenta image drum	CB387-67901	Level 1 (A)
Yellow print cartridge	CB382-67901	Level 1 (A)
Yellow image drum	CB386-67901	Level 1 (A)
Cyan print cartridge	CB381-67901	Level 1 (A)
Cyan image drum	CB385-67901	Level 1 (A)
Formatter (exchange)	Q7539-69001	Level 1 (A)
Formatter (new)	Q7539-67901	Level 1 (A)
Hard-drive kit with service document	Q3931-67901	Level 1 (A)
Memory kit, 128 MB, with service document	Q3931-67902	Level 1 (A)
Memory kit, 256 MB, with service document	Q3931-67903	Level 1 (A)

www.drukparts.pl

Memory kit, 512 MB, with service document	Q3931-67904	Level 1 (A)
Face down cover	Q3931-67905	Level 1 (A)
VOC filter	RC1-9313-000CN	Level 1 (A)
Intermediate transfer belt assy (Image transfer kit)	RMI-3307-000CN	Level 1 (A)
Second transfer roller assy (Roller kit)	RMI-3319-000CN	Level 1 (A)
110 Volt fusing assy kit	Q3931-67914	Level 1 (A)
220 Volt fusing assy kit	Q3931-67915	Level 1 (A)
Tray 2	Q3931-67918	Level 1 (A)
Tray 3, 4, or 5	Q3931-67923	Level 1 (A)
Tray 3, 4, or 5 pickup (1) feed roller (2) kit	Q3931-67919	Level 1 (A)
Tray 1 pickup (1), retard roller (1) kit	Q3931-67920	Level 2 (B)
Duplex switchback tray	Q3931-67921	Level 1 (A)
Security-lock adapter kit	Q3931-67925	Level 1 (A)

NOTE: Only highlighted parts are orderable.

Service documentation

Description	Part number	Self-repair level
Manual-service, EN CLJ CP6015	Q3931-90938	
Service/support CD	Q3931-60118	

Part numbers

Ordering information and availability might change during the life of the product.

Accessories

Item	Description	Part number
HP Color LaserJet 1 x 500 Paper Feeder	500-sheet paper feeder and cabinet	CB473A
HP Color LaserJet 3 x 500 Paper Feeder	3-drawer (500 sheets each) paper feeder and cabinet	CB474A
HP 3-bin Stapler/Stacker Accessory	3-bin stapler/stacker with output accessory bridge unit	Q6998A
HP 3-bin Stapler/Stacker or HP Booklet Maker/Finisher staple cartridge (upper cartridge on HP Booklet Maker/Finisher)	5000-staple replacement cartridge	C8091A C8091-67901 (Order this part number.)

www.drukparts.pl

Item	Description	Part number
HP Booklet Maker/Finisher Accessory	Booklet maker finisher with output accessory bridge unit	Q6999A
HP Booklet Maker/Finisher saddle-stitch staple cartridge (lower cartridge)	2000-staple replacement cartridge	CC383A CC383-67901 (Order this part number.)

Print cartridges

Item	Description	Part number
HP Color LaserJet black print cartridge	21,000-page black cartridge	CB380A
HP Color LaserJet cyan print cartridge	16,500-page cyan cartridge	CB381A
HP Color LaserJet yellow print cartridge	16,500-page yellow cartridge	CB382A
HP Color LaserJet magenta print cartridge	16,500-page magenta cartridge	CB383A

Image drums

Item	Description	Part number
HP Color LaserJet black image drum		CB384A
HP Color LaserJet cyan image drum		CB385A
HP Color LaserJet yellow image drum		CB386A
HP Color LaserJet magenta image drum		CB387A

Maintenance kits

Item	Description	Part number
Image fuser kit	110 volt	CB457A
Image fuser kit	220 volt	CB458A
Roller kit		CB459A
Image transfer kit		CB463A

Memory

Item	Description	Part number
200-pin DDR memory DIMM (dual inline memory module) Boosts the ability of the product to handle large or complex print jobs.	128 MB	Q7557A
	256 MB	Q7558A
	512 MB	Q7559A

www.drukparts.pl

Cables and interfaces

Item	Description	Part number
Enhanced I/O (EIO) card	HP Jetdirect 635n IPv6/IPsec Print Server	J7961G
USB cable	2-meter standard USB-compatible device connector	C6518A

www.drukparts.pl

Printer

Printer unit

Figure 9-1 Printer-unit major assemblies (1 of 2)

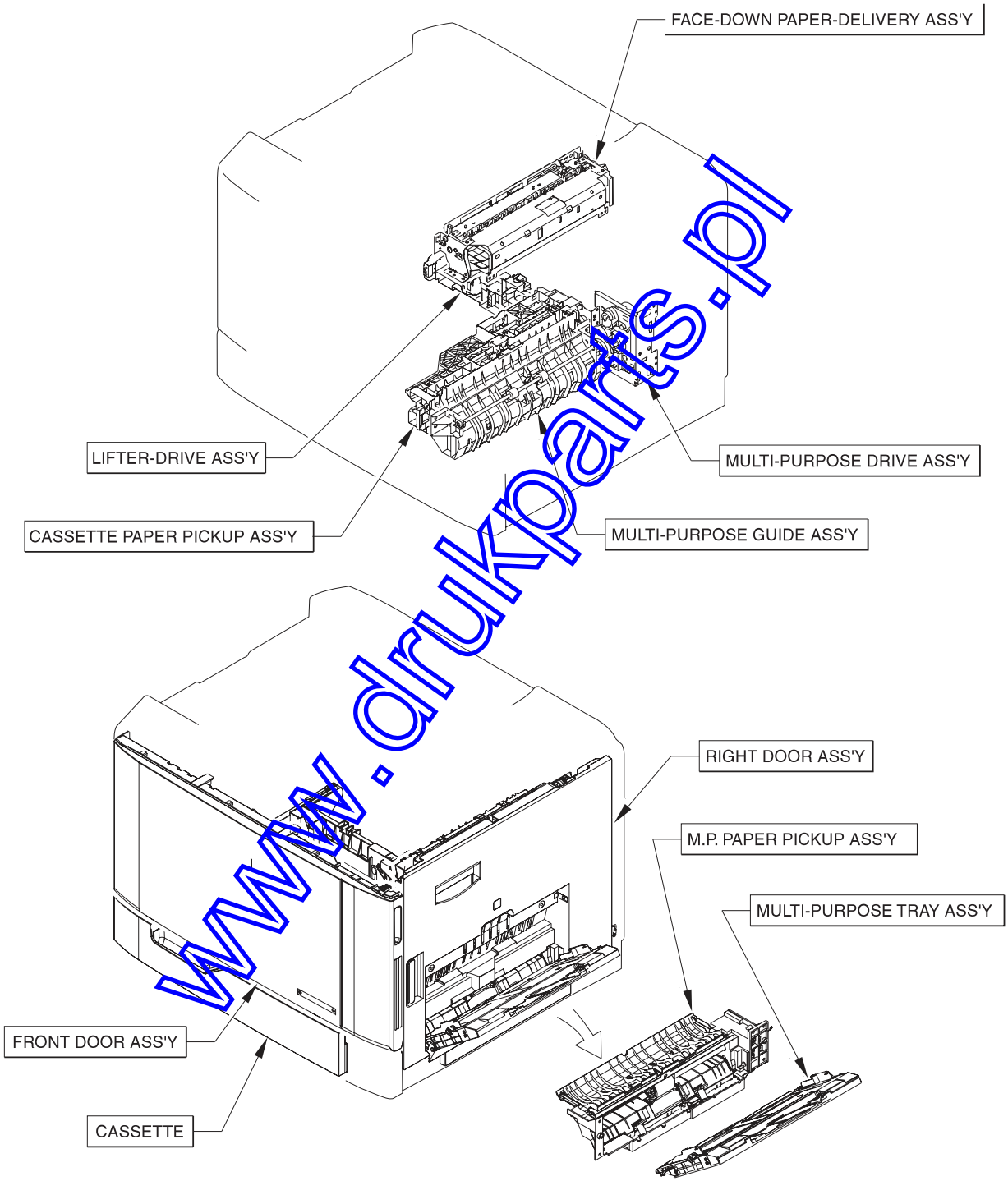

www.drukparts.pl

Figure 9-2 Printer-unit major assemblies (2 of 2)

DUPLEX MODEL

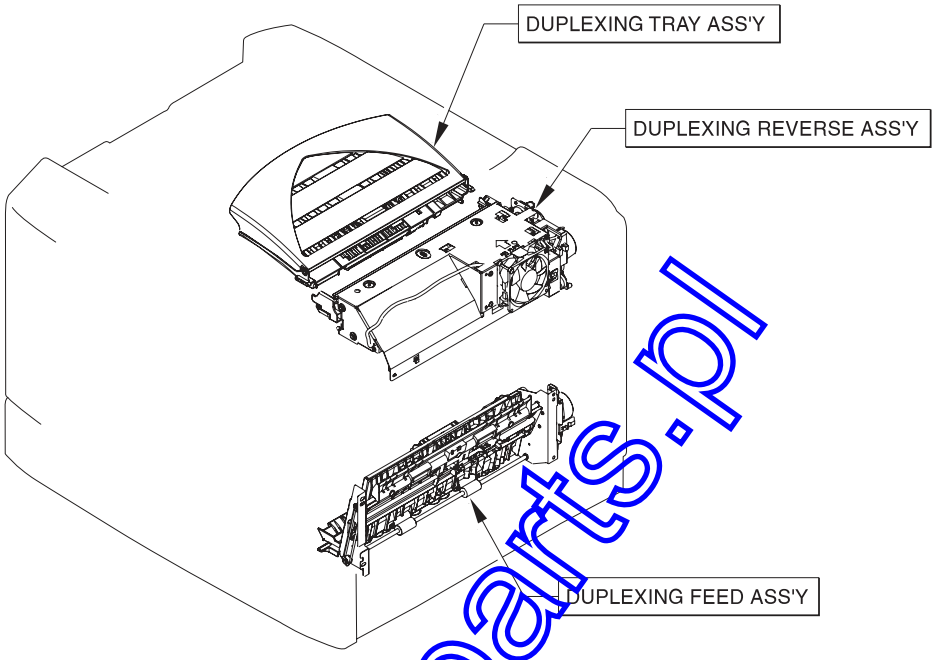

www.drukparts.pl

Printer parts

Figure 9-3 Printer external covers and panels

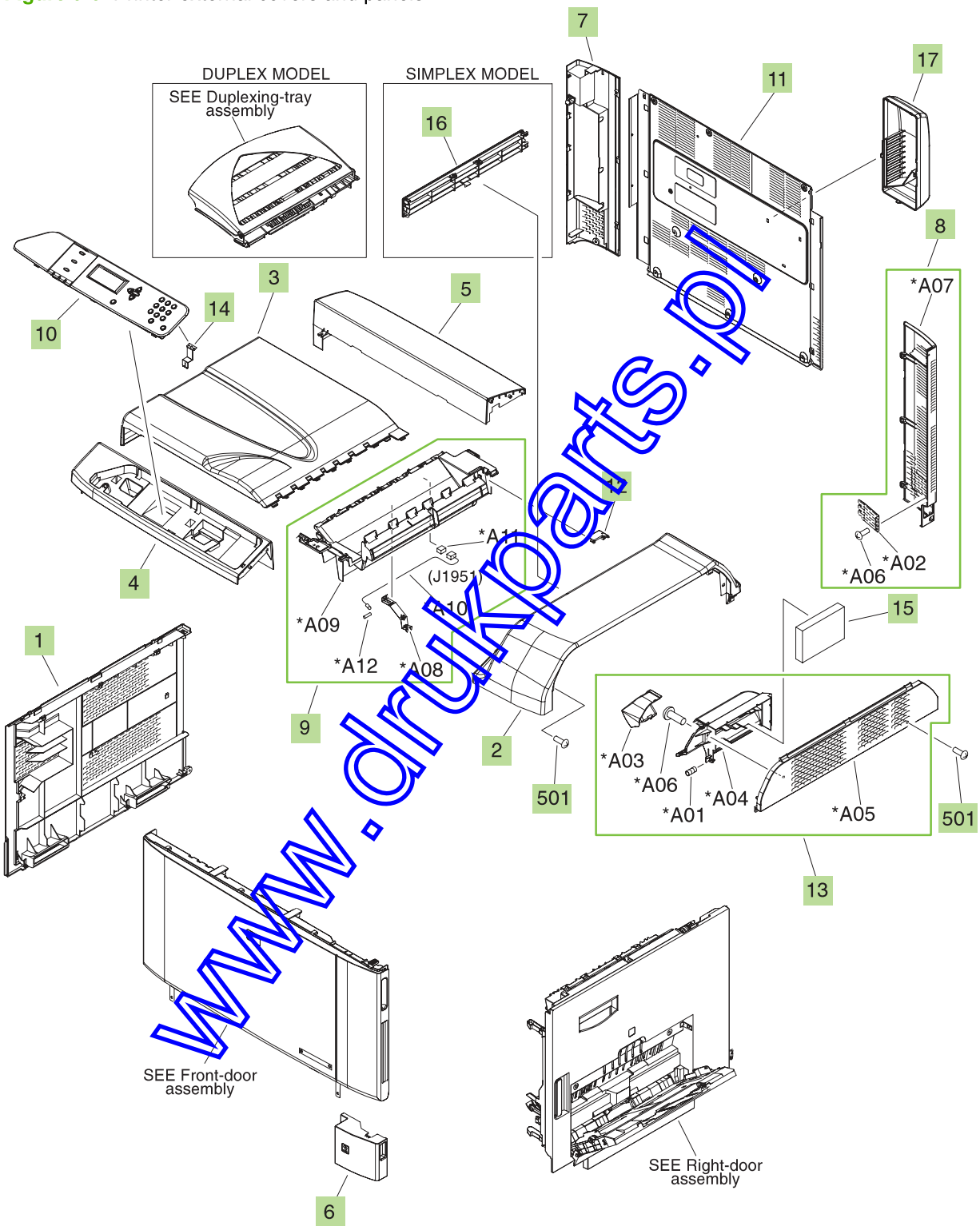

www.drukparts.pl

Table 9-1 Printer external covers and panels

Ref	Description	Part number	Qty
1	Cover, left	RC1-9336-000CN	1
2	Cover, right-upper	RC1-9339-000CN	1
3	Cover, face-down	Q3931-67905	1
4	Cover, panel	RC1-9341-000CN	1
5	Cover, rear-upper	RC1-9342-000CN	1
6	Right-lower cover assembly	RL1-1280-000CN	1
7	Cover, rear-left	RC1-9344-000CN	1
8	Rear-right cover assembly	RM1-4415-000CN	1
9	Face-down end-tray assembly	RM1-3340-000CN	1
10	Control-panel unit	RM1-4516-000CN	1
11	Cover, rear	RL1-1210-000CN	1
12	Cover, face-down drive	RC1-9360-000CN	1
13	Switchback-cover assembly	RM1-3360-000CN	1
14	Plate, control-panel grounding	RC1-9238-000CN	1
15	Filter unit, air	RC1-9313-000CN	1
16	Cover, blanking (simplex)	RC1-9362-000CN	1
17	Fixing-fan cover assembly	RM1-5950-000CN	1
501	Screw, tapping, truss-head, M4X10	XB4-7401-005CN	8 (simplex)
501	Screw, tapping, truss-head, M4X10	XB4-7401-005CN	12 (duplex)

NOTE: Only highlighted parts are orderable.

www.drukparts.pl

Figure 9-4 Printer front-door assembly

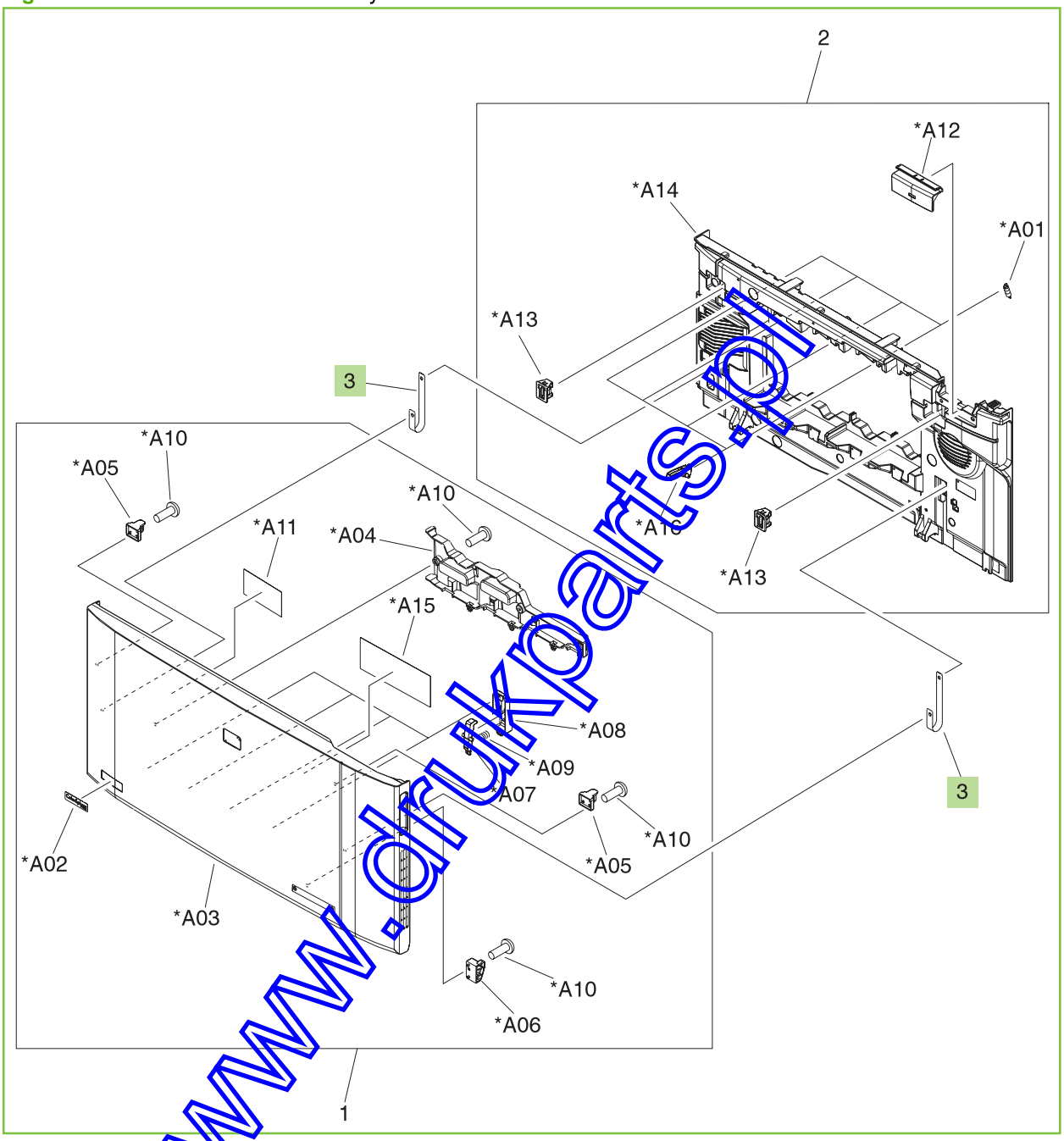

www.drukparts.ru

Table 9-2 Printer front-door assembly

Ref	Description	Part number	Qty
All	Front-door assembly	RM1-3356-000CN	1
3	Band, door	RC1-9043-000CN	2

NOTE: Only highlighted parts are orderable.

www.drukparts.pl

Figure 9-5 Printer right-door assembly

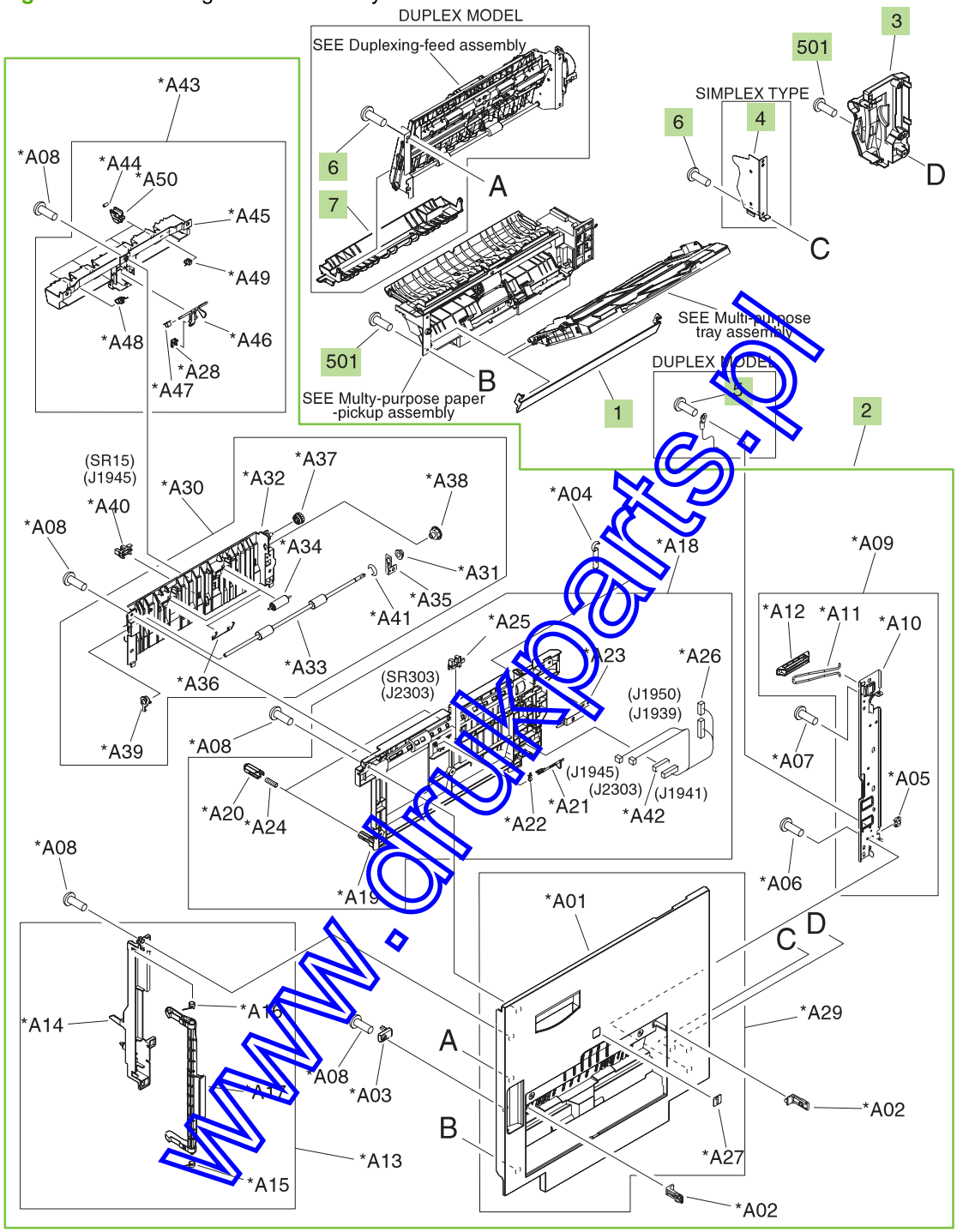

www.drkparts.pl

Table 9-3 Printer right-door assembly

Ref	Description	Part number	Qty
1	Cover, multi-purpose blanking	RC1-8527-000CN	1
2	Right-door sub-assembly	RM1-3333-000CN	1
3	Cover, motor	RC1-9511-000CN	1
4	Support, door-cover (simplex)	RC1-9014-000CN	1
5	Screw, RS, M3X6 (duplex)	XA9-1495-000CN	1
6	Screw, with washer, M4X12	XA9-1422-000CN	2 (simplex)
6	Screw, with washer, M4X12	XA9-1422-000CN	4 (duplex)
7	Guide, duplexing-feed, upper (duplex)	RL1-1335-000CN	1
501	Screw, tapping, truss-head, M4X10	XB4-7401-005CN	7

NOTE: Only highlighted parts are orderable.

www.drukparts.pl

Figure 9-6 Printer internal components (1 of 7)

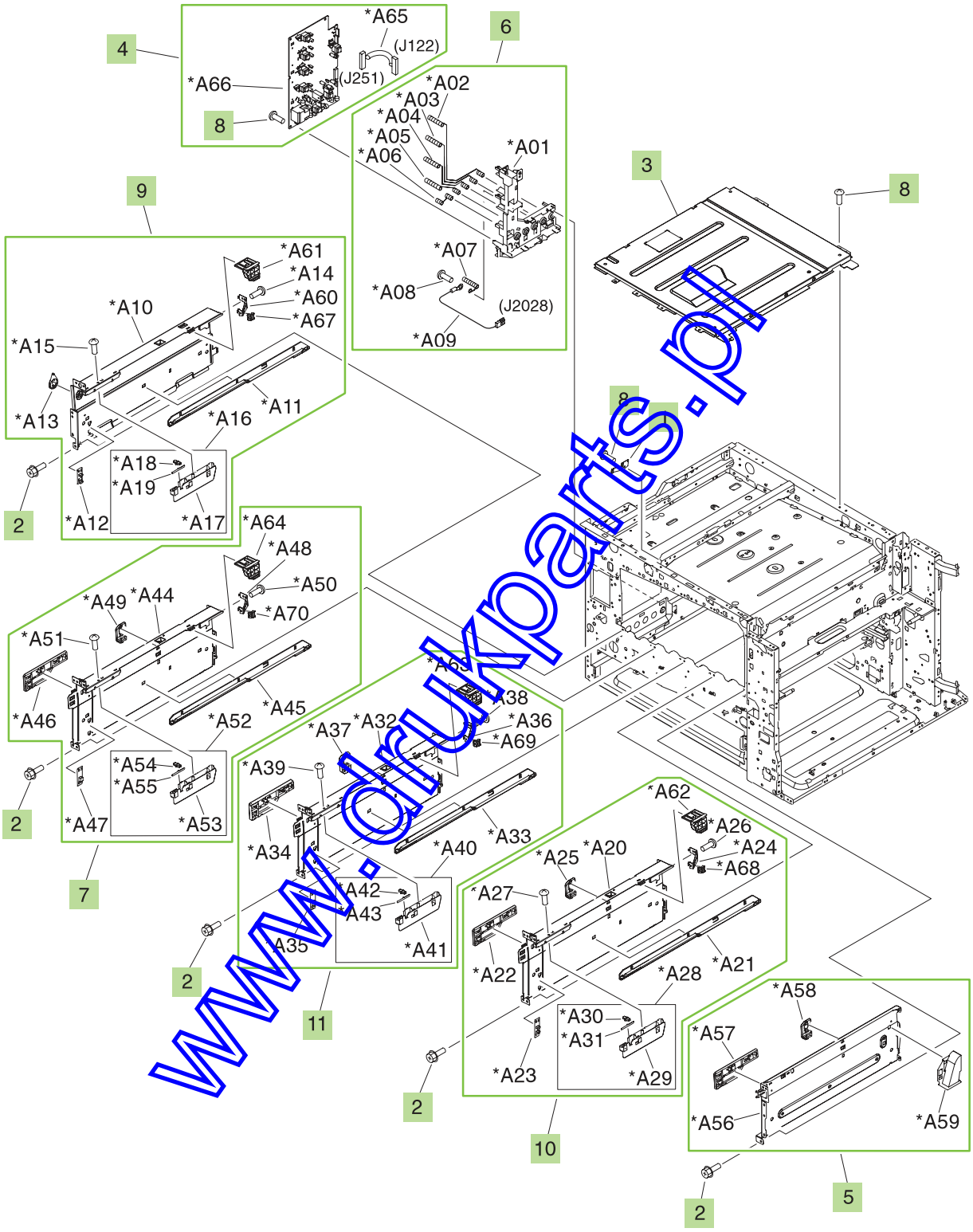

www.drukparts.pl

Table 9-4 Printer internal components (1 of 7)

Ref	Description	Part number	Qty
1	Spring, leaf	RC1-9233-000CN	1
2	Screw, RS, M3x8	XA9-1504-000CN	5
3	Top-cover assembly	RL1-1284-000CN	1
4	High-voltage transfer B PCA assembly	RM1-5475-000CN	1
5	Right-side wall assembly	RM1-3239-000CN	1
6	Transfer contact-holder assembly	RM1-3230-000CN	1
7	Partition-plate assembly, cyan	RM1-3238-000CN	1
8	Screw, RS, M3x6	XA9-1495-000CN	10
9	Left-side wall assembly	RM1-3233-000CN	1
10	Partition-plate assembly, yellow	RM1-3235-000CN	1
11	Partition-plate assembly, magenta	RM1-3237-000CN	1

NOTE: Only highlighted parts are orderable.

www.drukparts.pl

Figure 9-7 Printer internal components (2 of 7)

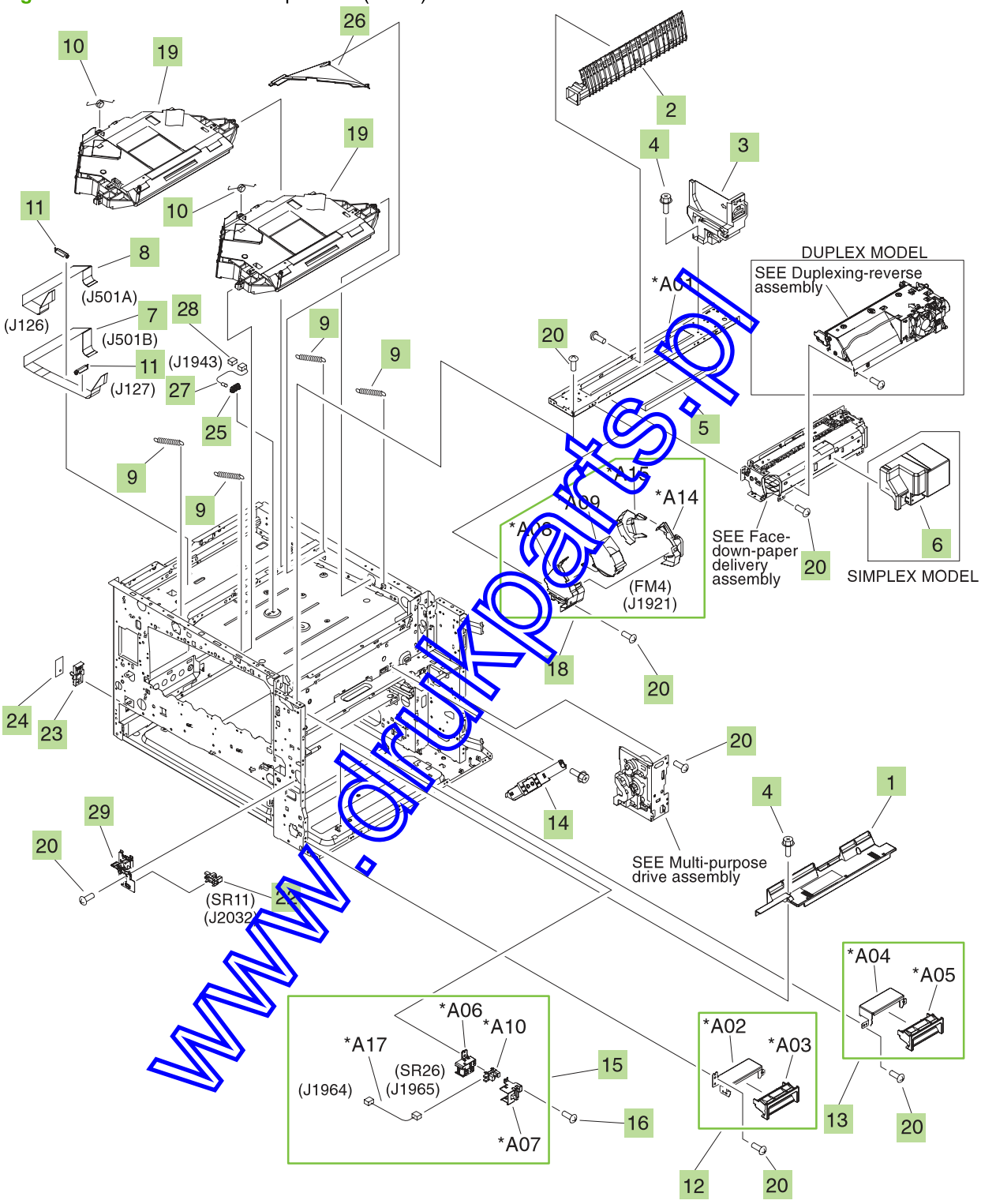

www.drukparts.pl

Table 9-5 Printer internal components (2 of 7)

Ref	Description	Part number	Qty
1	Guide, multi-purpose, right	RL1-1283-000CN	1
2	Guide, face-down inner	RC1-8959-000CN	1
3	Rail, reverse, rear	RC1-9206-000CN	1
4	Screw, RS, M3x8	XA9-1504-000CN	10
5	Sheet, fixing-crossmember	RC1-9232-000CN	1
6	Block, reinforcement (simplex)	RC1-9354-000CN	1
7	Cable, laser flexible flat	RK2-1354-000CN	1
8	Cable, laser flexible flat	RK2-1355-000CN	1
9	Spring, tension	RU5-2822-000CN	4
10	Spring, torsion	RU5-2825-000CN	2
11	Clamp, FFC	WF2-5812-000CN	2
12	Grip-support front assembly	RM1-3225-000CN	1
13	Grip-support rear assembly	RM1-3226-000CN	1
14	Thermopile case assembly	RM1-3232-000CN	1
15	Photosensor assembly	RM1-3250-000CN	1
16	Screw, RS, M3x8	XA9-1449-000CN	2
18	Fan assembly	RM1-3364-000CN	1
19	Scanner assembly kit (1 scanner assembly per kit) with service document	Q3931-67907	2
20	Screw, RS, M3x6	XA9-1495-000CN	20
22	Photo interrupter, TLP1243	WG8-5696-000CN	1
23	Holder, environment-sensor	RC1-9324-000CN	1
24	Sensor unit, humidity	RK2-2376-000CN	1
25	Holder, scanner-thermistor	RC1-9260-000CN	1
26	Duct, scanner	RC1-9334-000CN	1
27	Thermistor unit	RK2-1363-000CN	1
28	Connector, snap-fight	VS1-7177-002CN	1
29	Interlock switch assembly	RM1-3589-000CN	1

www.drukparts.pl

NOTE: Only highlighted parts are orderable.

Figure 9-8 Printer internal components (3 of 7)

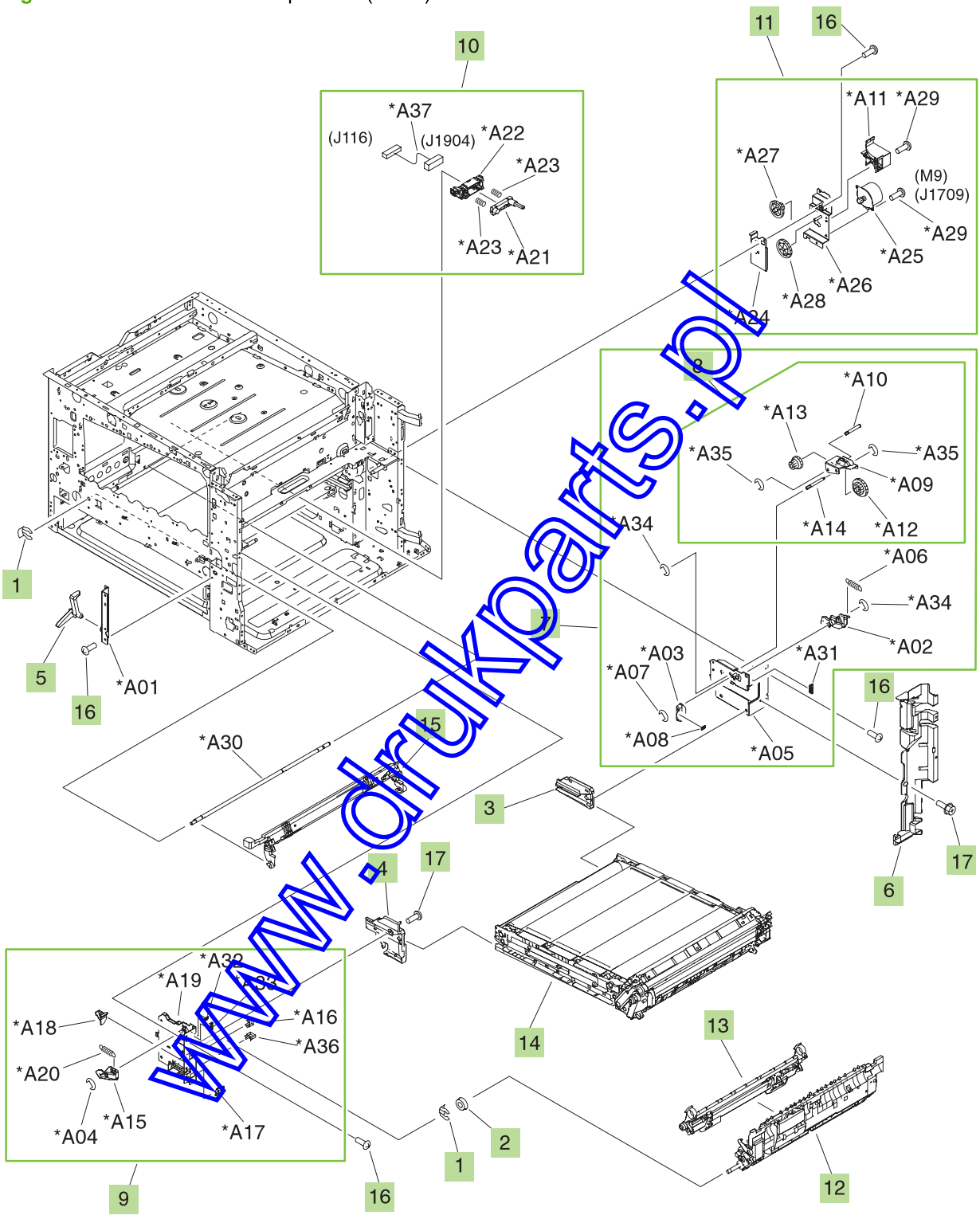

www.drukparts.pl

Table 9-6 Printer internal components (3 of 7)

Ref	Description	Part number	Qty
1	Retainer	RC1-8511-000CN	2
2	Bushing	RC1-8734-000CN	1
3	Guide, intermediate transfer belt (ITB)-entrance, rear	RC1-9186-000CN	1
4	Guide, intermediate transfer belt (ITB)-entrance, front	RC1-9185-000CN	1
5	Arm, 1st-estrangement	RC1-9189-000CN	1
6	Cover, internal, right	RC1-9348-000CN	1
7	Intermediate transfer belt (ITB) lock-support rear assembly	RM1-3215-000CN	1
9	Intermediate transfer belt (ITB) lock-support front assembly	RM1-3228-000CN	1
10	Intermediate transfer belt (ITB)-drawer assembly	RM1-3240-000CN	1
11	Intermediate transfer belt (ITB) estrangement-drive assembly	RM1-3280-000CN	1
12	Registration 2nd-transfer assembly kit with service document	Q1931-67909	1
13	2nd-transfer-roller assembly	RM1-3319-000CN	1
14	Intermediate transfer belt (ITB) assembly	RM1-3307-000CN	1
15	Color-plane-registration sensor assembly	RM1-3258-000CN	1
16	Screw, RS, M3x6	XA9-1495-000CN	10
17	Screw, RS, M3x8	XA9-1504-000CN	1

NOTE: Only highlighted parts are orderable.

www.drukparts.pl

Figure 9-9 Printer internal components (4 of 7)

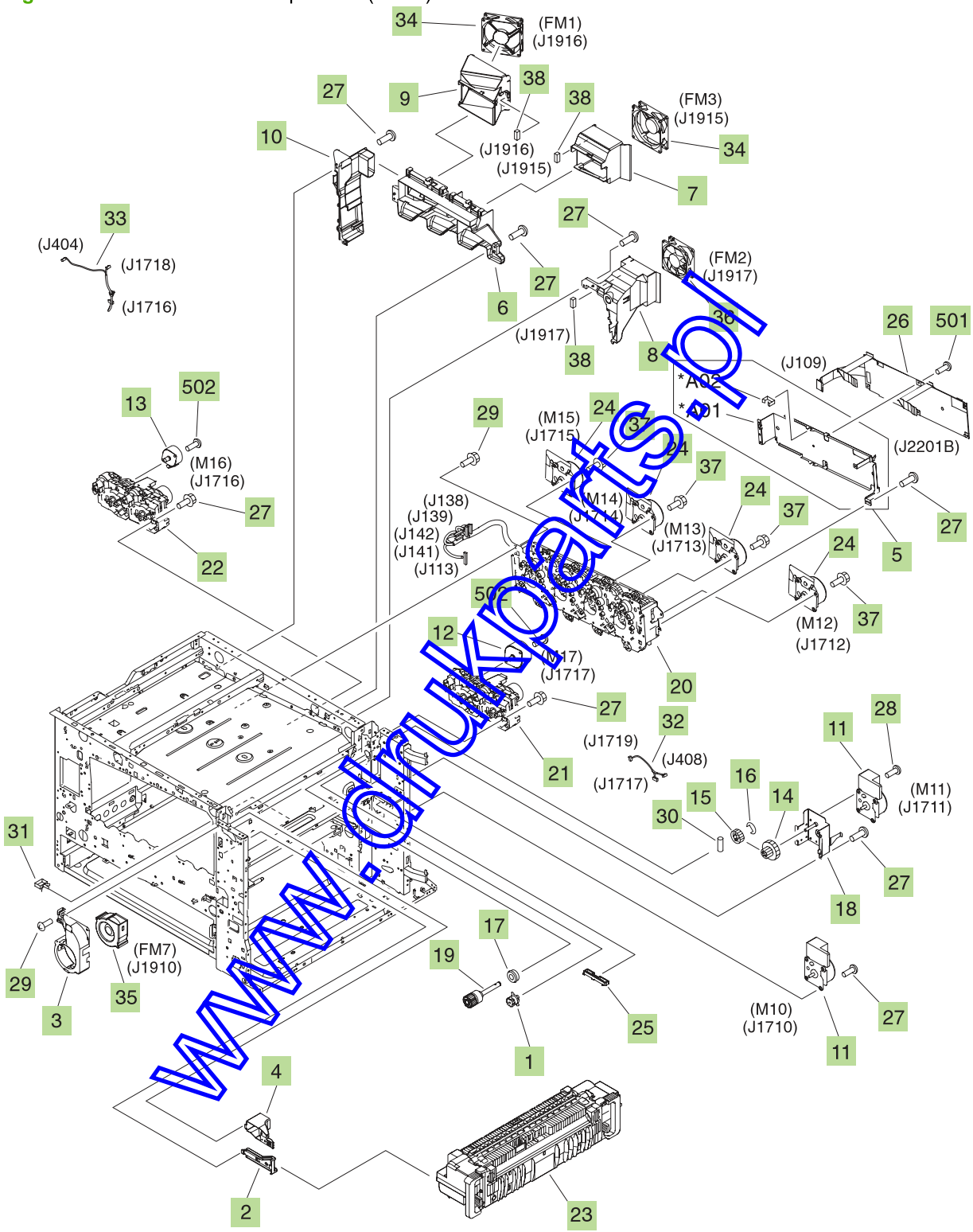

www.drukparts.pl

Table 9-7 Printer internal components (4 of 7)

Ref	Description	Part number	Qty
1	Damper, gear	RC1-8925-000CN	1
2	Rail, fixing, front	RC1-8931-000CN	1
3	Duct, air	RC1-8961-000CN	1
4	Duct, face-down joint	RC1-8964-000CN	1
5	Tag PCA-holder assembly	RM1-4402-000CN	1
6	Duct, cartridge	RC1-9276-000CN	1
7	Holder, cartridge-fan	RC1-9277-000CN	1
8	Holder, fixing-fan	RC1-9278-000CN	1
9	Holder, scanner-fan	RC1-9279-000CN	1
10	Duct, scanner-fan	RC1-9309-000CN	1
11	DC motor assembly	RM1-4519-000CN	2
12	Motor, stepping, DC	RK2-1366-000CN	1
13	Motor, stepping, DC	RK2-1370-000CN	1
14	Gear, 83T/25T	RU5-0790-000CN	1
15	Gear, 34T	RU5-0791-000CN	1
16	Ring, E	XD9-0234-000CN	1
17	Bearing, ball	XG9-0586-000CN	1
18	Plate, fixing-motor	RL1-1216-000CN	1
19	Fixing one-way gear assembly	RM1-3247-000CN	1
20	Main drive-unit kit with service document	Q3931-67911	1
21	Toner cartridge drive assembly kit with service document	Q3931-67912	1
22	Toner cartridge drive assembly kit with service document	Q3931-67913	1
23	Fixing assembly kit, 110-127V	Q3931-67914	1
24	Fixing assembly kit, 220-240V	Q3931-67915	1
24	Drum-motor assembly	RM1-3286-000CN	4
25	Rail, fixing, rear	RC1-8939-000CN	1
26	Memory-tag PCA assembly	RM1-3585-000CN	1
27, 28	Screw, RS, M3X6	XA9-1495-000CN	14
29	Screw, RC, M3x8	XA9-1504-000CN	10
30	Pin, dowel	XD9-0240-000CN	1
31	Saddle, wire	WT2-5694-000CN	17
32	Toner-motor cable	RM1-3383-000CN	1
33	Toner-motor cable	RM1-3385-000CN	1
34	Fan	RK2-1377-000CN	2

www.drukparts.pl

Table 9-7 Printer internal components (4 of 7) (continued)

Ref	Description	Part number	Qty
35	Fan	RK2-1382-000CN	1
36	Fan	RK2-1378-000CN	1
37	Screw, TP, M3x6	XA9-1159-000CN	16
38	Connector, snap-tight	VS1-7177-003CN	3
501	Screw, with washer, M3x6	XB2-8300-607CN	5
502	Screw, machined, truss-head, M3x4	XB1-2300-407CN	4

NOTE: Only highlighted parts are orderable.

www.drukparts.pl

www.drukparts.pl

Figure 9-10 Printer internal components (5 of 7)

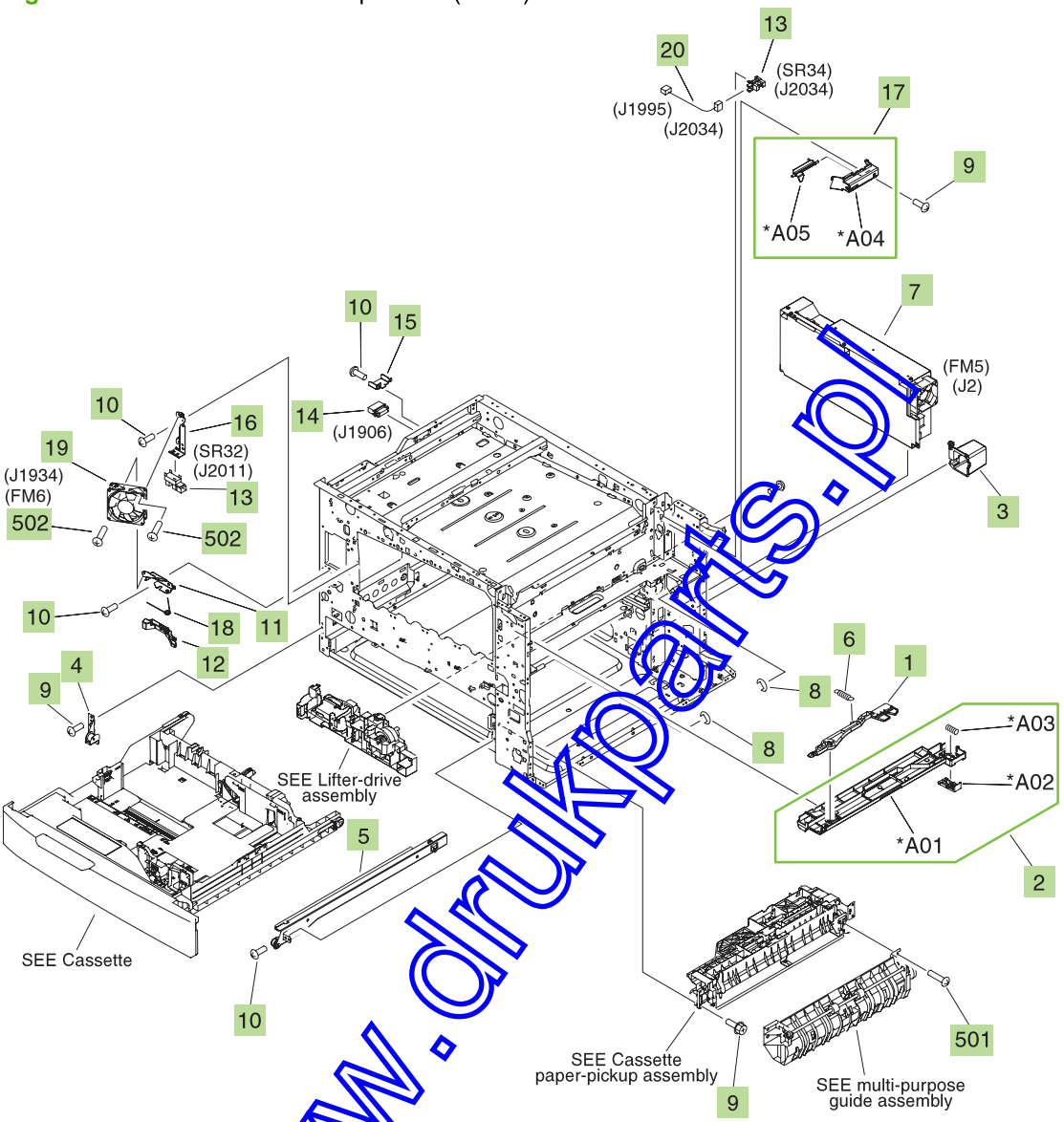

www.drukparts.pl

Table 9-8 Printer internal components (5 of 7)

Ref	Description	Part number	Qty
1	Lever, paper-sensing	RC1-8928-000CN	1
2	Intermediate transfer belt (ITB) duct assembly	RM1-4401-000CN	1
3	Cover, cassette back-end	RC1-9201-000CN	1
4	Rail, left, top	RL1-1213-000CN	1
5	Rail, cassette, right	RL1-1215-000CN	1
6	Spring, tension	RU5-2796-000CN	1
7	Low-voltage power-supply assembly	RM1-3594-000CN	1
8	Ring, E	XD9-0234-000CN	2
9	Screw, RS, M3x8	XA9-1504-000CN	10
10	Screw, RS, M3x6	XA9-1495-000CN	10
11	Plate, fan-fixing, front	RC1-9190-000CN	1
12	Lever, door-interlock shutter	RC1-9220-000CN	1
13	Photo interrupter, TLP1243	WG8-5696-000CN	2
14	Connector, drawer	VS1-7258-000CN	1
15	Plate, drawer-guard	RC1-9235-000CN	1
16	Plate, sensor, front	RC1-9246-000CN	1
17	Guide-sensor assembly	RM1-4400-000CN	1
18	Spring, torsion	RC1-9244-000CN	1
19	Fan	RK2-1378-000CN	1
20	Cable, fixing open-sensor	RM1-5029-000CN	1
501	Screw, tapping, truss-head, M4x10	XB4-7401-005CN	4
502	Screw, TP, M3x30	XB6-7303-005CN	2

NOTE: Only highlighted parts are orderable.

www.drukparts.pl

Figure 9-11 Printer internal components (6 of 7)

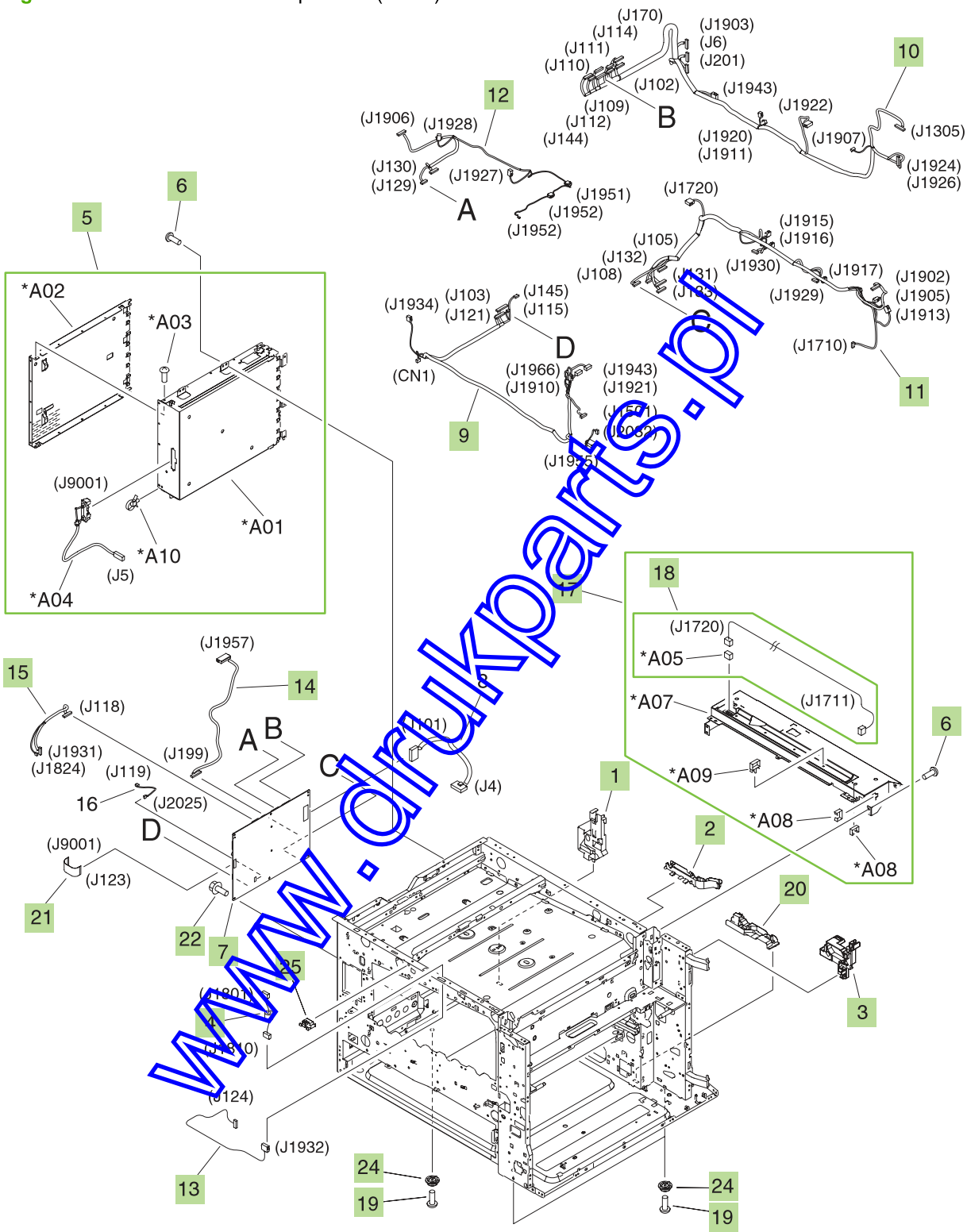

www.drukparts.pl

Table 9-9 Printer internal components (6 of 7)

Ref	Description	Part number	Qty
1	Guide, cable, C	RC1-9308-000CN	1
2	Guide, cable, D	RC1-9312-000CN	1
3	Guide, cable, E	RC1-9318-000CN	1
4	Panel cable	RM1-3389-000CN	1
5	Formatter-case assembly	RM1-3253-000CN	1
6	Screw, RS, M3x6	XA9-1495-000CN	20
7	DC-controller kit with service document	Q3931-67946	1
8	DC-controller power cable	RM1-3610-000CN	1
9	Front cable	RM1-3617-000CN	1
10	Rear-lower cable	RM1-3618-000CN	1
11	Rear-upper cable	RM1-3619-000CN	1
12	Scanner-joint cable	RM1-3620-000CN	1
13	Panel-joint cable	RM1-3622-000CN	1
14	Interface-joint cable	RM1-3623-000CN	1
15	Color-plane-registration joint cable	RM1-3624-000CN	1
17	Rear-cover-mount plate assembly	RM1-3354-000CN	1
18	Fixing-motor cable	RM1-3217-000CN	1
19	Screw, TP, M4x8	XA9-1300-000CN	3
20	Guide, cable, B	RC1-9307-000CN	1
21	Cable, flexible flat	RK2-1356-000CN	1
22	Screw, RS, M3x8	XA9-1449-000CN	8
24	Foot, rubber	RC1-9208-000CN	3
25	Guide, cable	RC1-9329-000CN	1

NOTE: Only highlighted parts are orderable.

www.drukparts.pl

Figure 9-12 Printer internal components (7 of 7)

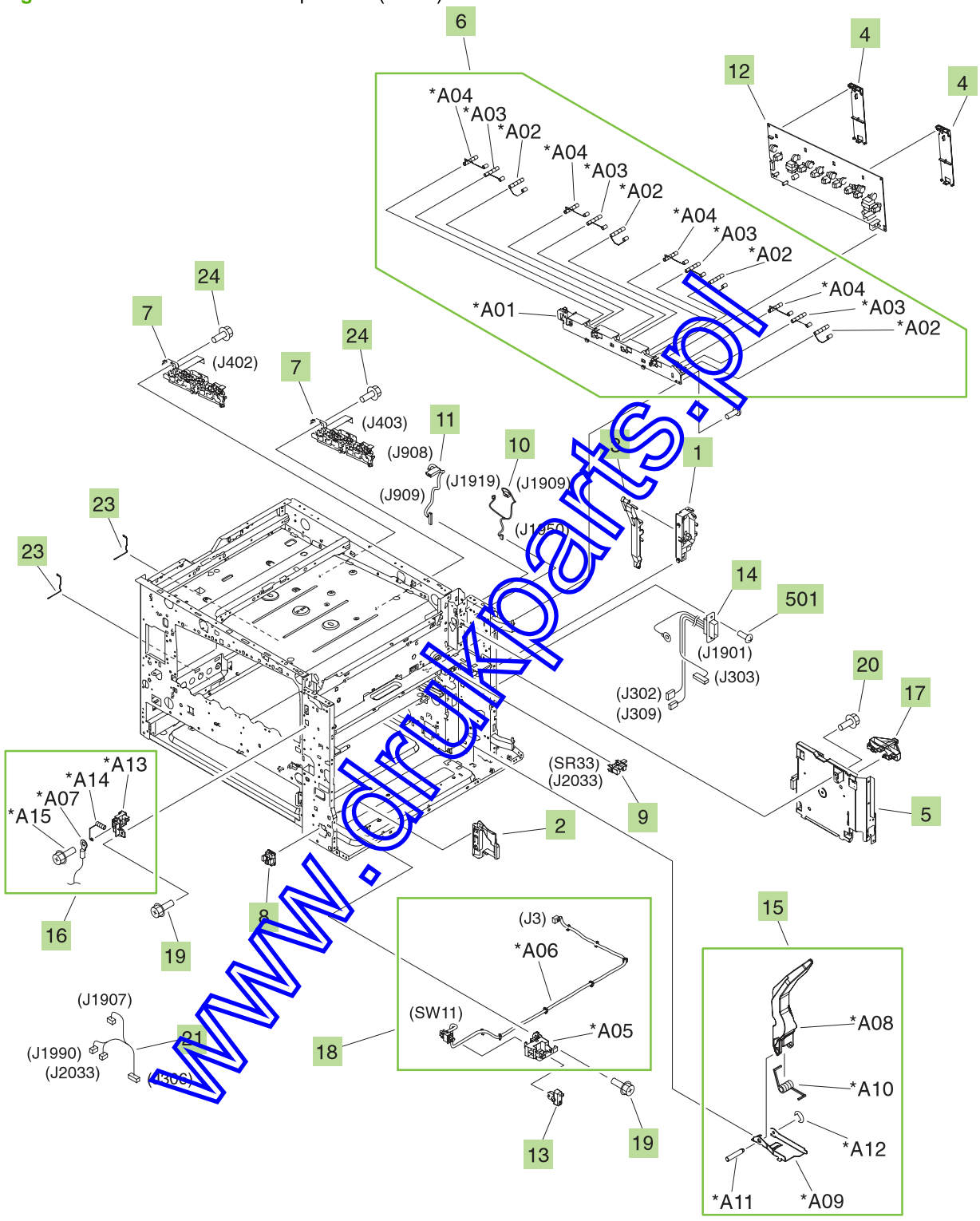

www.drukparts.pl

Table 9-10 Printer internal components (7 of 7)

Ref	Description	Part number	Qty
1	Guide, cable, A	RC1-9306-000CN	1
2	Cover, main-switch	RC1-9211-000CN	1
3	Guide, cable, F	RC1-9323-000CN	1
4	Plate, HVT-A (high-voltage transmission) guard	RC1-9326-000CN	2
5	Fixing power-supply assembly	RM1-3218-000CN	1
6	Cartridge contact-holder assembly	RM1-3254-000CN	1
7	Cartridge-interface assembly kit with service document	Q3931-67947	1
8	Holder, high-voltage-connector	RC1-9328-000CN	1
9	Photo interrupter, TLP1243	WG8-5696-000CN	1
10	Face-down unit-1 cable	RM1-3390-000CN	1
11	Face-down unit-2 cable	RM1-3391-000CN	1
12	High-voltage-transfer A PCA assembly	RM1-3582-000CN	1
13	Button, main-switch	RC1-9300-000CN	1
14	Fixing-joint cable	RM1-3612-000CN	1
15	T2 guide-arm assembly	RM1-4411-000CN	1
16	Fixing-bias cable assembly	RM1-4409-000CN	1
17	Guide, fixing-cable	RC1-9332-000CN	1
18	Main switch-holder assembly	RM1-3252-000CN	1
19	Screw, RS, M3x8	XA9-1504-000CN	47
20	Screw, RS, M3x6	XA9-1495-000CN	54
21	Cable TP/T2 open-sensor	RM1-5030-000CN	1
23	Clamp, formatter cable	RC1-9261-000CN	2
24	Screw, RS, M13x12	XA9-1801-000CN	6
501	Screw, machined, truss-head, M4x8	XB1-2400-805CN	2

NOTE: Only highlighted parts are orderable.

www.drukparts.pl

Figure 9-13 Printer multi-purpose-drive assembly

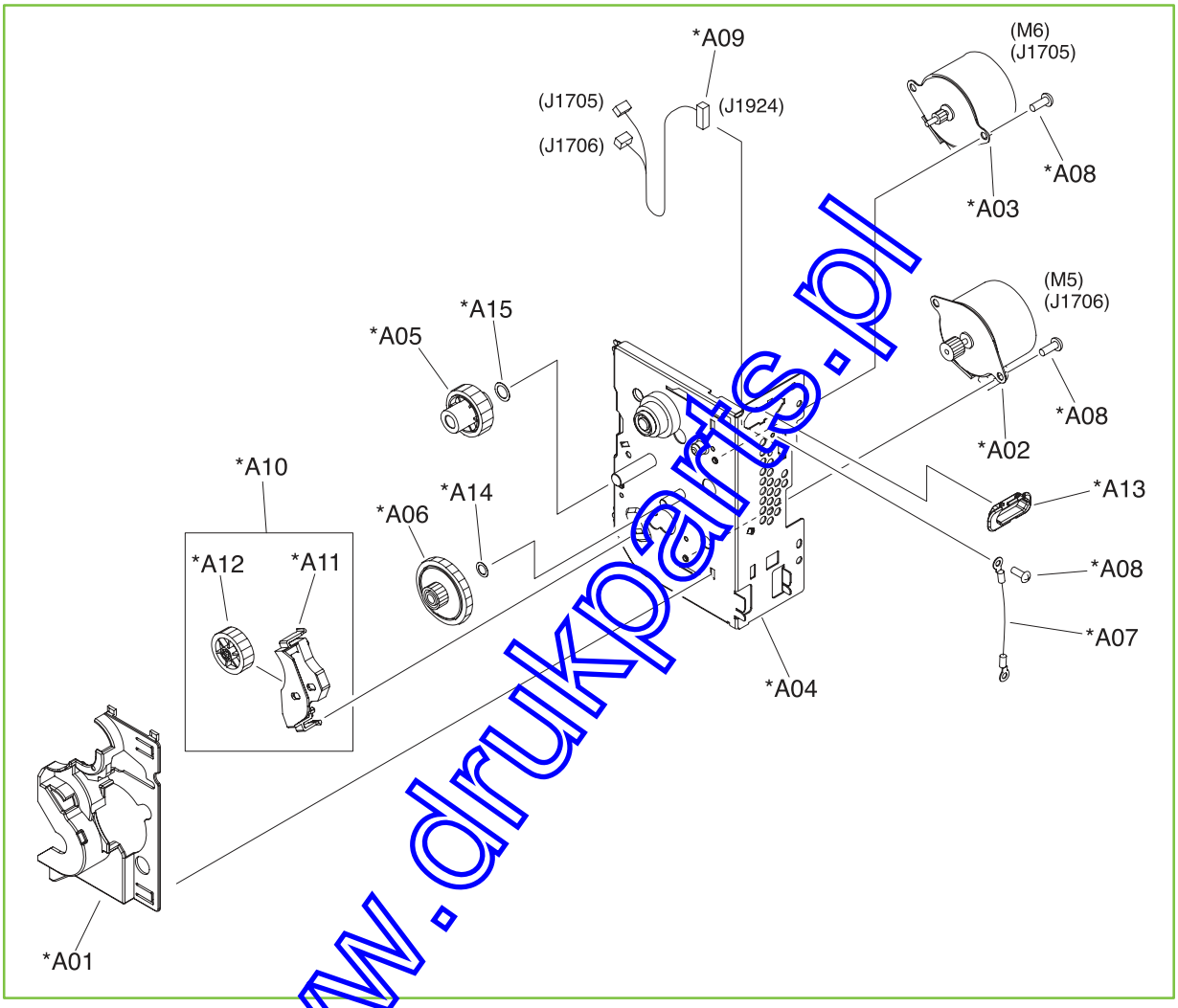

www.drukparts.pl

Table 9-11 Printer multi-purpose-drive assembly

Ref	Description	Part number	Qty
All	Multi-purpose-drive assembly	RM1-3366-000CN	1

NOTE: Only highlighted parts are orderable.

www.drukparts.pl

Figure 9-14 Printer lifter-drive assembly

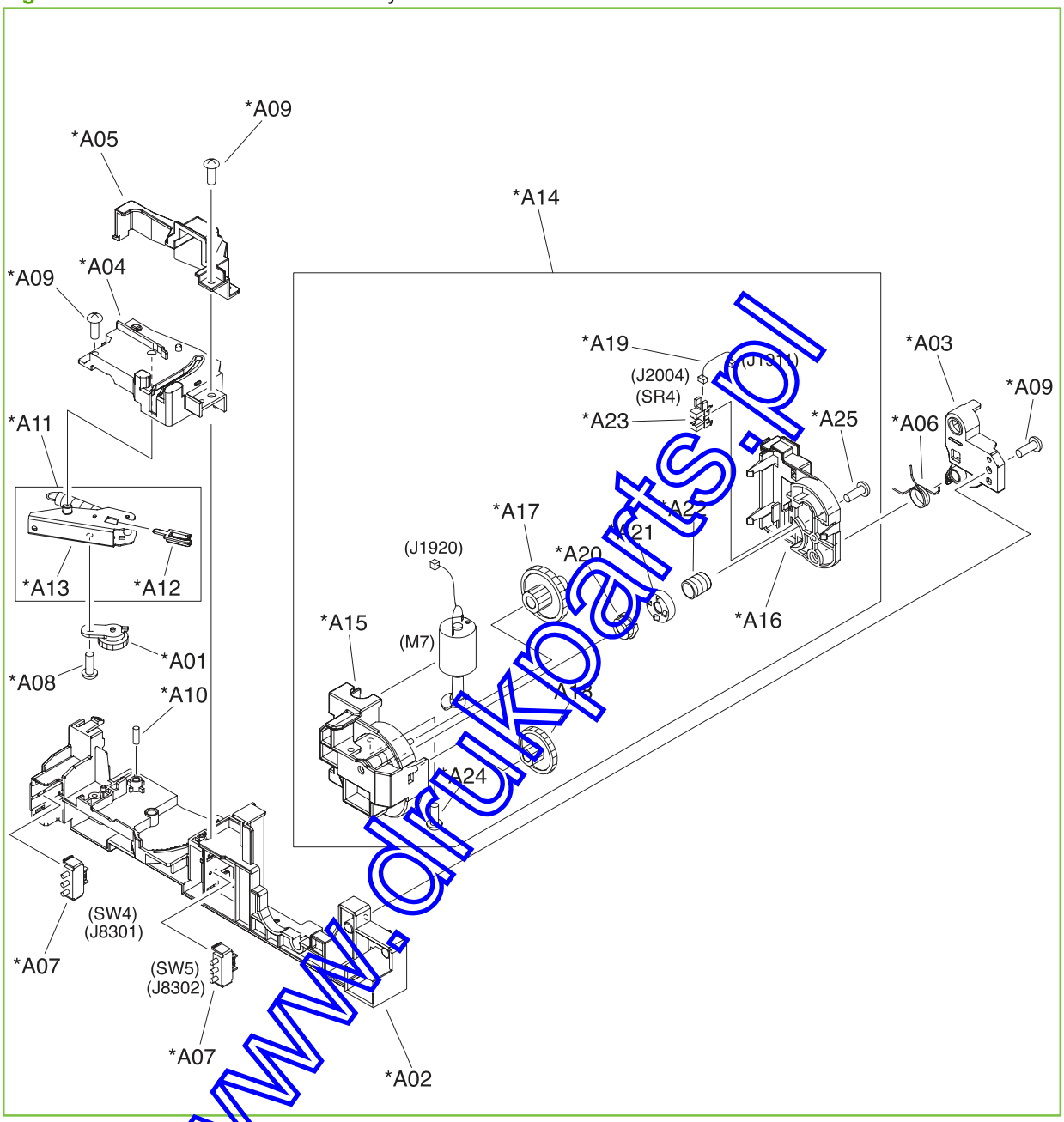

www.drukparts.pl

Table 9-12 Printer lifter-drive assembly

Ref	Description	Part number	Qty
All	Lifter-drive-assembly kit	RM1-3222-020CN	1

NOTE: Only highlighted parts are orderable.

www.drukparts.pl

Figure 9-15 Printer cassette

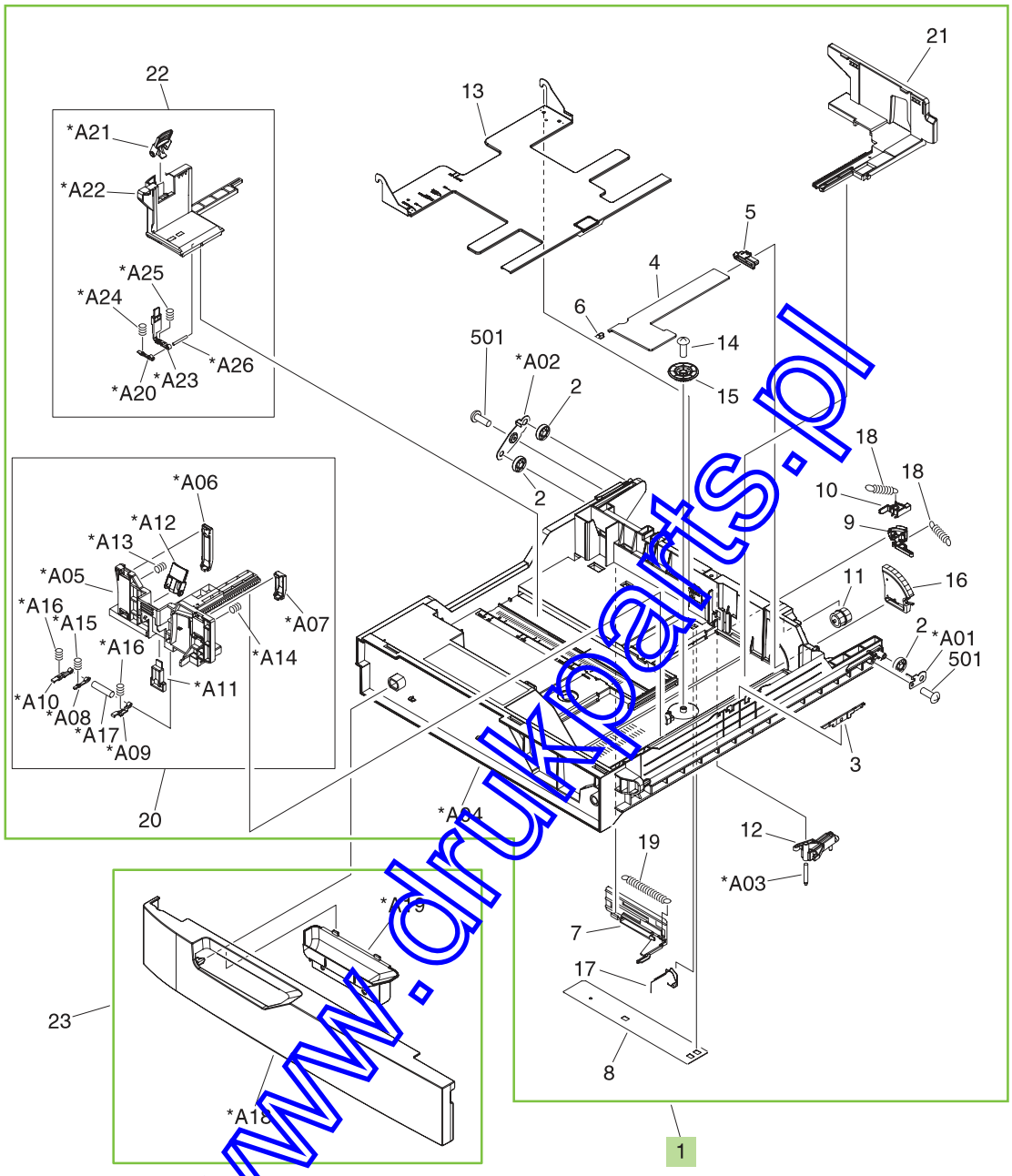

www.drukparts.pl

Table 9-13 Printer cassette

Ref	Description	Part number	Qty
1, 23	Cassette-assembly kit	Q3931-67918	1

NOTE: Only highlighted parts are orderable.

www.drukparts.pl

Figure 9-16 Printer cassette paper-pickup assembly

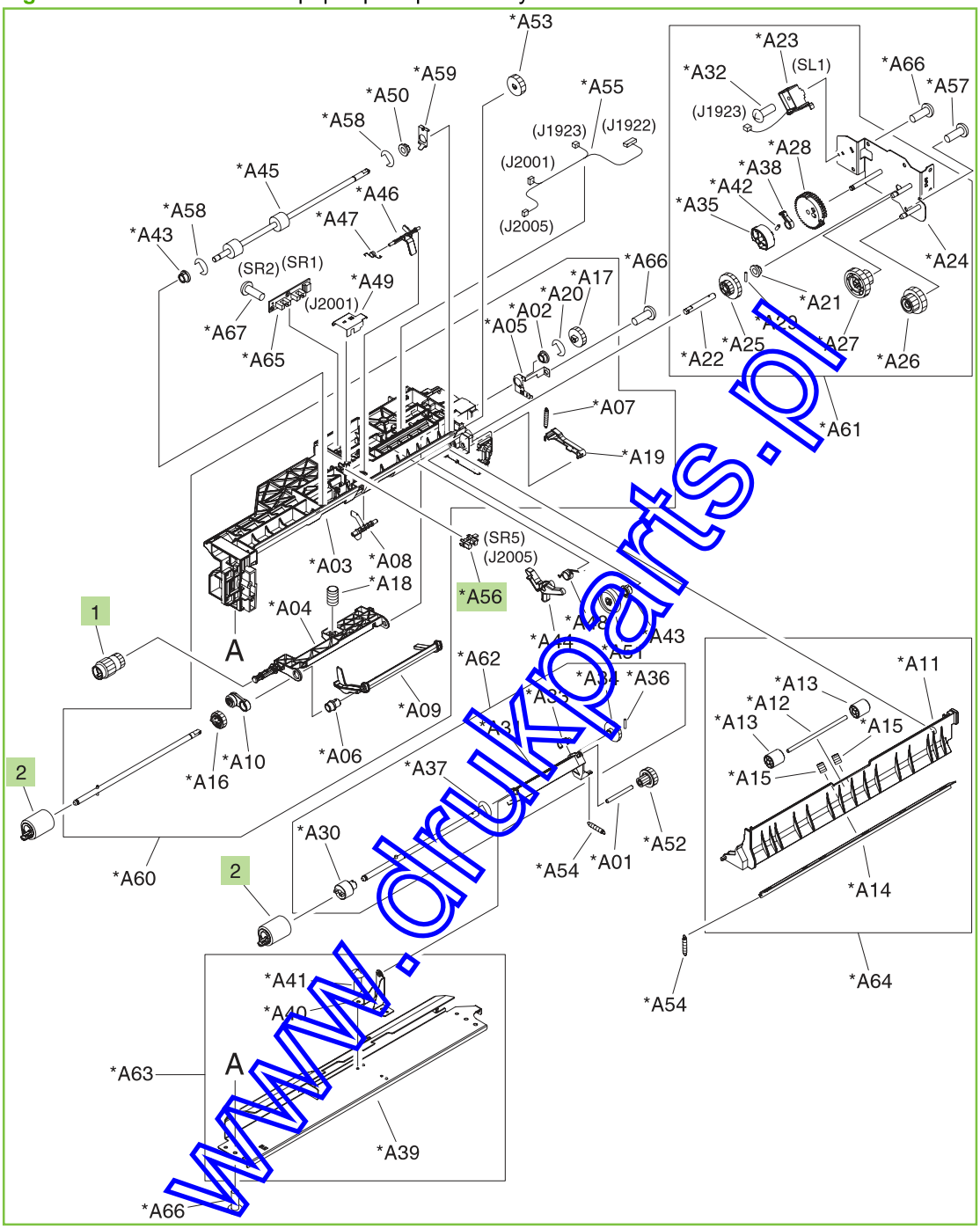

www.drukparts.pl

Table 9-14 Printer cassette paper-pickup assembly

Ref	Description	Part number	Qty
All	Cassette paper-pickup assembly (includes 1 pick and 2 feed rollers)	RM1-3206-000CN	1
1, 2	Tray 2 pickup, feed-roller kit	Q3931-67919	1

NOTE: Only highlighted parts are orderable.

www.drukparts.pl

Figure 9-17 Printer multi-purpose paper-pickup assembly

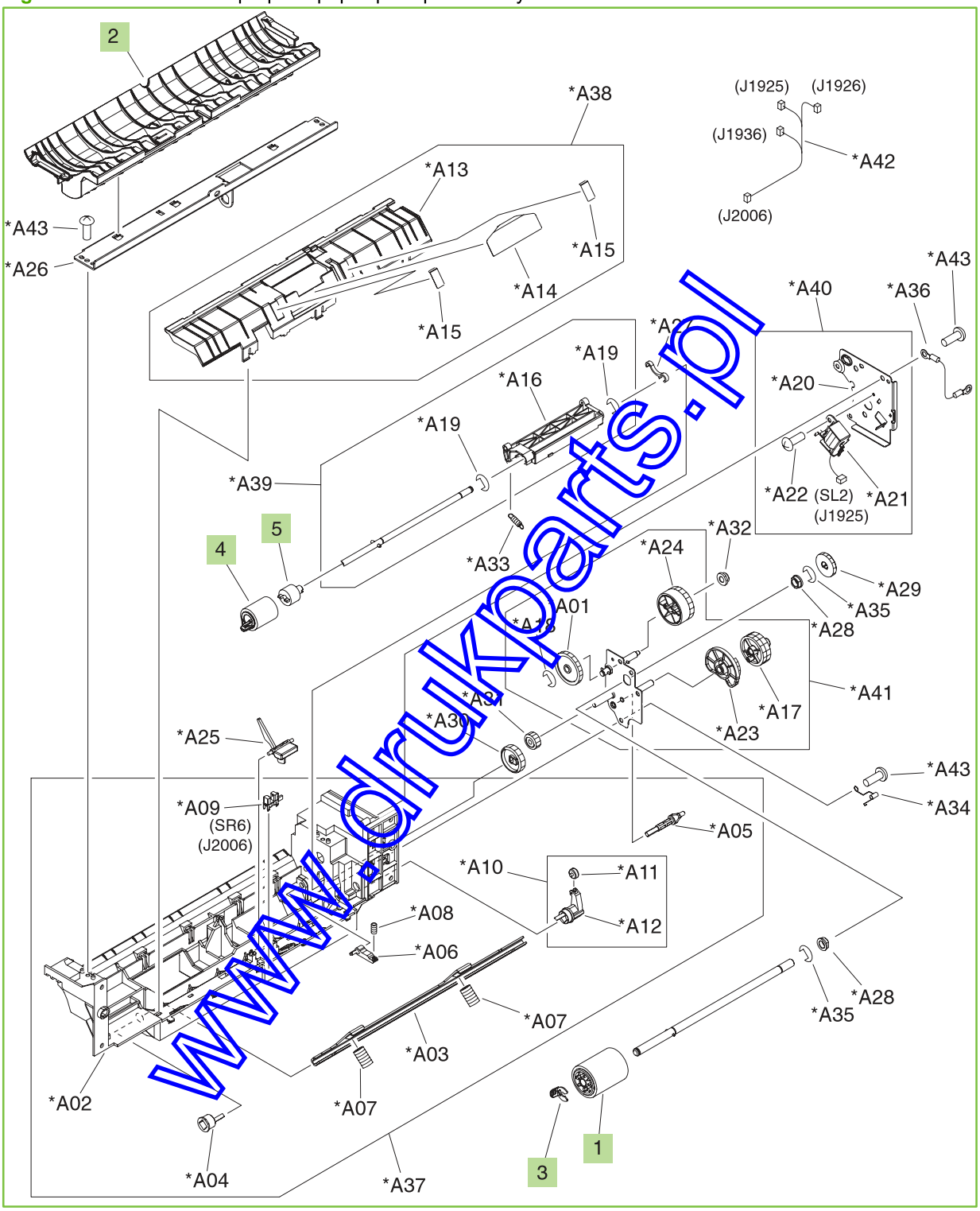

www.drukparts.pl

Table 9-15 Printer multi-purpose paper-pickup assembly

Ref	Description	Part number	Qty
All	Multi-purpose paper-pickup assembly	RM1-3345-000CN	1
1, 4	Tray 1 pickup, retard-roller kit	Q3931-67920	1
2	Guide, multi-purpose, upper	RC1-8526-000CN	1
3	Retainer	RC1-8511-000CN	1
5	Limiter, torque	RC1-8519-000CN	1

NOTE: Only highlighted parts are orderable.

www.drukparts.pl

Figure 9-18 Printer multi-purpose-tray assembly

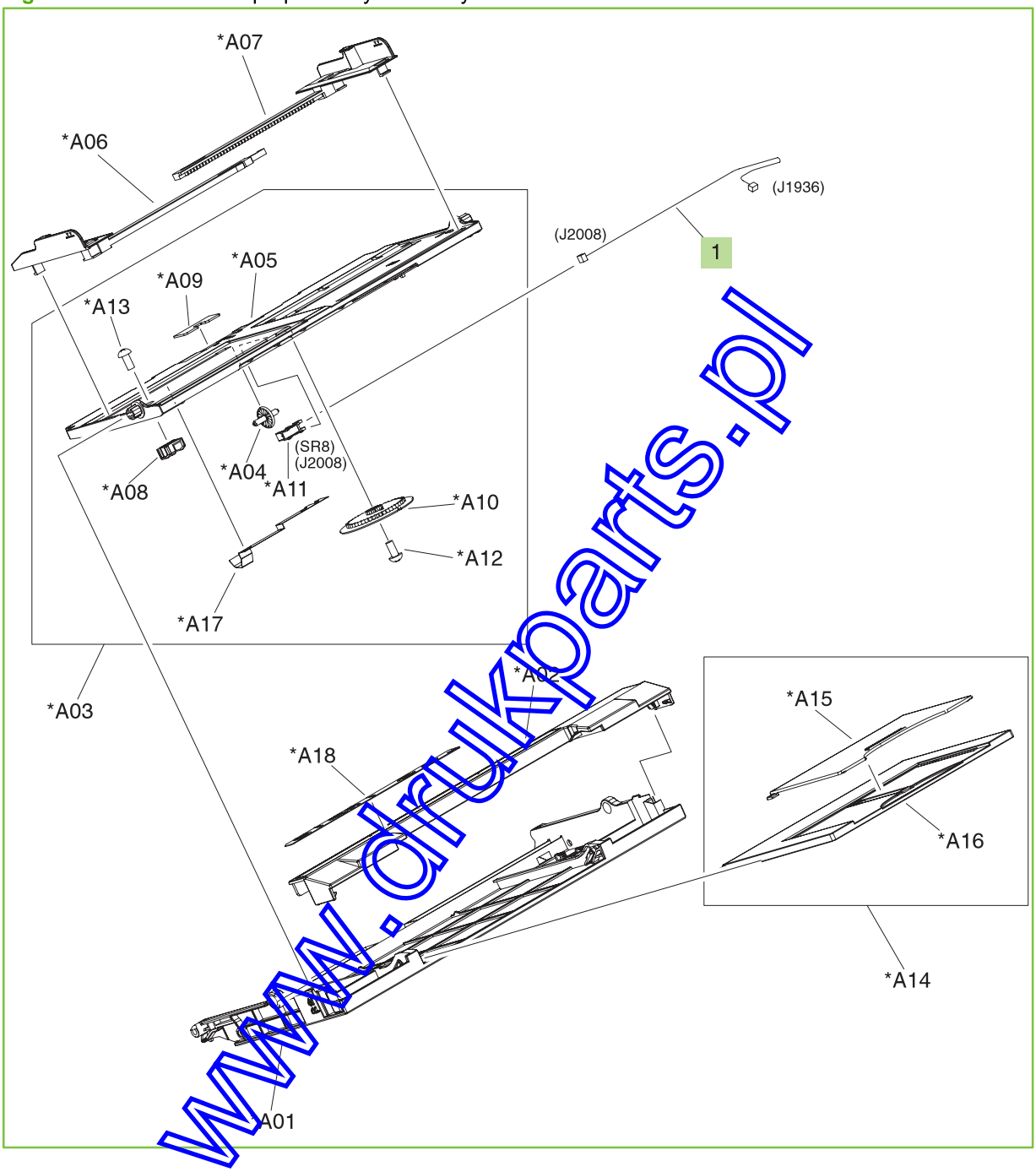

www.drukparts.pl

Table 9-16 Printer multi-purpose-tray assembly

Ref	Description	Part number	Qty
All	Multi-purpose-tray assembly	RM1-3341-000CN	1
1	Multi-tray cable	RM1-3630-000CN	1

NOTE: Only highlighted parts are orderable.

www.drukparts.pl

Figure 9-19 Printer multi-purpose-guide assembly

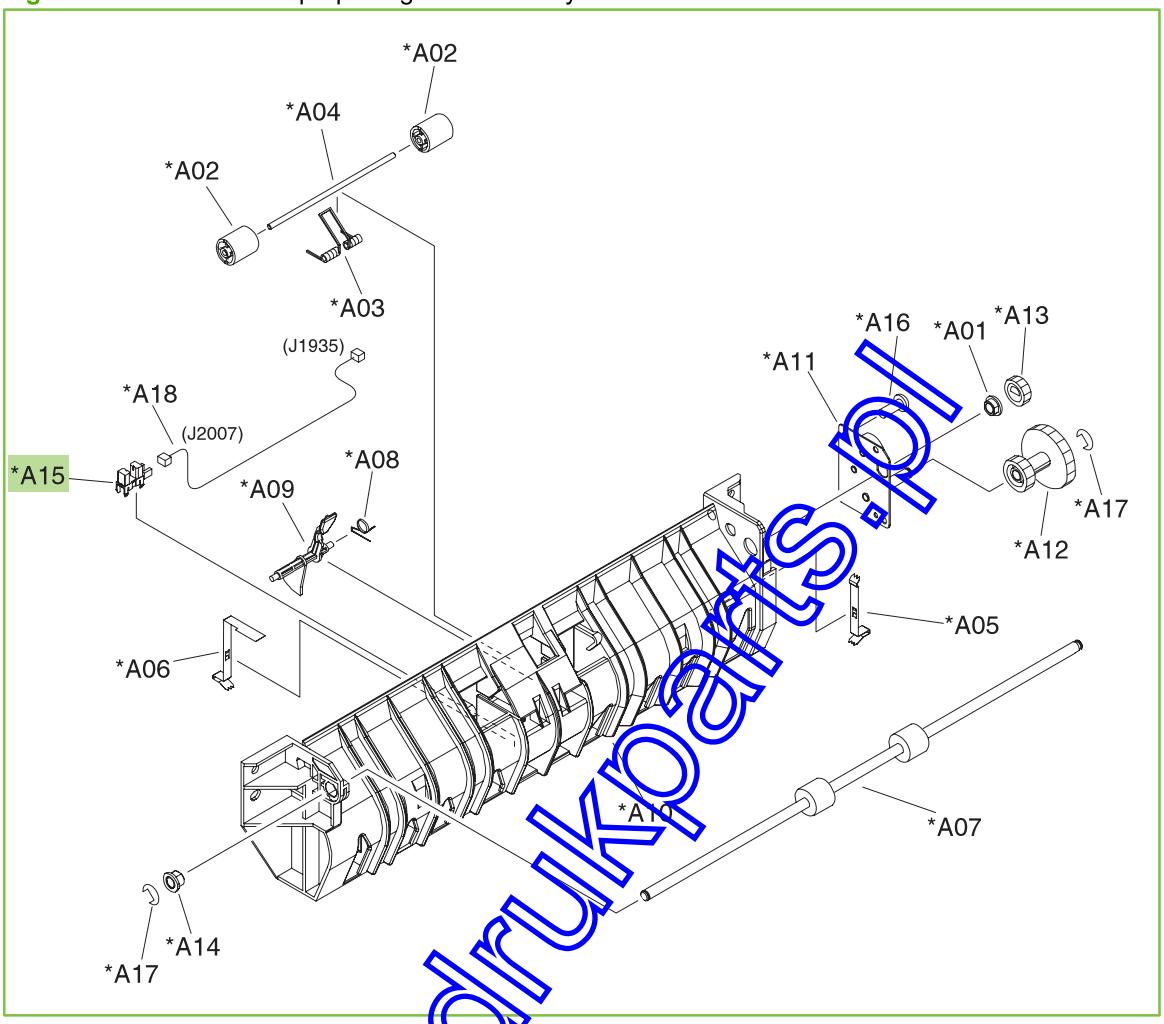

www.drukparts.pl

Table 9-17 Printer multi-purpose-guide assembly

Ref	Description	Part number	Qty
All	Multi-purpose-guide assembly	RM1-3291-000CN	1
A15	Photo interrupter, TLP1243	WG8-5696-000CN	1

NOTE: Only highlighted parts are orderable.

www.drukparts.pl

Figure 9-20 Printer face-down paper-delivery assembly

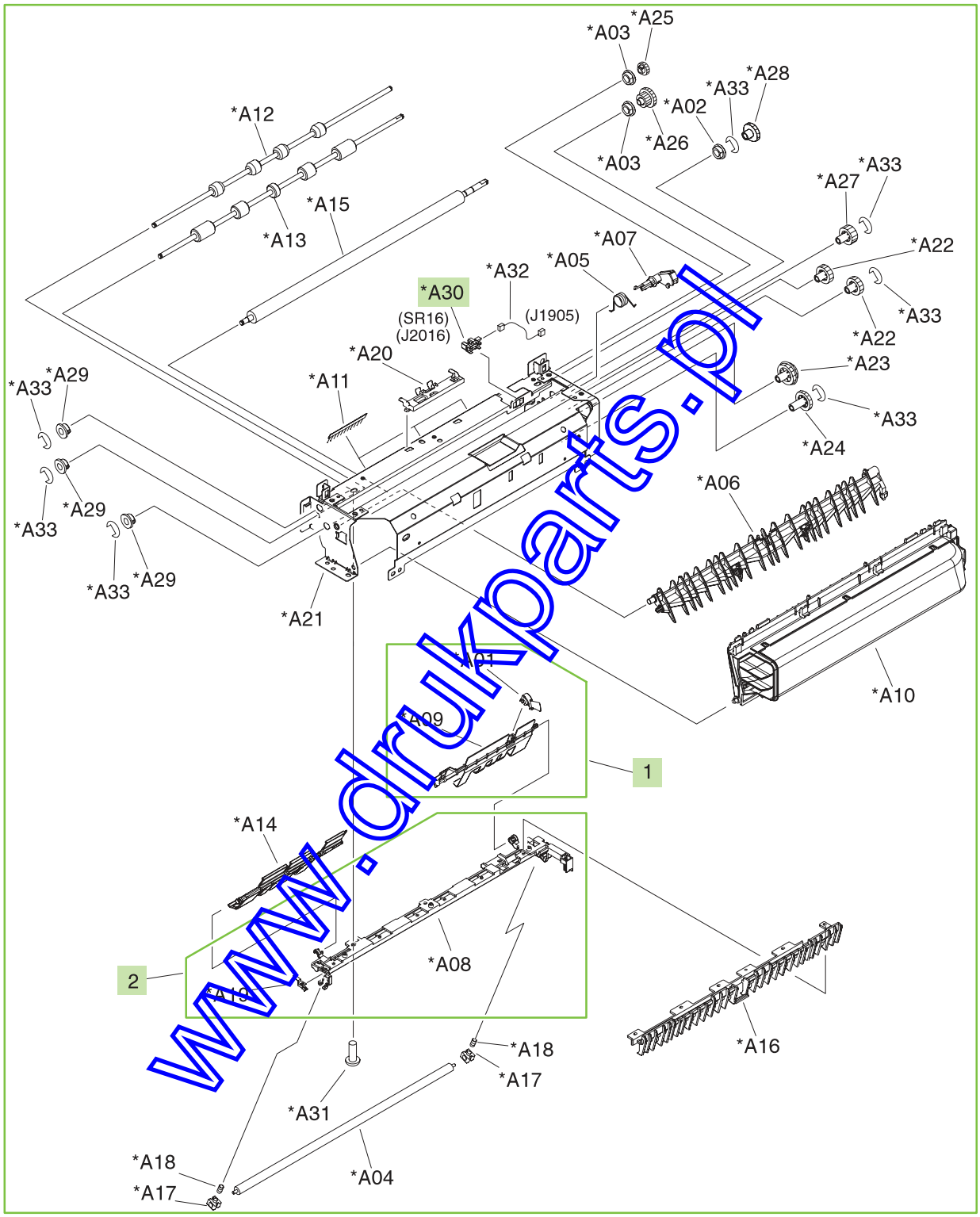

www.drukparts.pl

Table 9-18 Printer face-down paper-delivery assembly

Ref	Description	Part number	Qty
All	Face-down paper-delivery assembly	RM1-3293-000CN	1
1	Face-down full-flag assembly	RM1-4391-000CN	1
2	Paper-delivery-guide assembly	RM1-4407-000CN	1
A30	Photo interrupter, TLP1243	WG8-5696-000CN	1

NOTE: Only highlighted parts are orderable.

www.drukparts.pl

Figure 9-21 Printer duplexing-reverse assembly (duplex model)

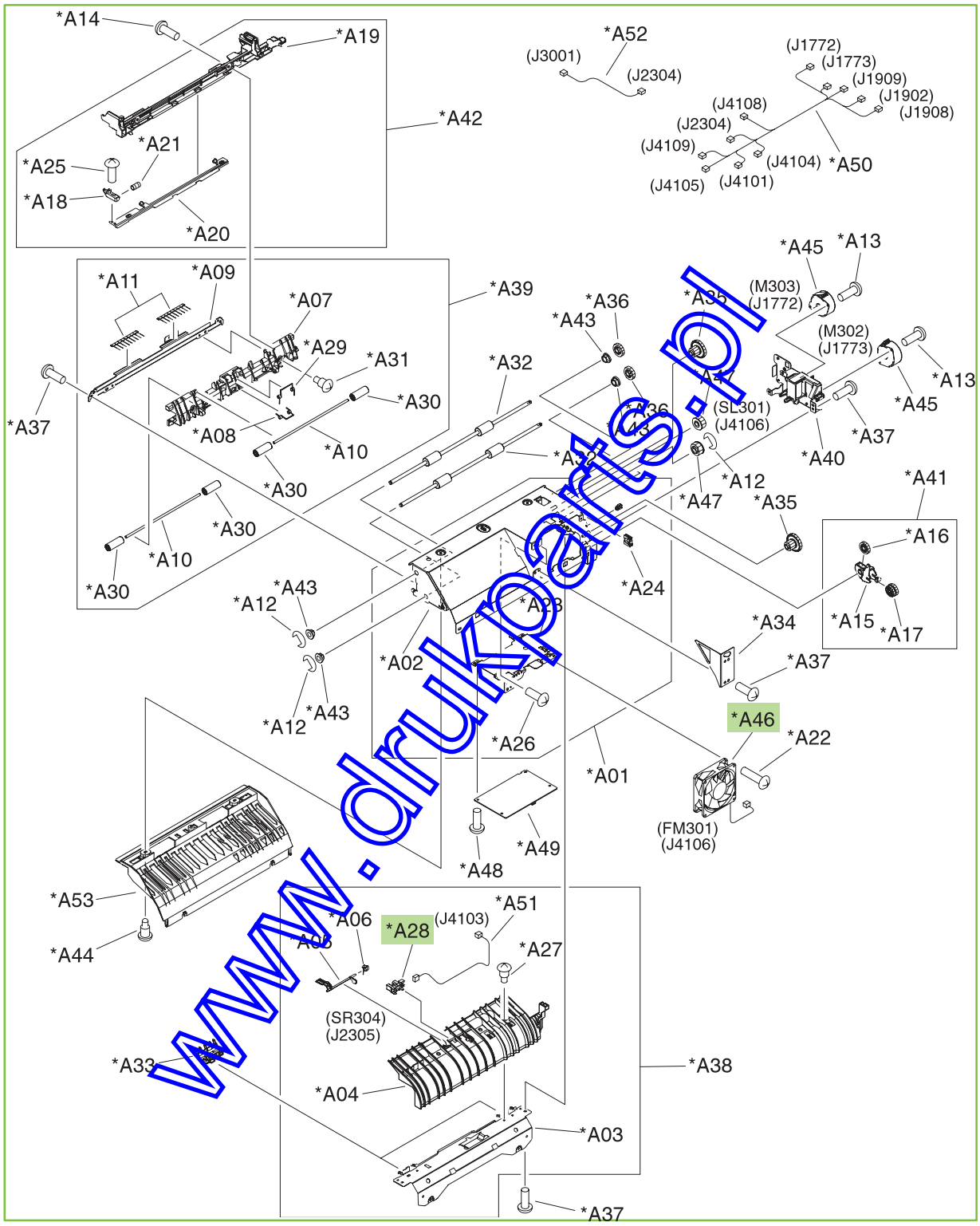

www.drukoarts.pl

Table 9-19 Printer duplexing-reverse assembly

Ref	Description	Part number	Qty
All	Duplexing-reverse assembly	RM1-3652-000CN	1
A28	Photo interrupter, TLP1243	WG8-5696-000CN	1
A46	Fan	RK2-1378-000CN	1

NOTE: Only highlighted parts are orderable.

www.drukparts.pl

Figure 9-22 Printer duplexing-tray assembly (duplex model)

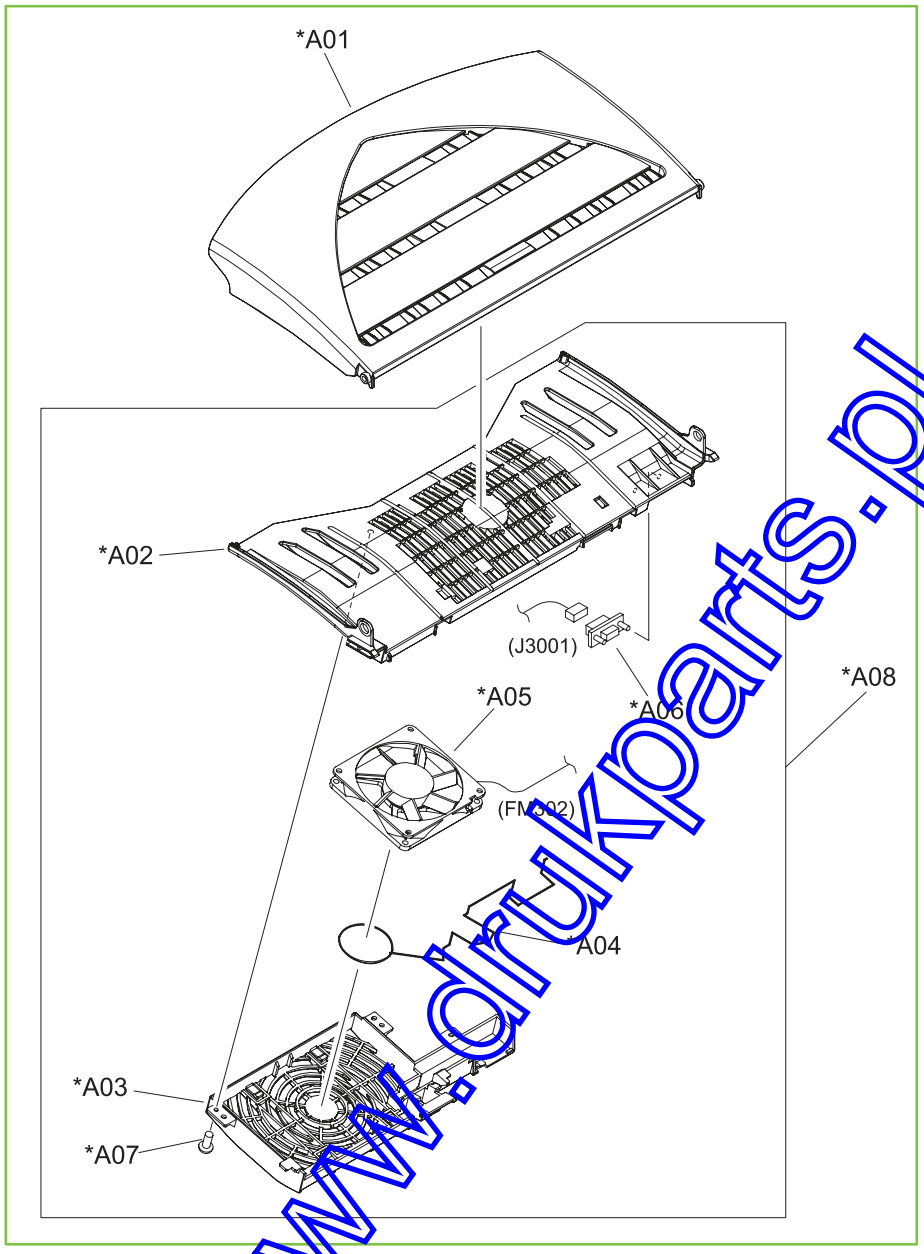

www.drukparts.pl

Table 9-20 Printer duplexing-tray assembly

Ref	Description	Part number	Qty
All	Duplex-switchback tray assembly kit	Q3931-67921	1

NOTE: Only highlighted parts are orderable.

www.drukparts.pl

Figure 9-23 Printer duplexing-feed assembly (duplex model)

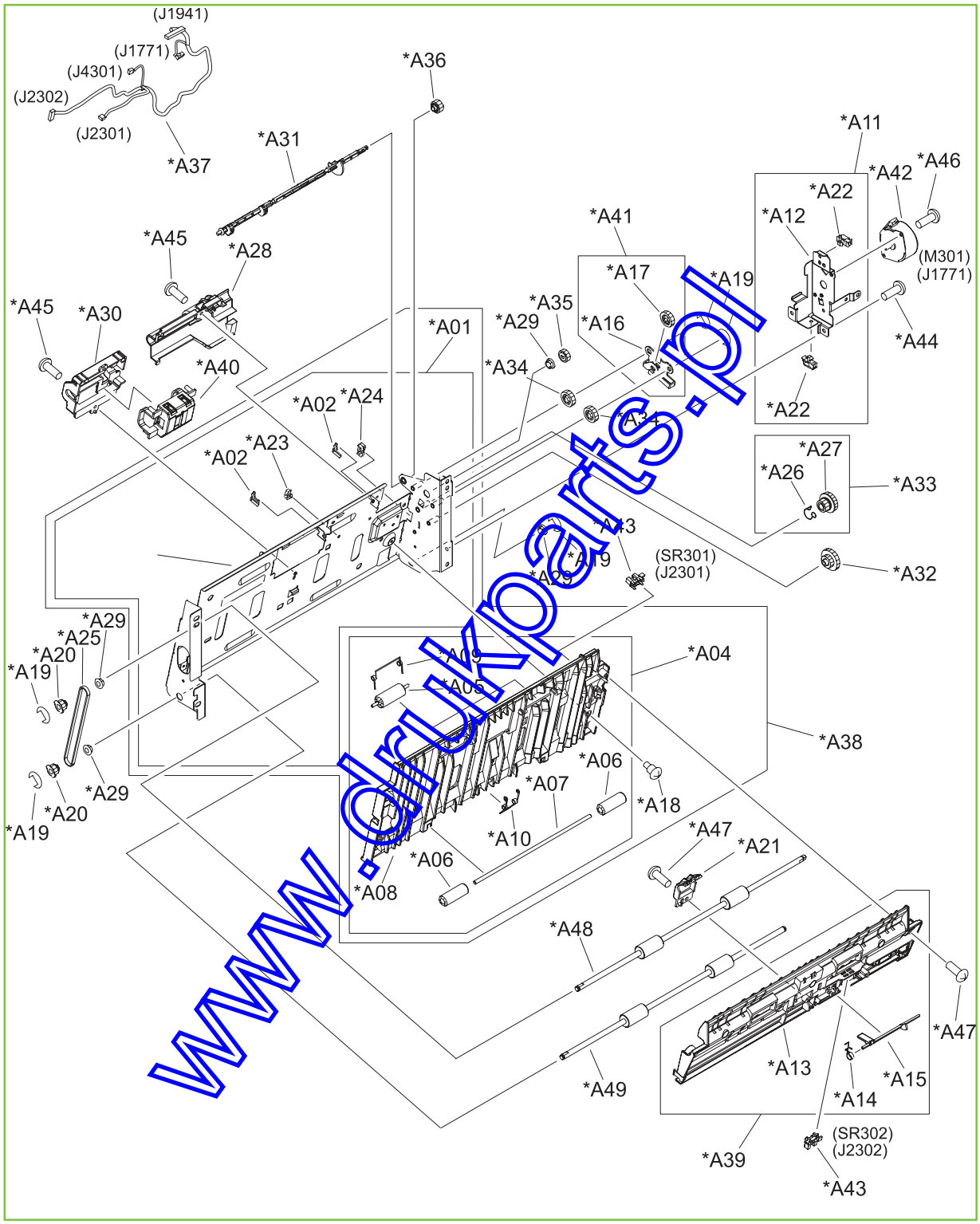

www.drukparts.pl

Table 9-21 Printer duplexing-feed assembly

Ref	Description	Part number	Qty
All	Duplexing-feed assembly	RM1-3665-000CN	1

NOTE: Only highlighted parts are orderable.

www.drukparts.pl

Figure 9-24 Printer PCA assembly location

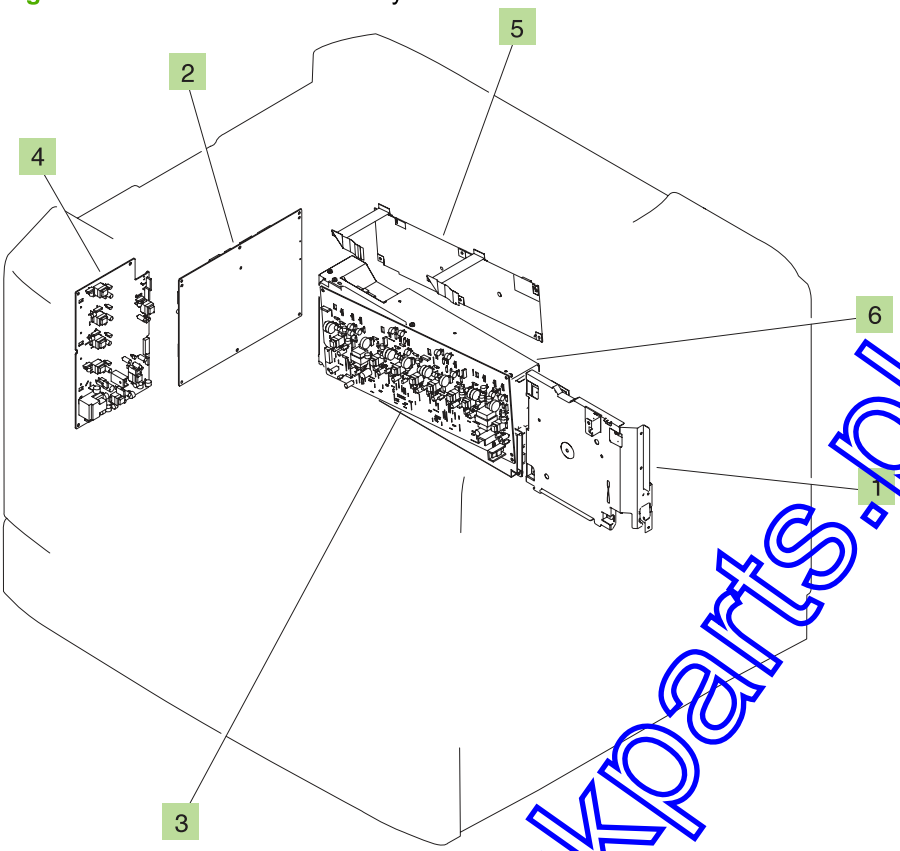

www.drukparts.pl

Table 9-22 Printer PCA assembly location

Ref	Description	Part number	Qty
1	Fixing power-supply assembly	RM1-3218-000CN	1
2	DC controller kit with service document	Q3931-67922	1
3	High-voltage-transfer A PCA assembly	RM1-3582-000CN	1
4	High-voltage-transfer B PCA assembly	RM1-5475-000CN	1
5	Memory-tag PCA assembly	RM1-3585-000CN	1
6	Low-voltage power-supply assembly	RM1-3594-000CN	1

NOTE: Only highlighted parts are orderable.

www.drukparts.pl

Input accessories

Input trays

Figure 9-25 Input-tray units (1x500-sheet and 3x500-sheet)

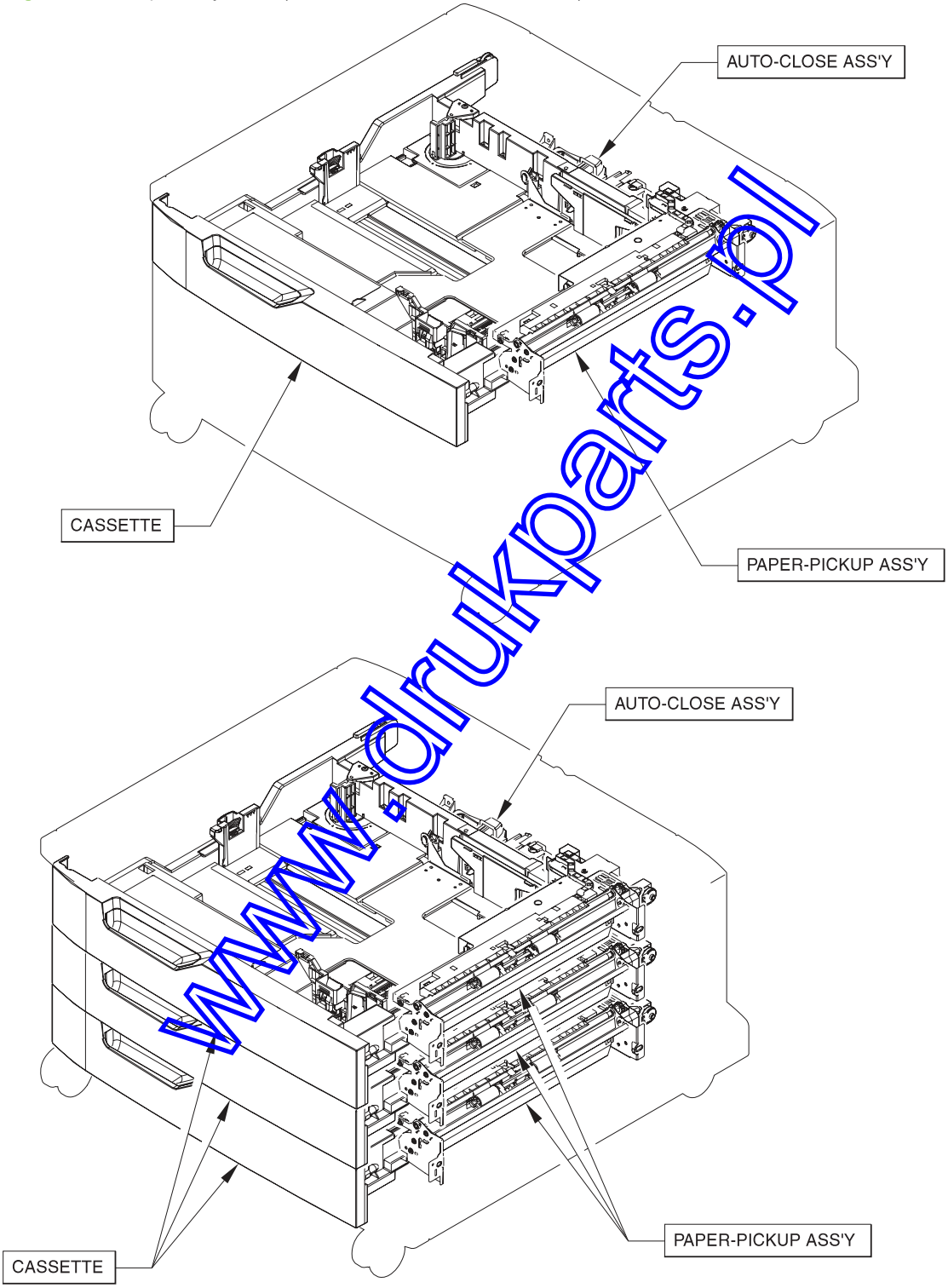

www.drukparts.pl

NOTE: Only highlighted parts are orderable.

www.drukparts.pl

Figure 9-26 Input-tray main body (1x500-sheet)

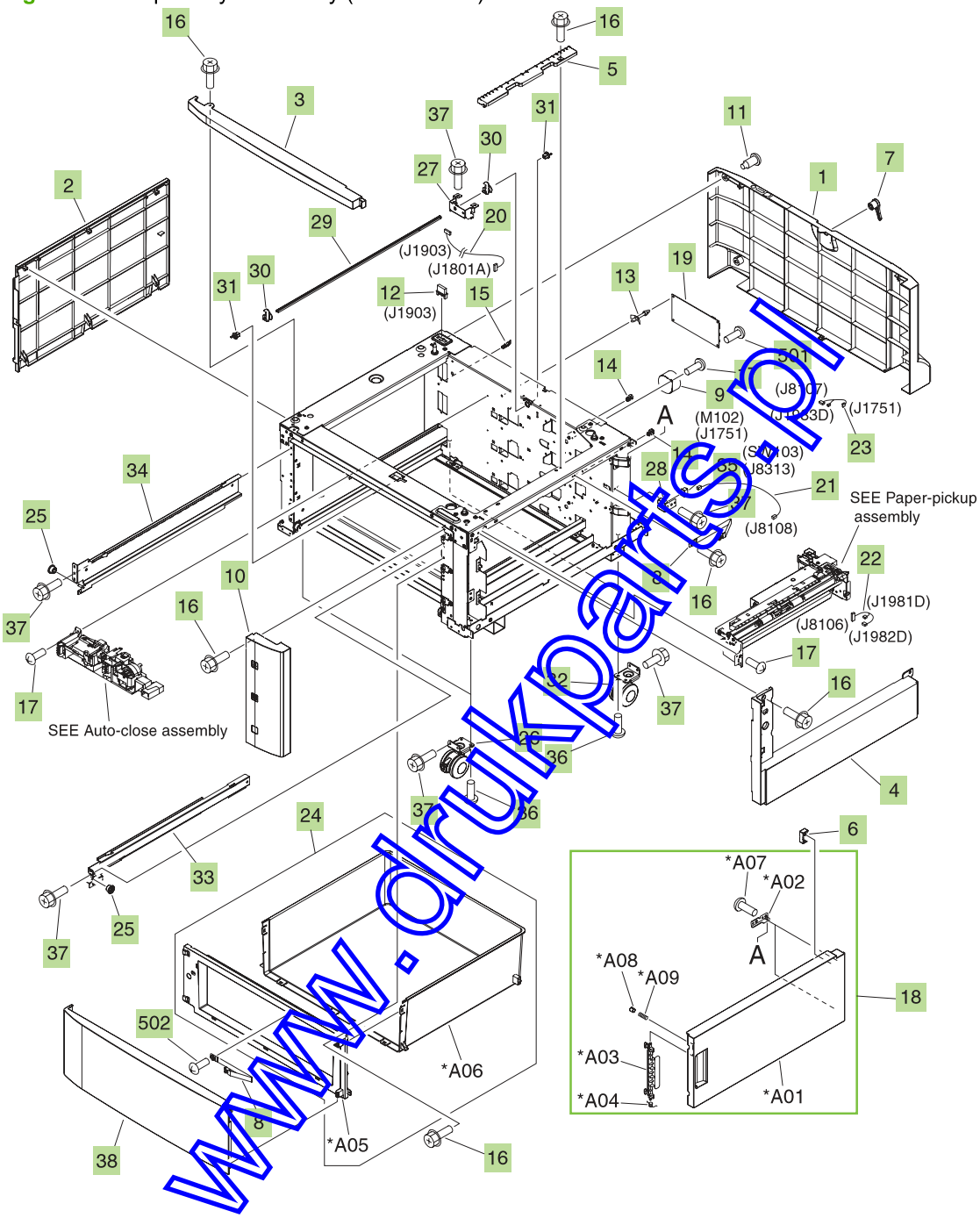

www.drukparts.pl

Table 9-23 Input-tray main body (1x500-sheet)

Ref	Description	Part number	Qty
1	Cover, rear	RC1-9871-000CN	1
2	Cover, left	RC1-9872-000CN	1
3	Cover, front-upper	RC1-9873-000CN	1
4	Cover, right-lower	RC1-9874-000CN	1
5	Guide, paper-feed roller	RC1-9881-000CN	1
6	Stopper, right-door	RC1-9882-000CN	1
7	Lever, lock	RC1-9883-000CN	1
8	Tape, door	RC1-9884-000CN	2
9	Motor, stepping, DC	RK2-1331-000CN	1
10	Cover, right-front	RL1-1322-000CN	1
11	Screw, stepped	RS5-9039-000CN	4
12	Connector, drawer	VS1-7257-012CN	1
13	Support, PCA	VT2-0001-008CN	2
14	Saddle, wire	WT2-5694-000CN	2
15	Clamp, cable	WT2-5738-000CN	1
16	Screw, RS, M4x8	XA9-1448-000CN	13
14	Screw, TP, M3x6	XA9-1469-000CN	7
15	Right-door assembly	RM1-3538-000CN	1
19	Paper-feed PCA assembly	RM1-3569-000CN	1
20	Cable, pickup-option drawer	RM1-3571-000CN	1
21	Cable, pickup-option door switch	RM1-3572-000CN	1
22	Cable, option-sensor PCA connect	RM1-3574-000CN	1
23	Cable, paper-pickup option	RM1-3575-000CN	1
24	Stock-box assembly	RM1-3539-000CN	1
25	Roller, rail	RC1-9231-000CN	4
26	Caster, double-lock, front	RC1-9896-000CN	2
27	Support, lock-shaft	RC1-9900-000CN	1
28	Plate, switch-cover	RC1-9901-000CN	1
29	Shaft, lock	RC1-9912-000CN	1
30	Arm, lock	RC1-9913-000CN	2
31	Bushing	RC1-9915-000CN	2
32	Caster, rear	RC1-9917-000CN	2
33	Rail, cassette, right	RL1-1310-000CN	2
34	Rail, cassette, left	RL1-1311-000CN	2

www.drukparts.pl

Table 9-23 Input-tray main body (1x500-sheet) (continued)

Ref	Description	Part number	Qty
35	Switch, button	WC2-5512-000CN	1
36	Screw, with washer, M5x12	XA9-0912-000CN	8
37	Screw, RS, M4x8	XA9-1448-000CN	75
38	Door, stock	RC1-9921-000CN	1
501	Screw, with washer, M3x6	XB2-8300-607CN	2
502	Screw, tapping, pan-head, M4x10	XB4-7401-006CN	1

NOTE: Only highlighted parts are orderable.

www.drukparts.pl

www.drukparts.pl

Figure 9-27 Input-tray main body (3x500-sheet)

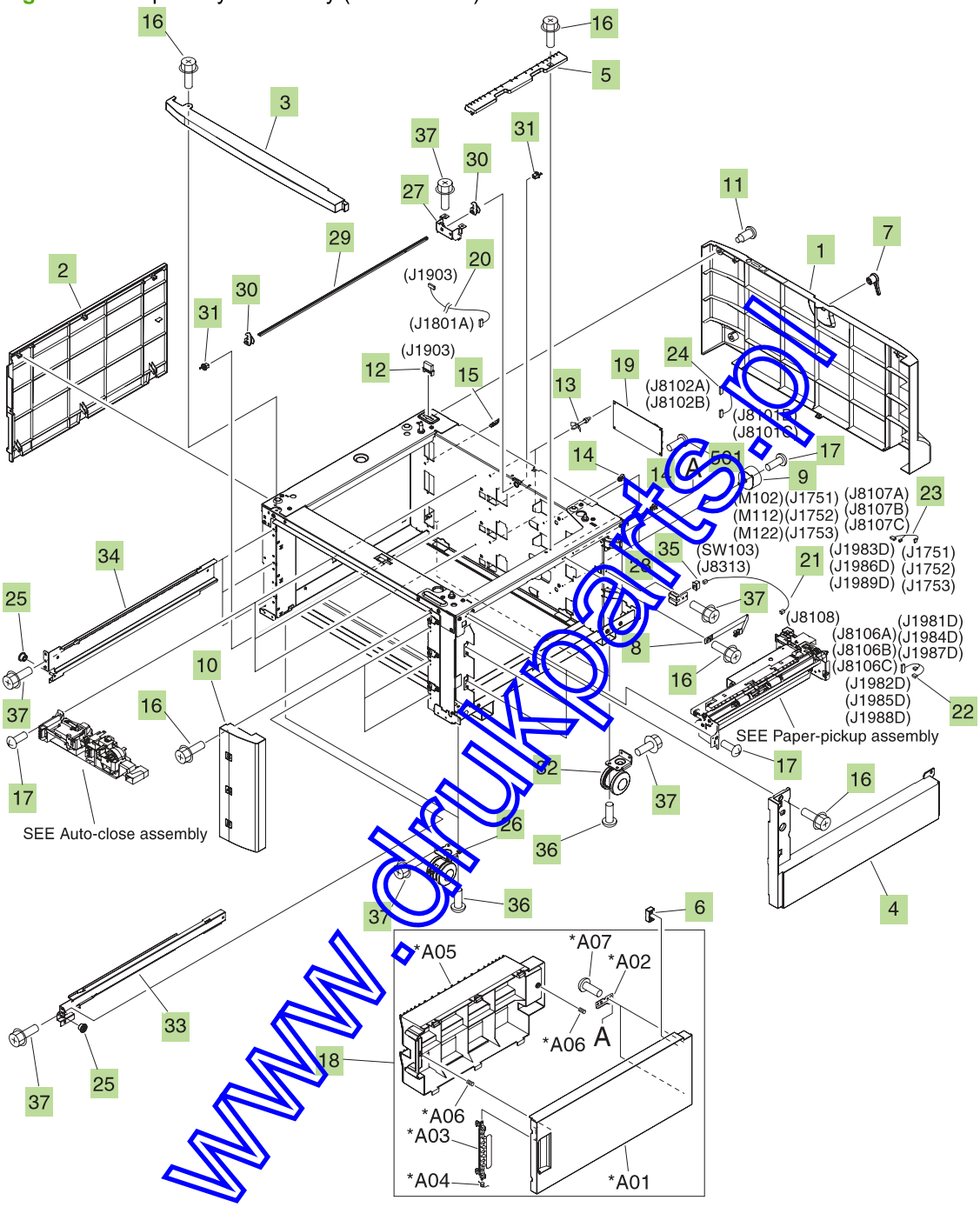

www.drukparts.pl

Table 9-24 Input-tray main body (3x500-sheet)

Ref	Description	Part number	Qty
1	Cover, rear	RC1-9871-000CN	1
2	Cover, left	RC1-9872-000CN	1
3	Cover, front-upper	RC1-9873-000CN	1
4	Cover, right-lower	RC1-9874-000CN	1
5	Guide, paper-feed roller	RC1-9881-000CN	1
6	Stopper, right-door	RC1-9882-000CN	1
7	Lever, lock	RC1-9883-000CN	1
8	Tape, door	RC1-9884-000CN	1
9	Motor, stepping, DC	RK2-1331-000CN	3
10	Cover, right-front	RL1-1321-000CN	1
11	Screw, stepped	RS5-9039-000CN	4
12	Connector, drawer	VS1-7257-012CN	1
13	Support, PCA	VT2-0001-008CN	6
14	Saddle, wire	WT2-5694-000CN	2
15	Clamp, cable	WT2-5738-000CN	1
16	Screw, RS, M4x8	XA9-1448-000CN	10
17	Screw, TP, M3x6	XA9-1469-000CN	21
18	Right-door assembly	RM1-3537-000CN	1
19	Paper-feed PCA assembly	RM1-3569-000CN	3
20	Cable, paper-pickup-option drawer	RM1-3571-000CN	1
21	Cable, pickup-option door switch	RM1-3572-000CN	1
22	Cable, option-sensor PCA connect	RM1-3574-000CN	3
23	Cable, paper-pickup option	RM1-3575-000CN	3
24	Cable, pickup-option PCA connect	RM1-3573-000CN	2
25	Roller, rail	RC1-9231-000CN	6
26	Caster, double-lock, front	RC1-9896-000CN	2
27	Support, lock-shaft	RC1-9900-000CN	1
28	Plate, switch-cover	RC1-9901-000CN	1
29	Shaft, lock	RC1-9912-000CN	1
30	Arm, lock	RC1-9913-000CN	2
31	Bushing	RC1-9915-000CN	2
32	Caster, rear	RC1-9917-000CN	2
33	Rail, cassette, right	RL1-1310-000CN	3
34	Rail, cassette, left	RL1-1311-000CN	3

www.drukparts.pl

Table 9-24 Input-tray main body (3x500-sheet) (continued)

Ref	Description	Part number	Qty
35	Switch, button	WC2-5512-000CN	1
36	Screw, with washer, M5x12	XA9-0912-000CN	8
37	Screw, RS, M4x8	XA9-1448-000CN	77
501	Screw, with washer, M3x6	XB2-8300-607CN	6

NOTE: Only highlighted parts are orderable.

www.drukparts.pl

www.drukparts.pl

Figure 9-28 Input-tray auto-close assembly

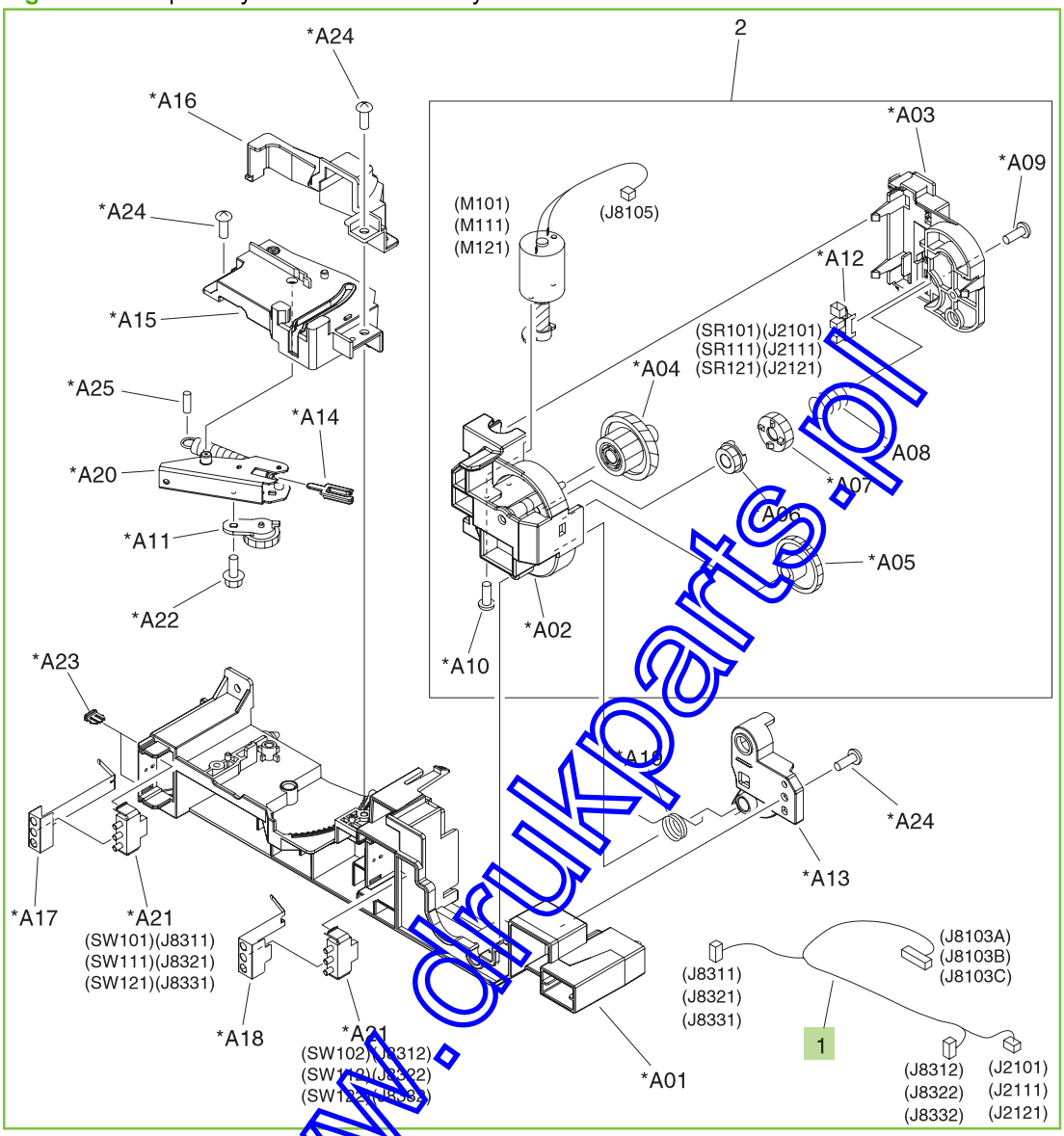

www.drukparts.pl

Table 9-25 Input-tray auto-close assembly

Ref	Description	Part number	Qty
All	Auto-close assembly, 1x500-sheet	RM1-3531-040CN	1
All	Auto-close assembly, 3x500-sheet	RM1-3531-040CN	3
1	Cable, pickup-option lifter unit	RM1-3576-000CN	1

NOTE: Only highlighted parts are orderable.

www.drukparts.pl

Figure 9-29 Input-tray cassette

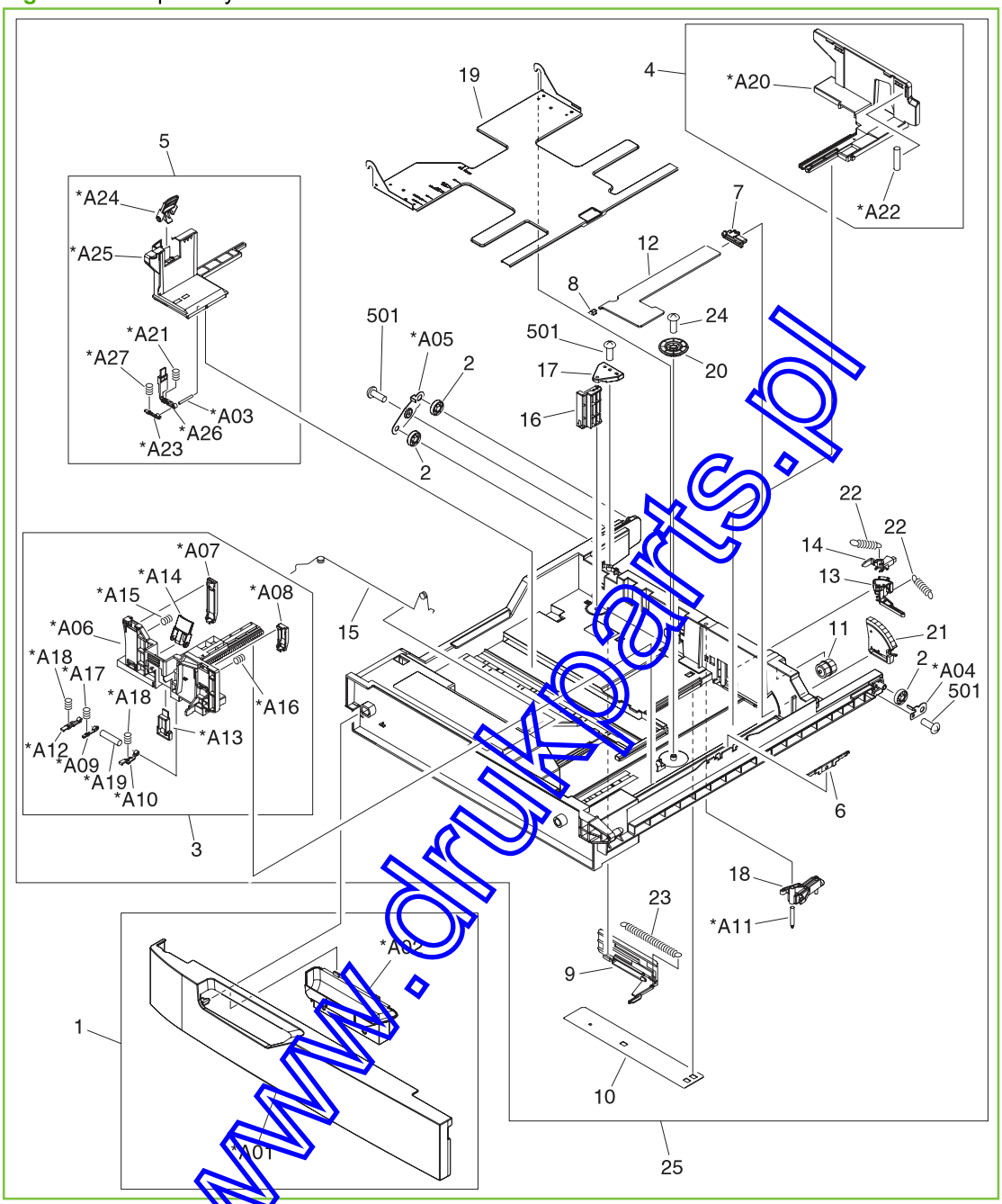

www.drukparts.pl

Table 9-26 Input-tray cassette

Ref	Description	Part number	Qty
All	Cassette (1x500-sheet)	RM1-3529-000CN	1
All	Cassette (3x500-sheet)	RM1-3529-000CN	3

NOTE: Only highlighted parts are orderable.

www.drukparts.pl

Figure 9-30 Input-tray paper-pickup assembly

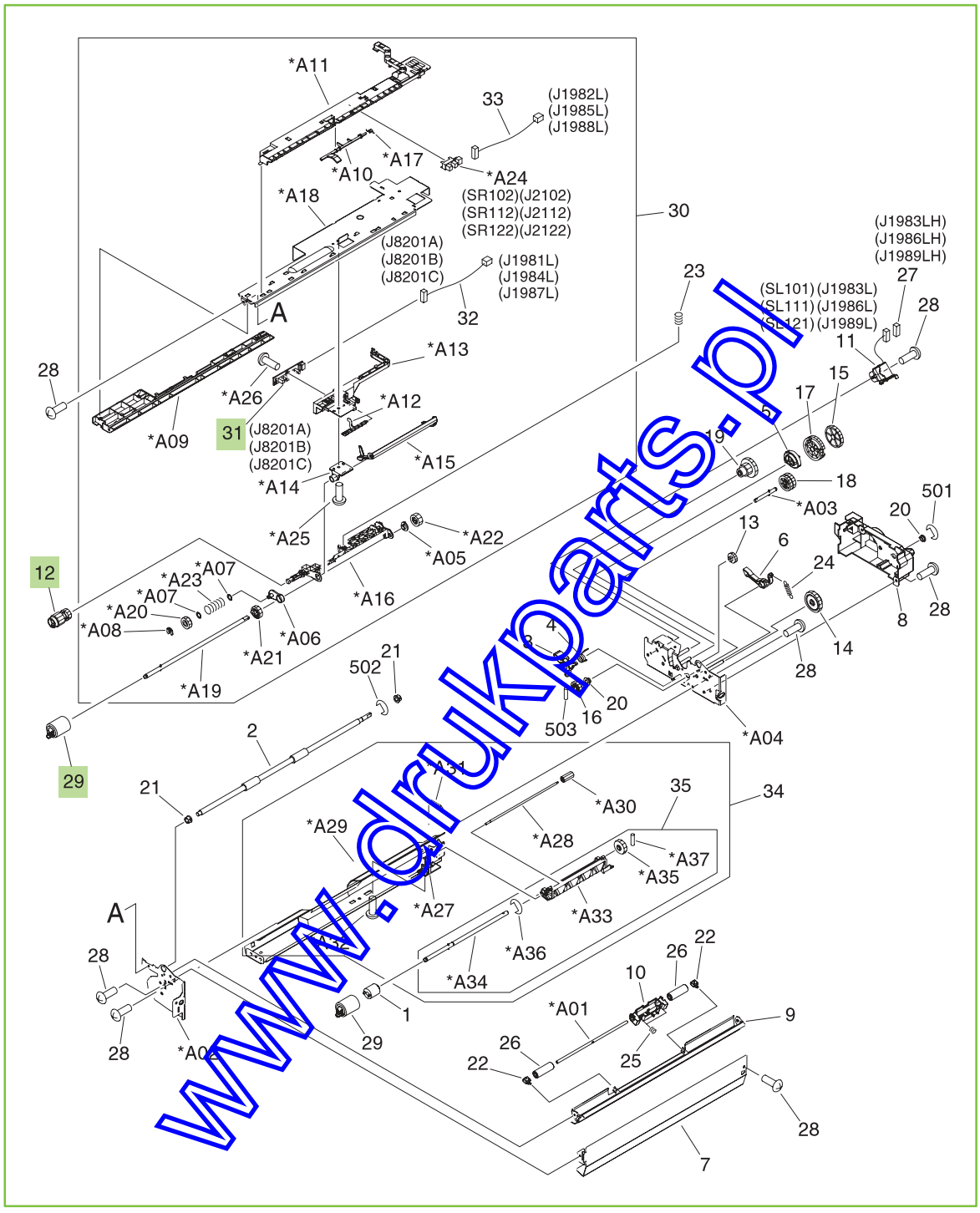

www.drukparts.pl

Table 9-27 Input-tray paper-pickup assembly

Ref	Description	Part number	Qty
All	Paper-pickup assembly (1x500-sheet)	RM1-3533-000CN	1
All	Paper-pickup assembly (3x500-sheet)	RM1-3533-000CN	1
12	Roller, paper-pickup	RL1-1289-000CN	1
29	Paper feed-roller assembly	RM1-0037-020CN	2
31	Option paper-sensor PCA assembly	RM1-3570-000CN	1

NOTE: Only highlighted parts are orderable.

www.drukparts.pl

Figure 9-31 Input-tray PCA assembly

1x500

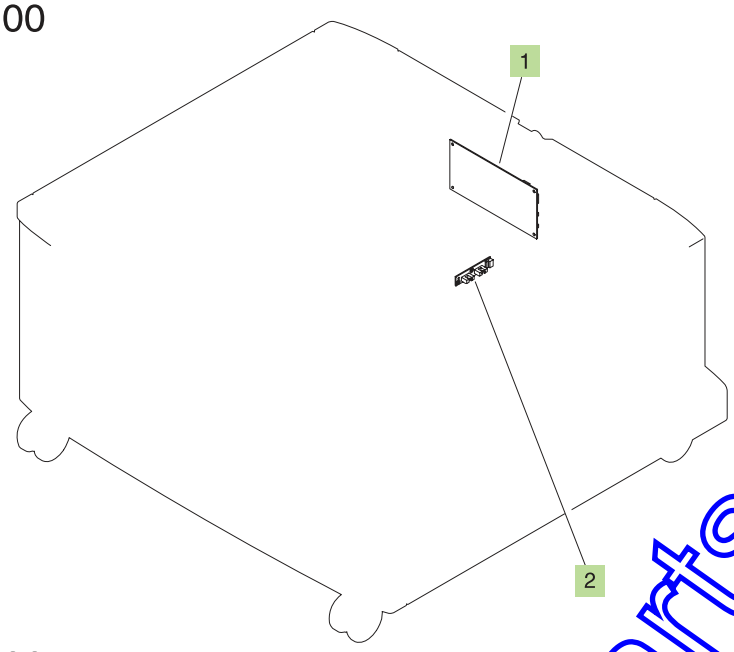

3x500

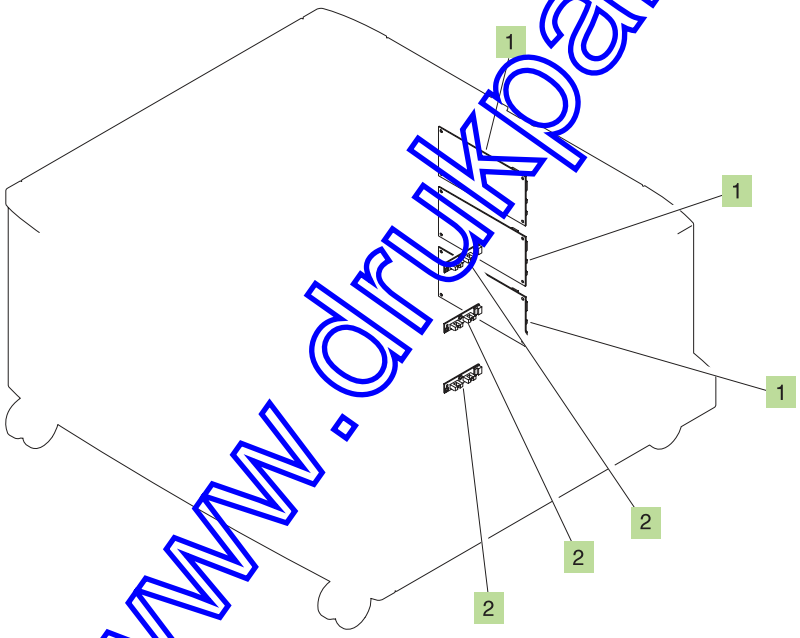

www.drukparts.pl

Table 9-28 Input-tray PCA assembly

Ref	Description	Part number	Qty
1	Paper-feed PCA assembly (1x500-sheet)	RM1-3569-000CN	1
1	Paper-feed PCA assembly (3x500-sheet)	RM1-3569-000CN	3

NOTE: Only highlighted parts are orderable.

www.drukparts.pl

Output accessories

Intermediate paper-transfer unit (IPTU)

Figure 9-32 Intermediate-feed main body

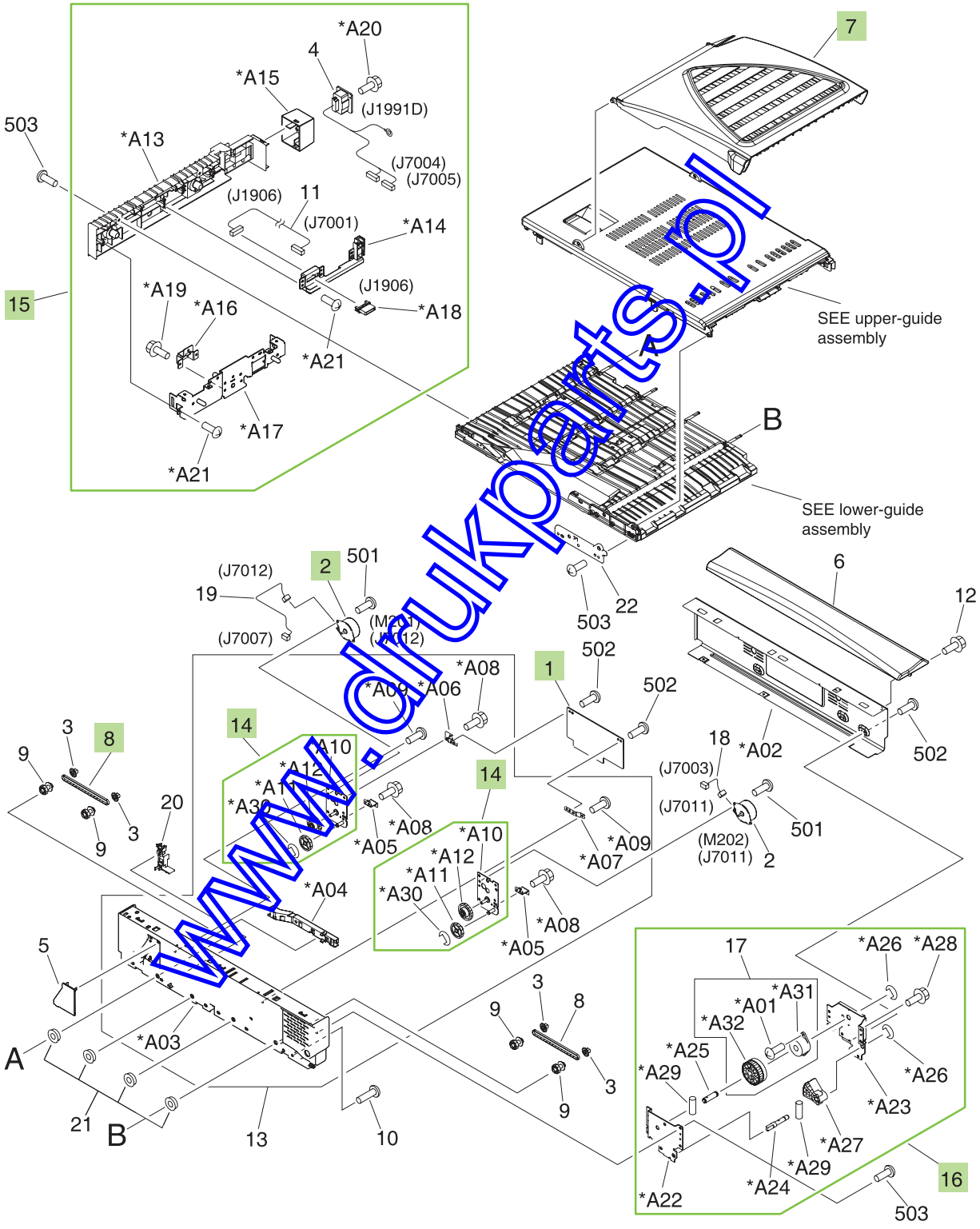

www.drukparts.pl

Table 9-29 Intermediate-feed main body

Ref	Description	Part number	Qty
1	Intermediate paper-transfer unit (IPTU)-driver PCA assembly	RM1-3559-000CN	1
2	Motor, stepping, DC	RK2-1320-000CN	2
7	Cover, intermediate-feed SW.	RC1-9667-000CN	1
8	Belt, paper-feed, cogged	RC1-9674-000CN	2
14	Drive-belt assembly	RM1-3684-000CN	2
15	Fin-lock assembly	RM1-3685-000CN	1
16	Damper assembly	RM1-3688-000CN	1

NOTE: Only highlighted parts are orderable.

www.drukparts.pl

Figure 9-33 Intermediate-feed lower-guide assembly

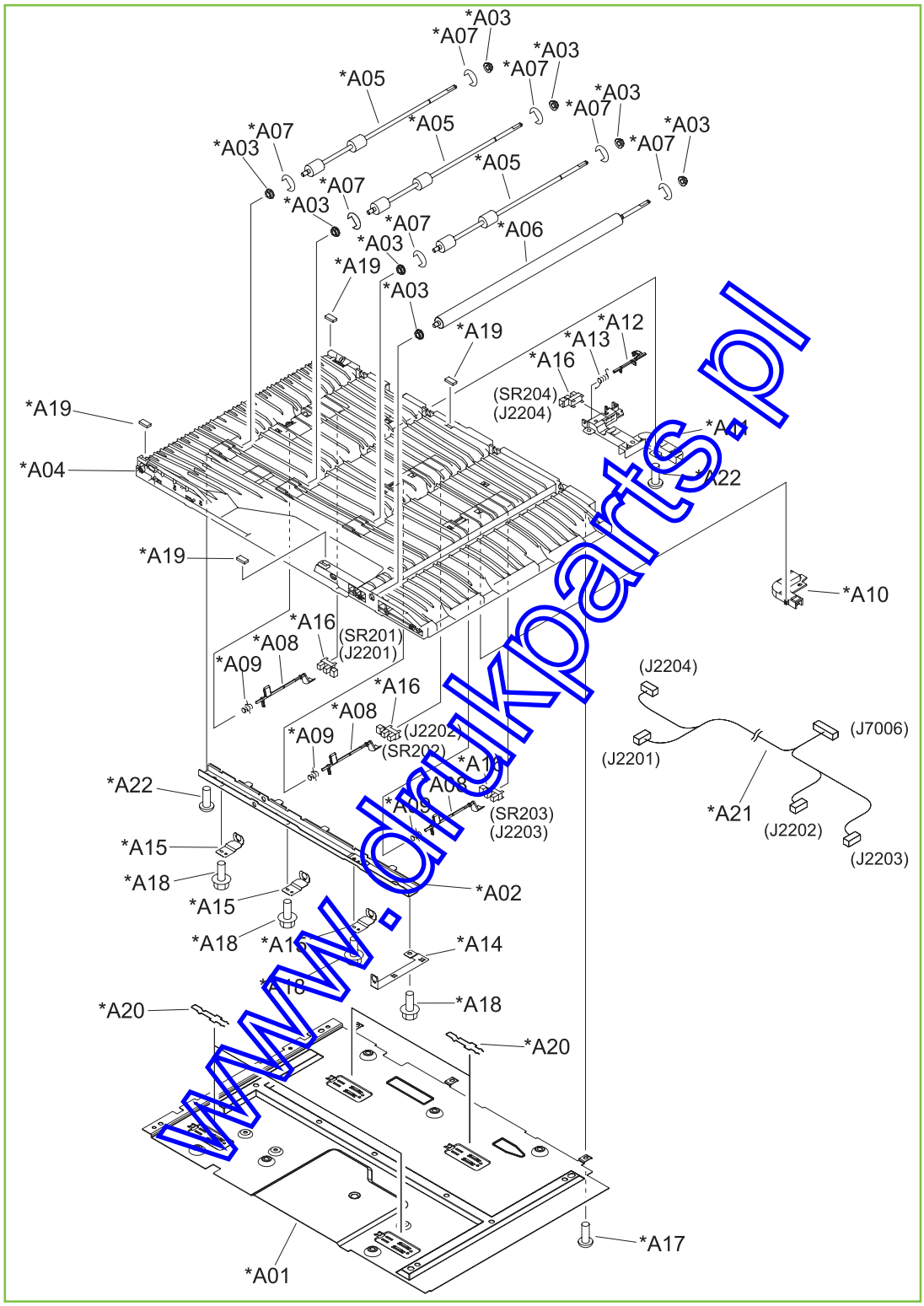

www.drukparts.pl

Table 9-30 Intermediate-feed lower-guide assembly

Ref	Description	Part number	Qty
All	Lower-guide assembly	RM1-3686-000CN	1

NOTE: Only highlighted parts are orderable.

www.drukparts.pl

Figure 9-34 Intermediate-feed upper-guide assembly

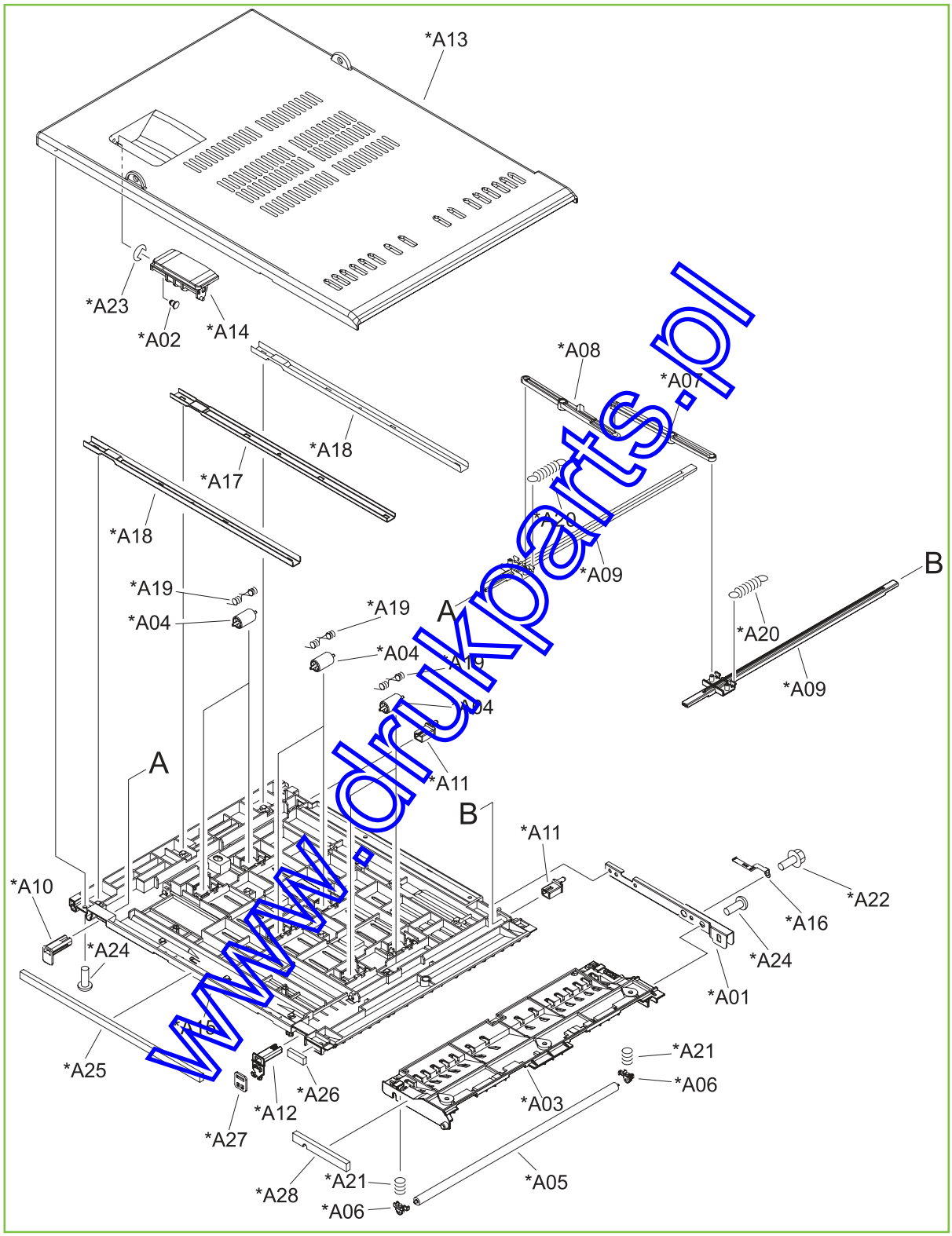

www.drukparts.pl

Table 9-31 Intermediate-feed upper-guide assembly

Ref	Description	Part number	Qty
All	Upper-guide assembly	RM1-3687-000CN	1

NOTE: Only highlighted parts are orderable.

www.drukparts.pl

Figure 9-35 PCA assembly

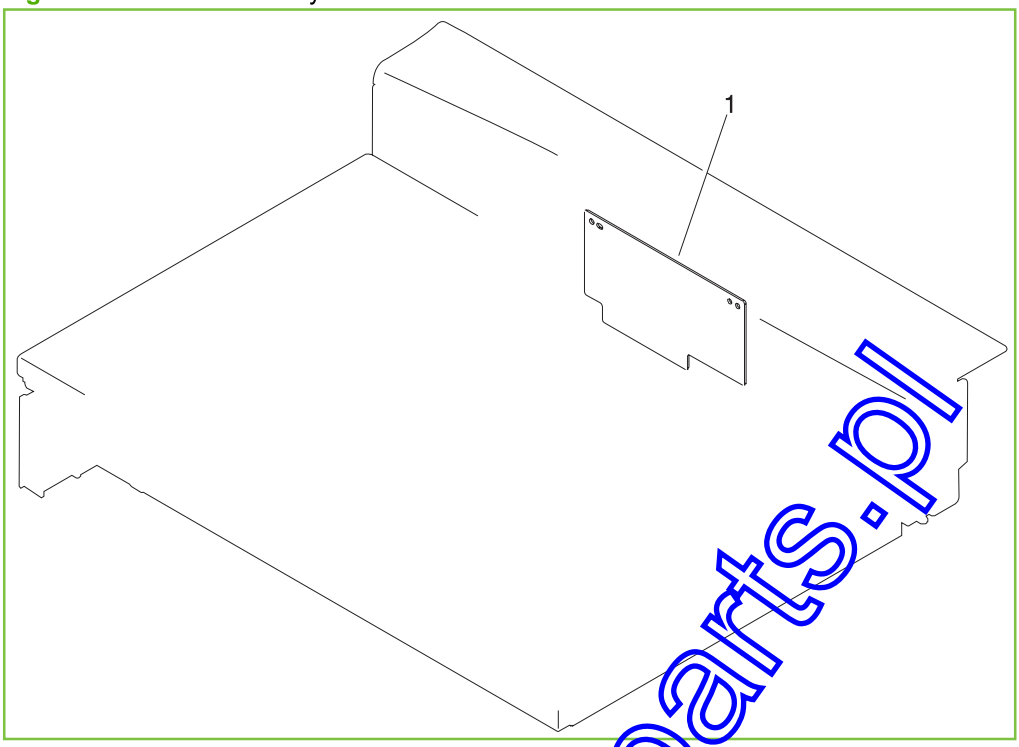

www.drukparts.pl

Table 9-32 PCA assembly

Ref	Description	Part number	Qty
1	Intermediate paper-transfer unit (IPTU)-driver PCA assembly	RM1-3559-000CN	1

NOTE: Only highlighted parts are orderable.

www.drukparts.pl

Stapler/stacker and booklet-maker

Figure 9-36 Stapler/stacker unit

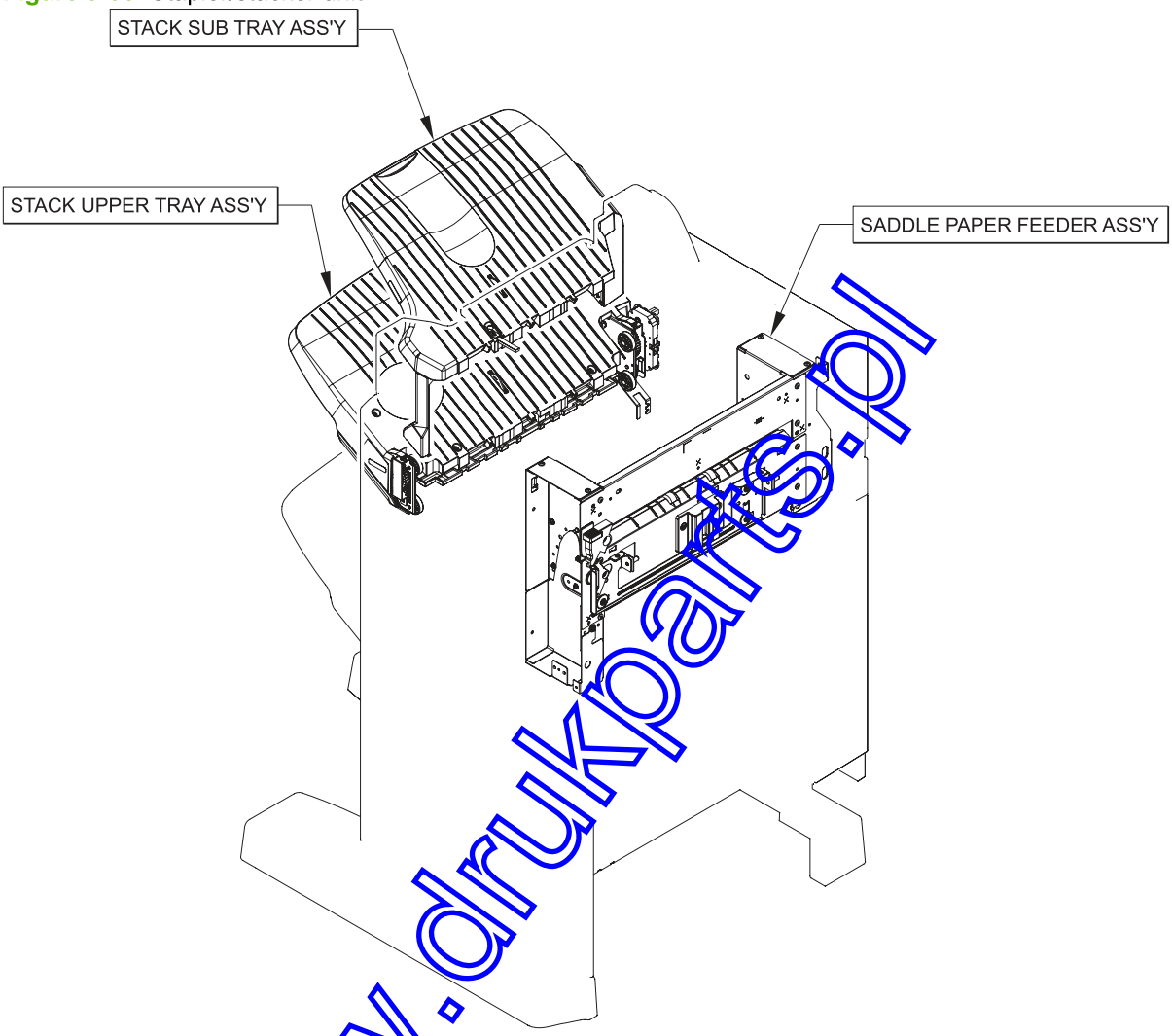

NOTE: Only highlighted parts are orderable.

www.drukparts.pl

Figure 9-37 Booklet-maker (multi-function finisher) whole unit

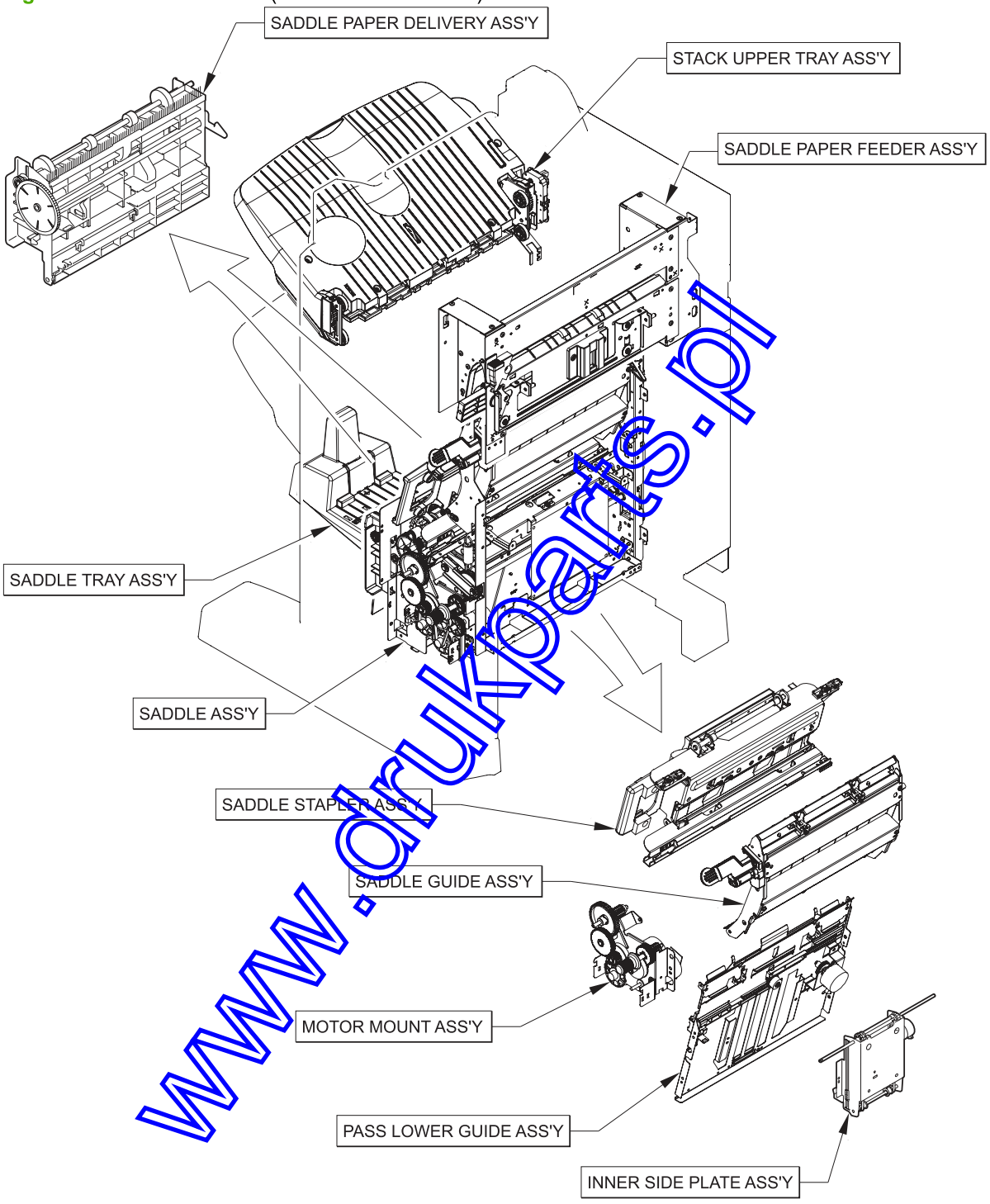

www.drukparts.pl

NOTE: Only highlighted parts are orderable.

Figure 9-38 External panels and covers (stapler/stacker)

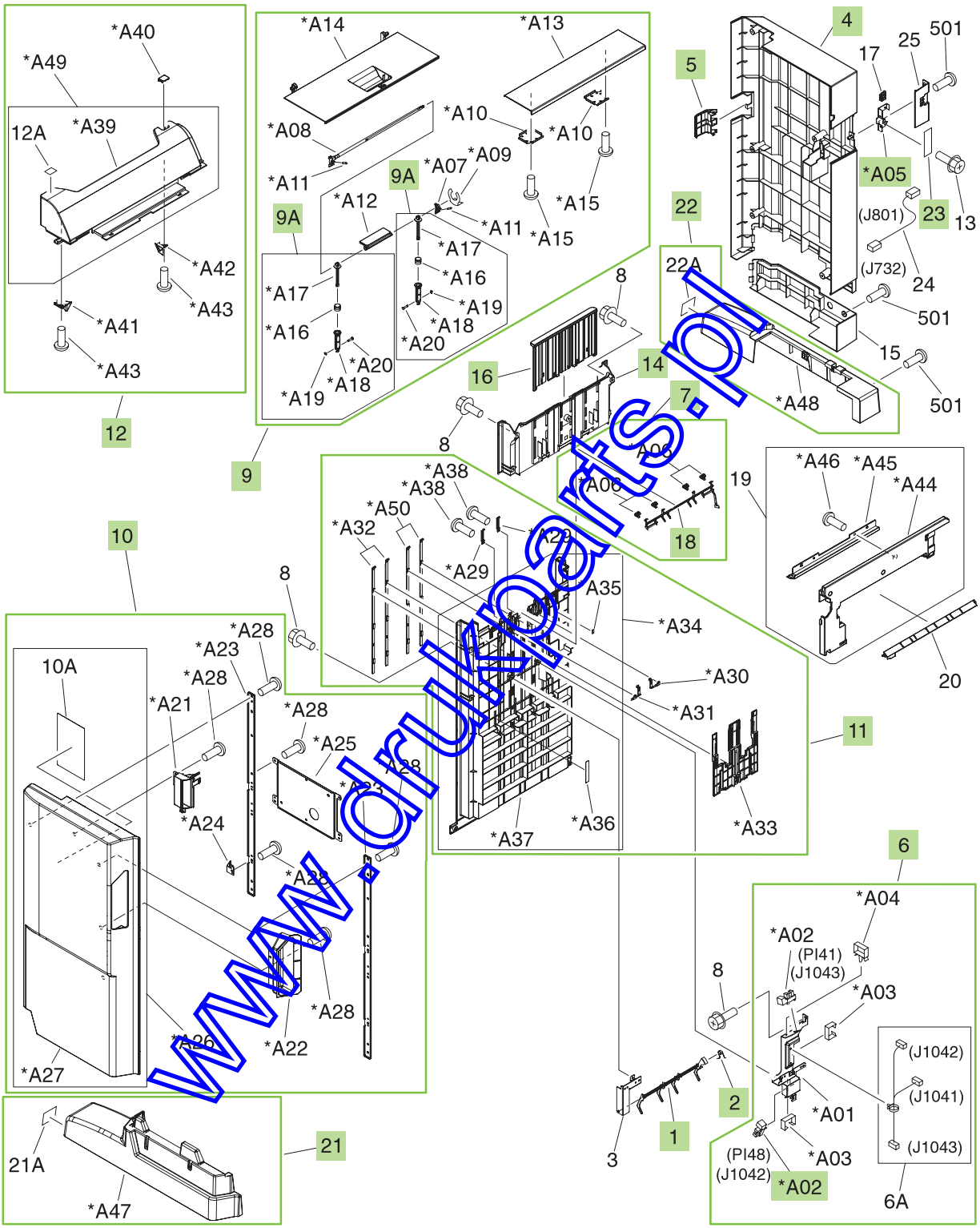

www.druk-arts.pl

Table 9-33 External panels and covers (stapler/stacker)

Ref	Description	Part number	Qty
1	Flag, paper-sensing sensor	FC5-5004-000CN	1
2	Spring, torsion	FC5-5005-000CN	1
4	Cover, rear	RC2-1278-000CN	1
5	Cover, tray-connector	RC2-1279-000CN	1
6	Paper-face sensor assembly	4G3-0934-000CN	1
7	Paper-face sensing assembly	4G3-1624-000CN	1
9	Top-door (upper-cover) assembly	RM1-4121-000CN	1
9A	Link-slide assembly	4G3-0271-000CN	2
10	Front-door assembly	RM1-4134-000CN	1
11	Lower height-guide assembly	RM1-4135-000CN	1
12	Left upper-cover assembly	RM1-4179-000CN	1
14	Panel, height, upper	RC2-1283-000CN	1
16	Cover, option-slide	RC2-1347-000CN	1
18	Flag, paper-face sensing, upper	FC5-4162-000CN	1
21	Cover, front-lower	RL1-1717-000CN	1
22	Cover, rear-lower	RL1-1718-000CN	1
23	LED-PCA assembly	RM1-4141-000CN	1
A02	Photo interrupter, TLP1242	WG8-5593-000CN	2
A05	Mount, LED-PCA	RC2-1735-000CN	1

NOTE: Only highlighted parts are orderable.

www.drukparts.pl

Figure 9-39 External panels and covers (booklet-maker)

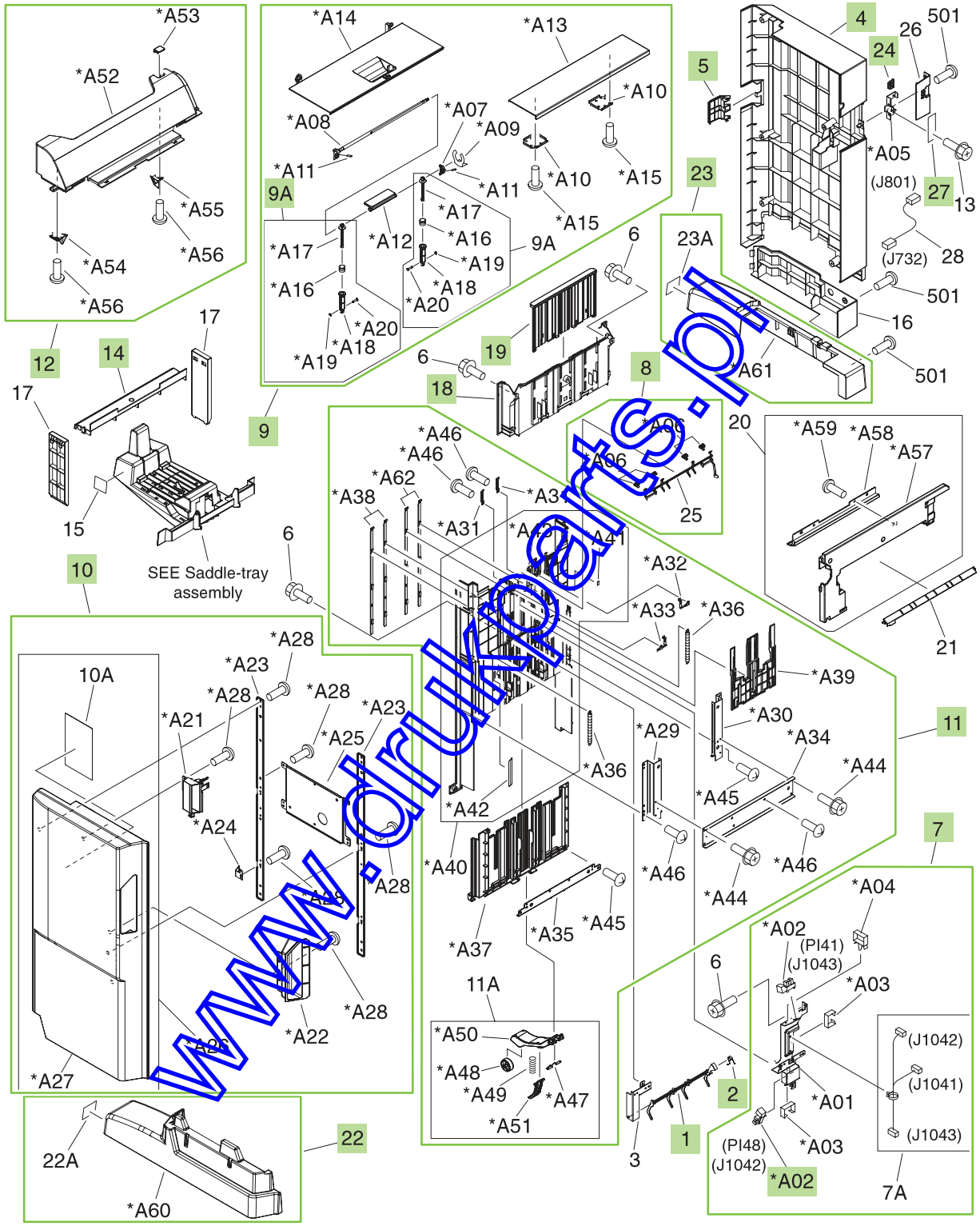

www.druckparts.pl

Table 9-34 External panels and covers (booklet-maker)

Ref	Description	Part number	Qty
1	Flag, paper-sensing sensor	FC5-5004-000CN	1
2	Spring, torsion	FC5-5005-000CN	1
4	Cover, rear	RC2-1278-000CN	1
5	Cover, tray-connector	RC2-1279-000CN	1
7	Paper-face sensor assembly	4G3-0934-000CN	1
8	Paper-face sensing assembly	4G3-1624-000CN	1
9	Top-door (upper-cover) assembly	RM1-4121-000CN	1
9A	Link-slide assembly	4G3-0271-000CN	2
10	Front-door assembly	RM1-4122-000CN	1
11	Middle-height cover assembly	RM1-4119-000CN	1
12	Left-upper cover assembly	RM1-4129-000CN	1
14	Cover, left-lower	RC2-1280-000CN	1
18	Panel, height, upper	RC2-1283-000CN	1
19	Guide, side-wall	RC2-1284-000CN	1
22	Cover, front-lower	RL1-1717-000CN	1
23	Cover, rear-lower	RL1-1718-000CN	1
24	Window, LED	RC2-1734-000CN	1
27	LED-PCA assembly	RM1-4141-000CN	1
A02	Photo interrupter, TLP1242	WG8-5593-000CN	2

NOTE: Only highlighted parts are orderable.

www.drukparts.pl

Figure 9-40 Finisher main body (1 of 5) (stapler/stacker and booklet-maker)

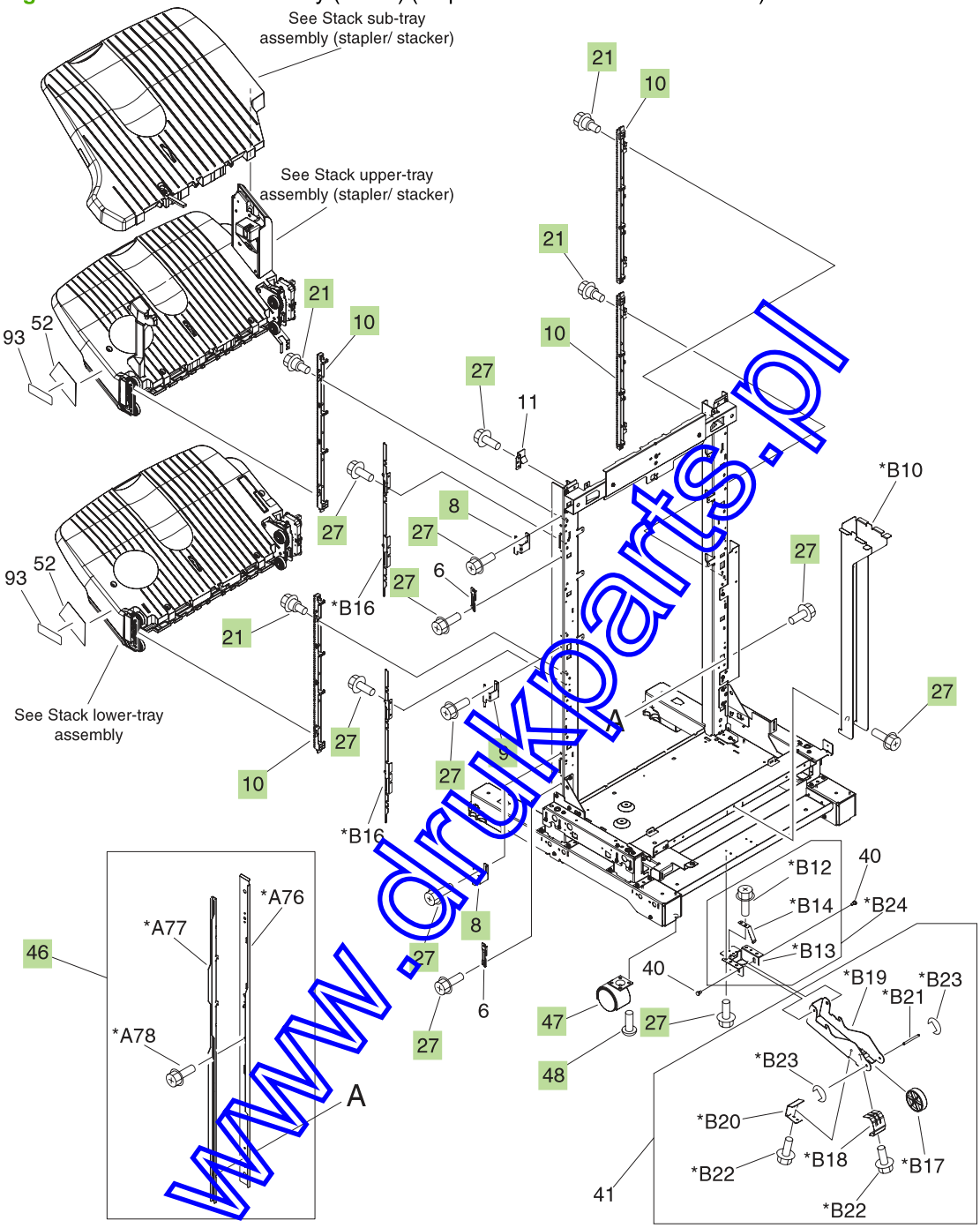

www.drukparts.pl

Figure 9-41 Finisher main body (2 of 5) (stapler/stacker and booklet-maker)

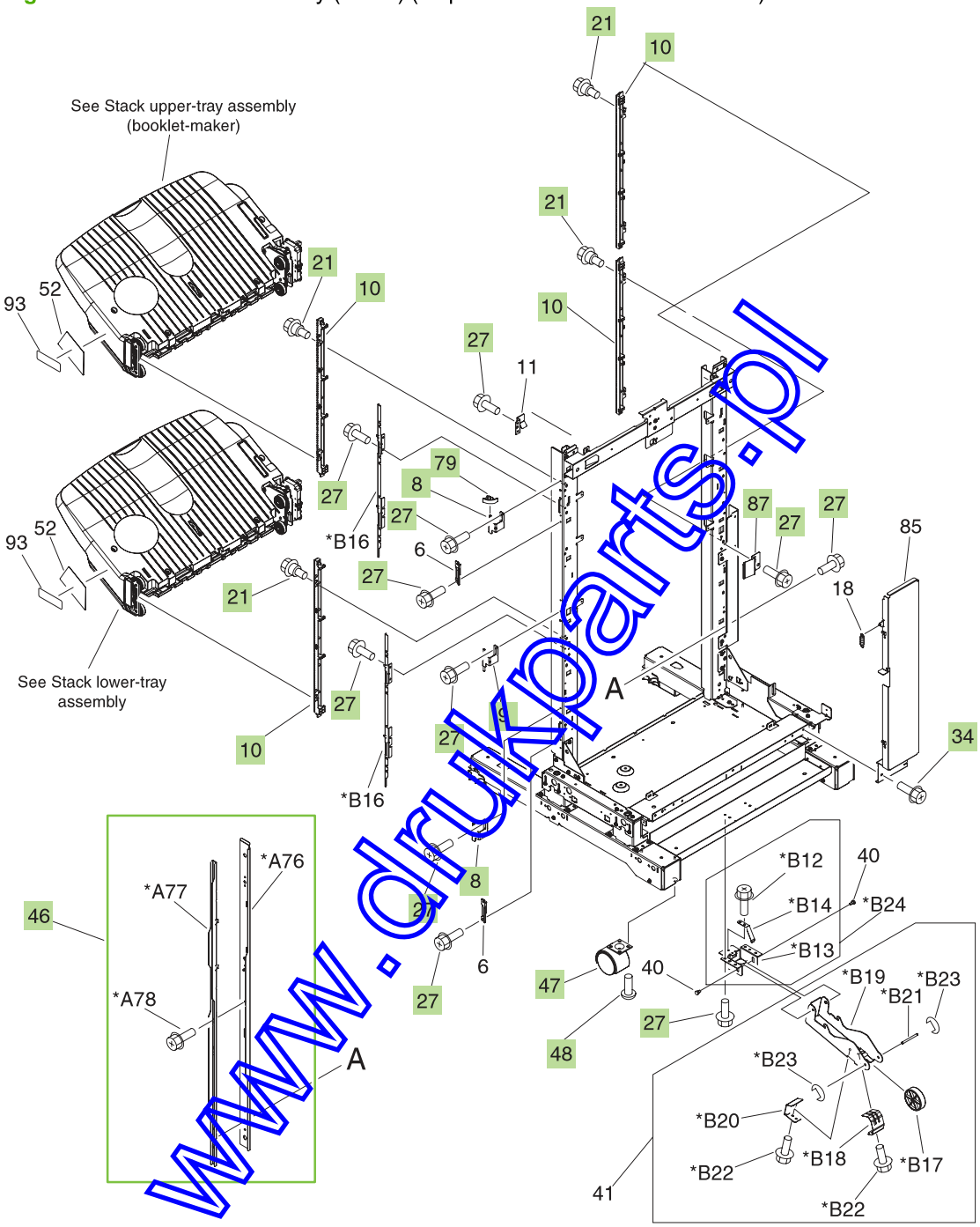

www.drukparts.pl

Figure 9-42 Finisher main body (3 of 5) (stapler/stacker and booklet-maker)

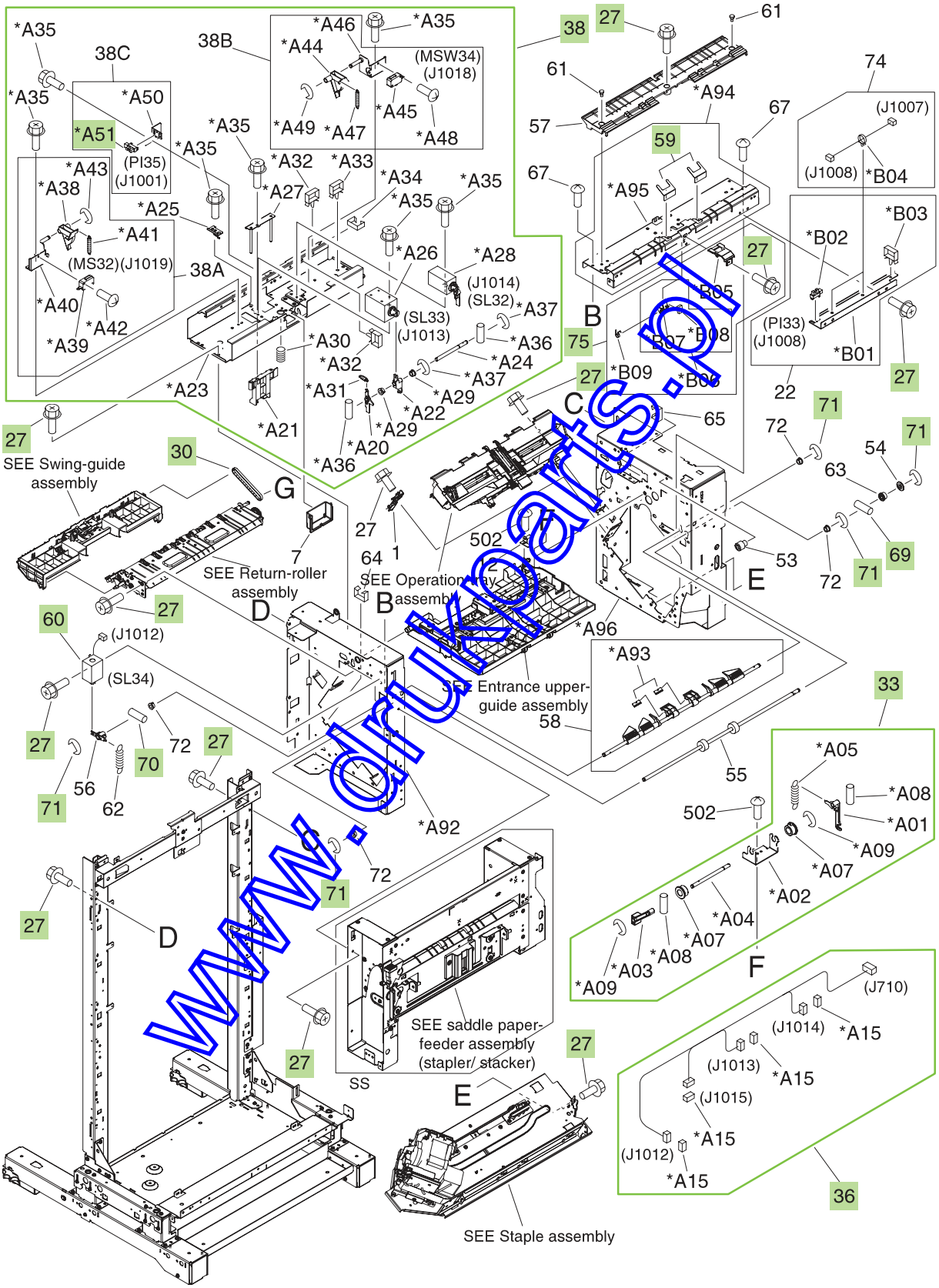

www.druk-arts.pl

Figure 9-43 Finisher main body (4 of 5) (stapler/stacker and booklet-maker)

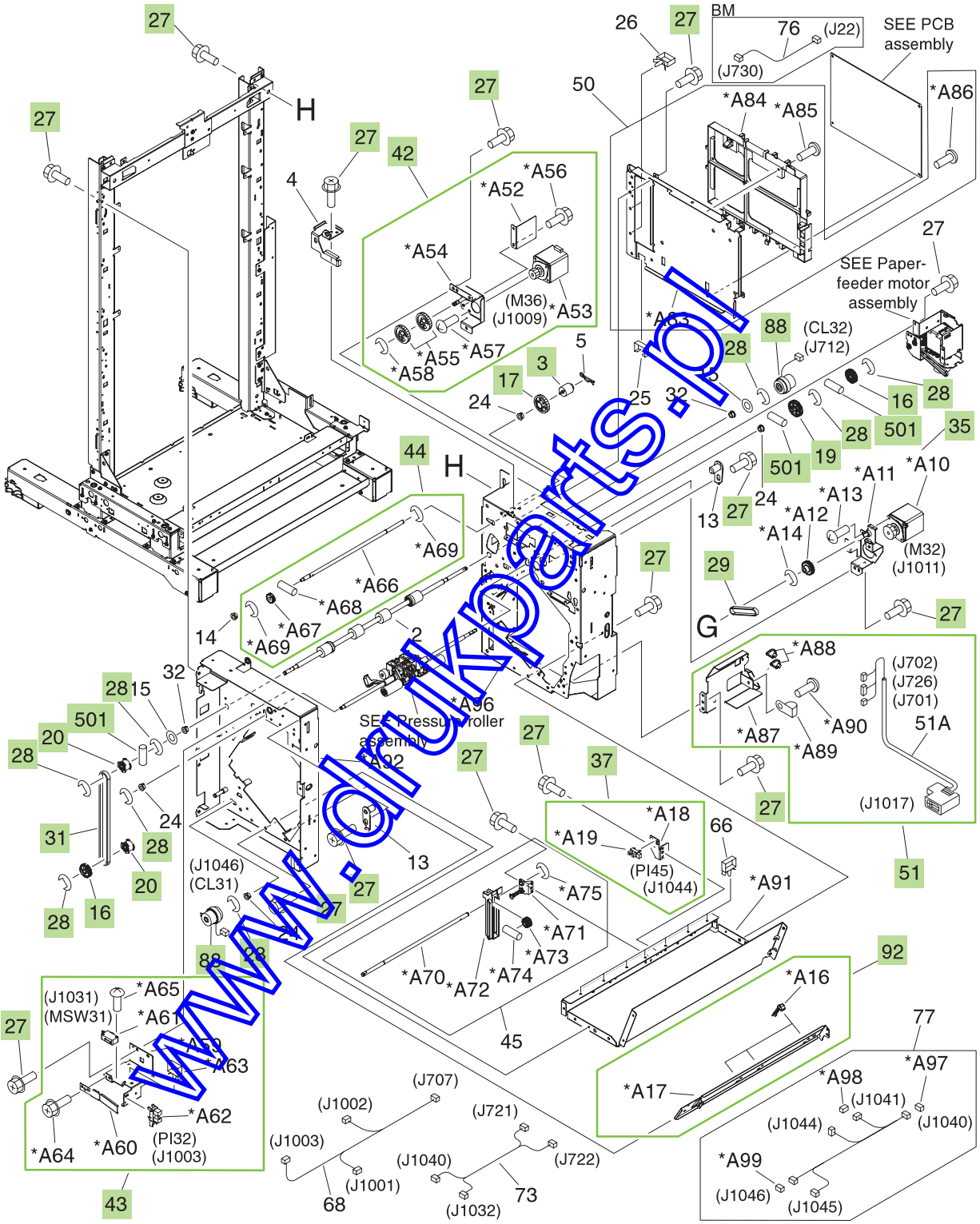

www.drukparts.pl

Figure 9-44 Finisher main body (5 of 5) (stapler/stacker and booklet-maker)

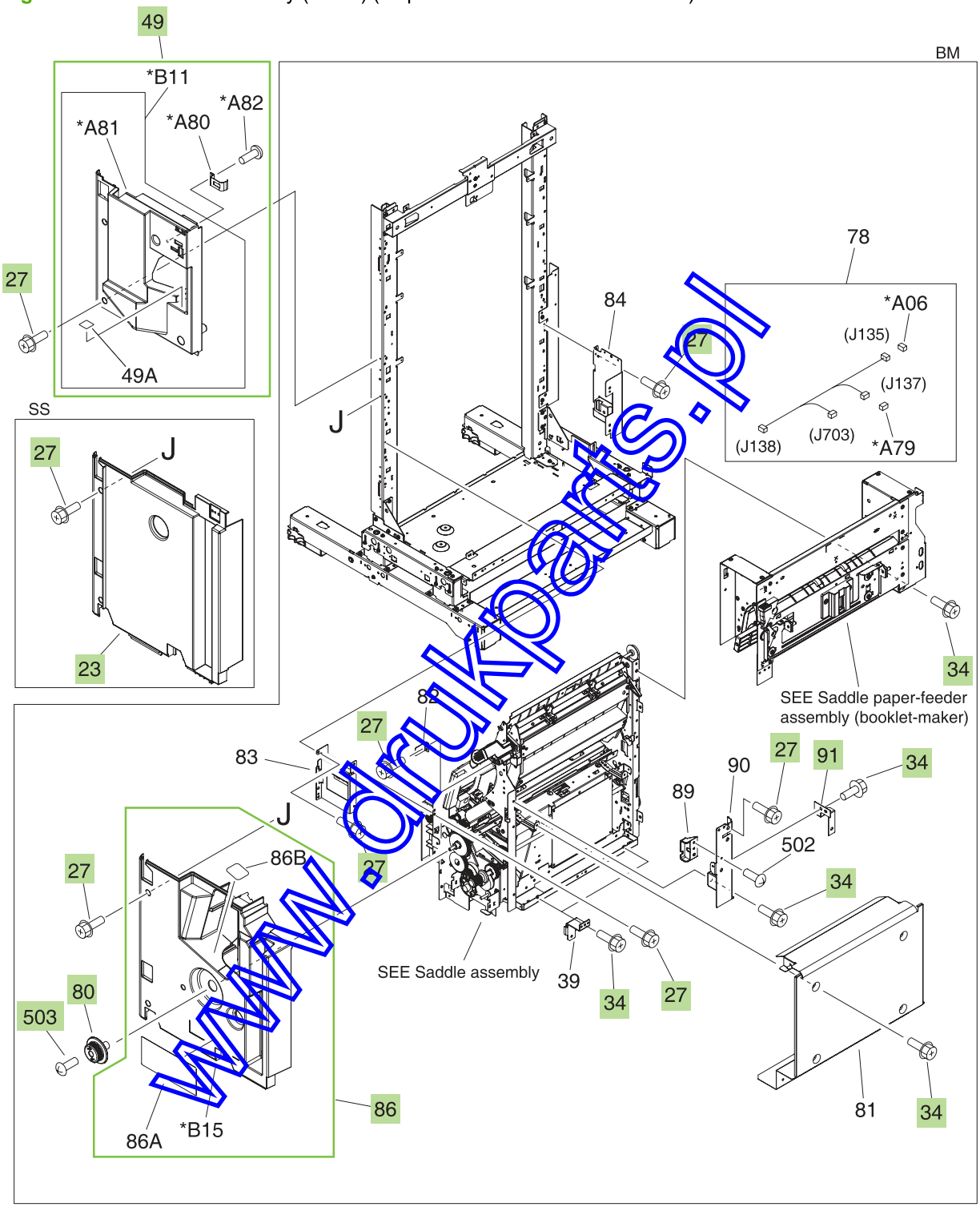

www.drukparts.pl

Table 9-35 Finisher main body (stapler/stacker and booklet-maker)

Ref	Description	Part number	Qty
3	Limiter, torque	FC5-3657-000CN	1
8	Hinge, front-door, 1	FC5-4991-030CN	2
9	Hinge, front-door, 2	FC5-4992-030CN	1
10	Rack, rail	FC5-5436-000CN	4
16	Gear, 30T	FU5-0428-000CN	2
17	Gear, 40T	FU5-0454-000CN	1
19	Gear, 29T	FU5-2399-000CN	1
20	Pulley, 20T	FU5-3086-000CN	2
21	Screw, RS stepped, M3	FU9-9050-000CN	8
23	Cover, internal, lower (stapler/stacker only)	RC2-1351-000CN	1
27	Screw, RS, M3x8	XA9-1386-000CN	83
28	Ring, E	XD9-0136-000CN	10
29	Belt, timing, cogged	XF2-1607-860CN	1
30	Belt, timing	XF2-1608-840CN	1
31	Belt, timing, cogged	XF9-0748-000CN	1
33	Upper-cover lock assembly	4G3-0210-000CN	1
34	Screw, RS, M4x8 (booklet-maker only)	XA9-0732-000CN	18
35	Stack-ejection motor assembly	4G3-0769-000CN	1
36	Cable, solenoid	FG3-2892-000CN	1
37	Shutter H.P.-sensor assembly	FM2-1401-000CN	1
38	Upper-crossmember assembly	RM1-4180-000CN	1
42	Press-motor assembly	FM2-1409-000CN	1
43	Sensor/switch assembly	FM2-1417-000CN	1
44	Swing-press shaft assembly	FM2-1423-000CN	1
46	Area-sensor flag assembly	RM1-4107-000CN	1
47	Caster, universal	RC2-1315-000CN	4
48	Screw, with washer, M5x12	XA9-0912-000CN	12
49	Inner-cover assembly	RM1-4123-000CN	1
51	Cable-mount lattice assembly	RM1-4128-000CN	1
59	Sheet, entrance-guide	FC5-5542-000CN	2
60	Solenoid	FL2-0821-000CN	1
69	Pin, dowel	XD3-2200-102CN	1
70	Pin, dowel	XD3-2200-142CN	1
71	Ring, E	XD9-0136-000CN	5

www.drukparts.pl

Table 9-35 Finisher main body (stapler/stacker and booklet-maker) (continued)

Ref	Description	Part number	Qty
75	Entrance-sensor flag assembly	FM2-0718-000CN	1
79	Plate, hinge-stop (booklet-maker only)	4A3-4715-000CN	1
80	Knob (booklet-maker only)	FB3-7881-000CN	1
86	Cover, internal, lower (booklet-maker only)	RL1-1477-000CN	1
87	Plate, grounding (booklet-maker only)	4A3-1955-000CN	1
88	Clutch, electromagnetic	4H3-0370-000CN	2
91	Plate, grounding (booklet-maker only)	RC2-1536-000CN	1
92	Flexible-cable mount assembly	FM2-0720-000CN	1
501	Pin	XD3-2200-[illegible]CN	4
503	Screw, TP, M3x6 (booklet-maker only)	XB6-7300-[illegible]CN	1
A51	Photo interrupter, TLP1242	WG8-5593-000CN	1

NOTE: Only highlighted parts are orderable.

www.drukparts.pl

Figure 9-45 Output bin 1 (stack upper-tray assembly) (1 of 2) (stapler/stacker)

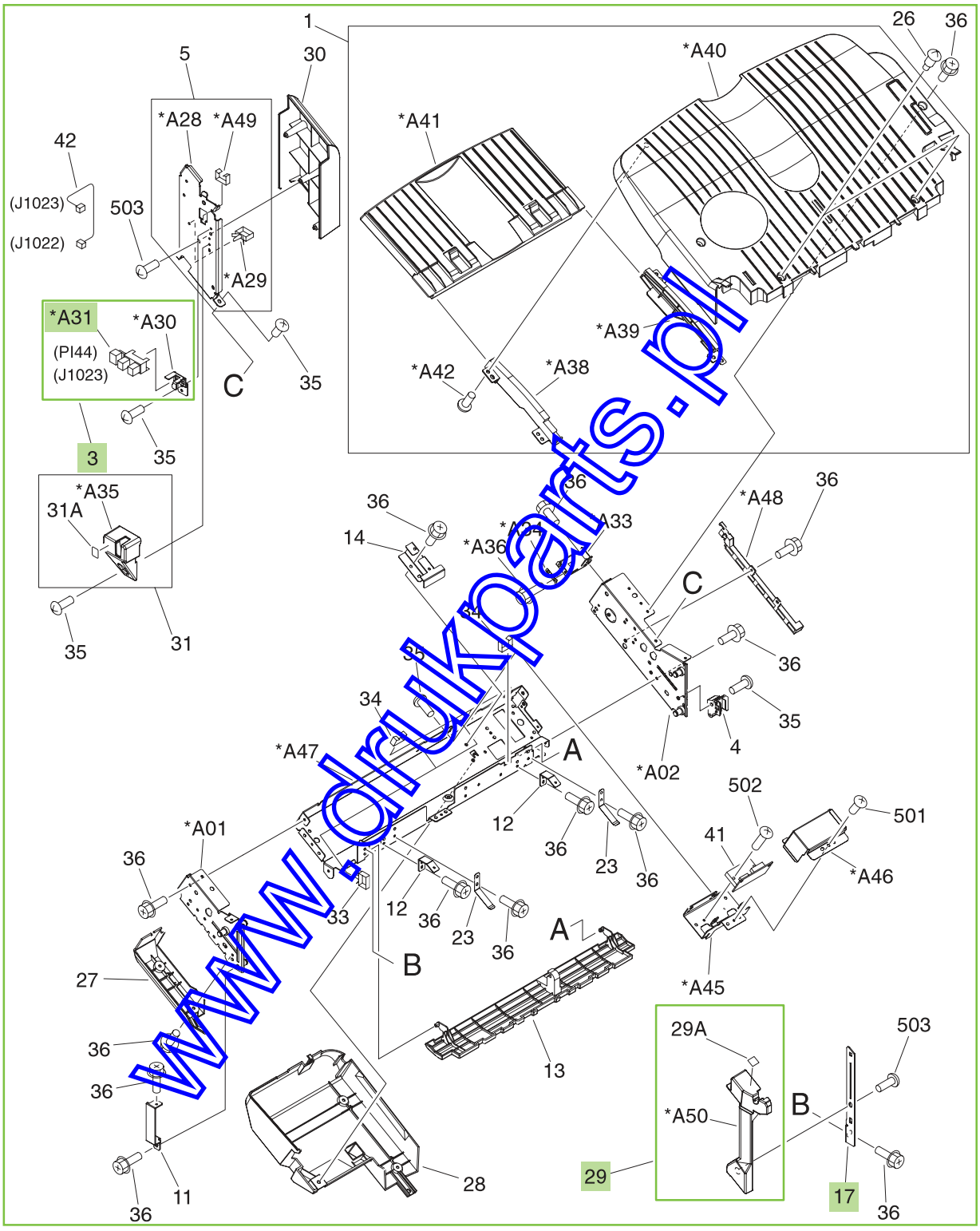

www.drukparts.pl

Figure 9-46 Output bin 1 (stack upper-tray assembly) (2 of 2) (stapler/stacker)

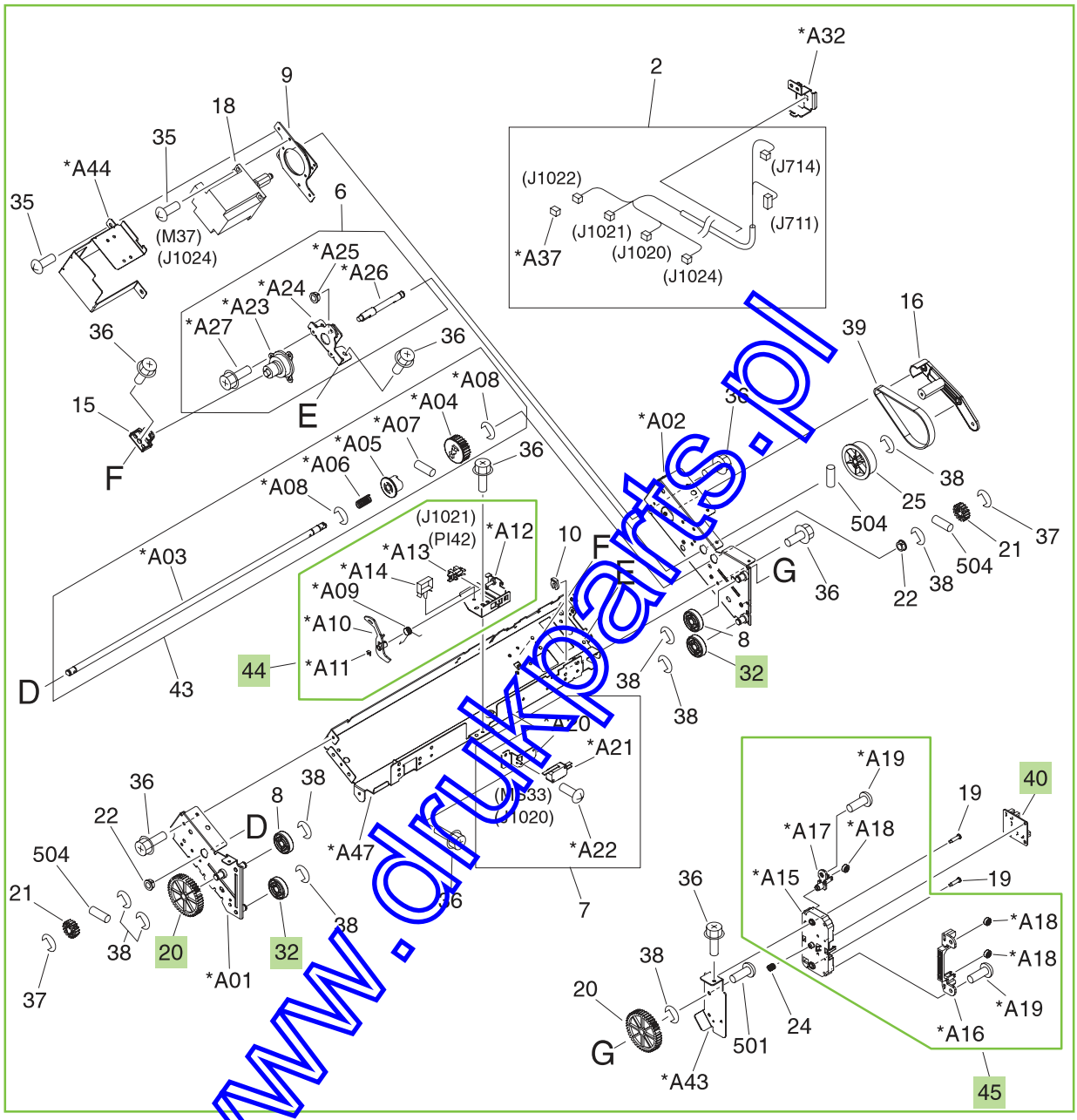

www.drukparts.pl

Table 9-36 Output bin 1 (stack upper-tray assembly) (stapler/stacker)

Ref	Description	Part number	Qty
All	Stack upper-tray assembly	RM1-4101-000CN	1
3	Option-sensor assembly	FM2-1708-000CN	1
17	Plate, option-tray, front	FC5-6978-000CN	1
20	Gear, 44T	FU5-0435-000CN	2
29	Cover, option-tray, front	RL1-2210-000CN	1
32	Roller, tray-guide	RU5-6035-000CN	2
40	Area-sensor PCA assembly	4G1-1498-000CN	1
44	Paper-sensor assembly	FM2-0707-000CN	1
45	Area-sensor holder assembly	FM2-0709-000CN	1
A31	Photo interrupter, TLP1242	WG8-5593-000CN	1

NOTE: Only highlighted parts are orderable.

www.drukparts.pl

Figure 9-47 Output bin 1 (stack upper-tray assembly) (1 of 2) (booklet-maker)

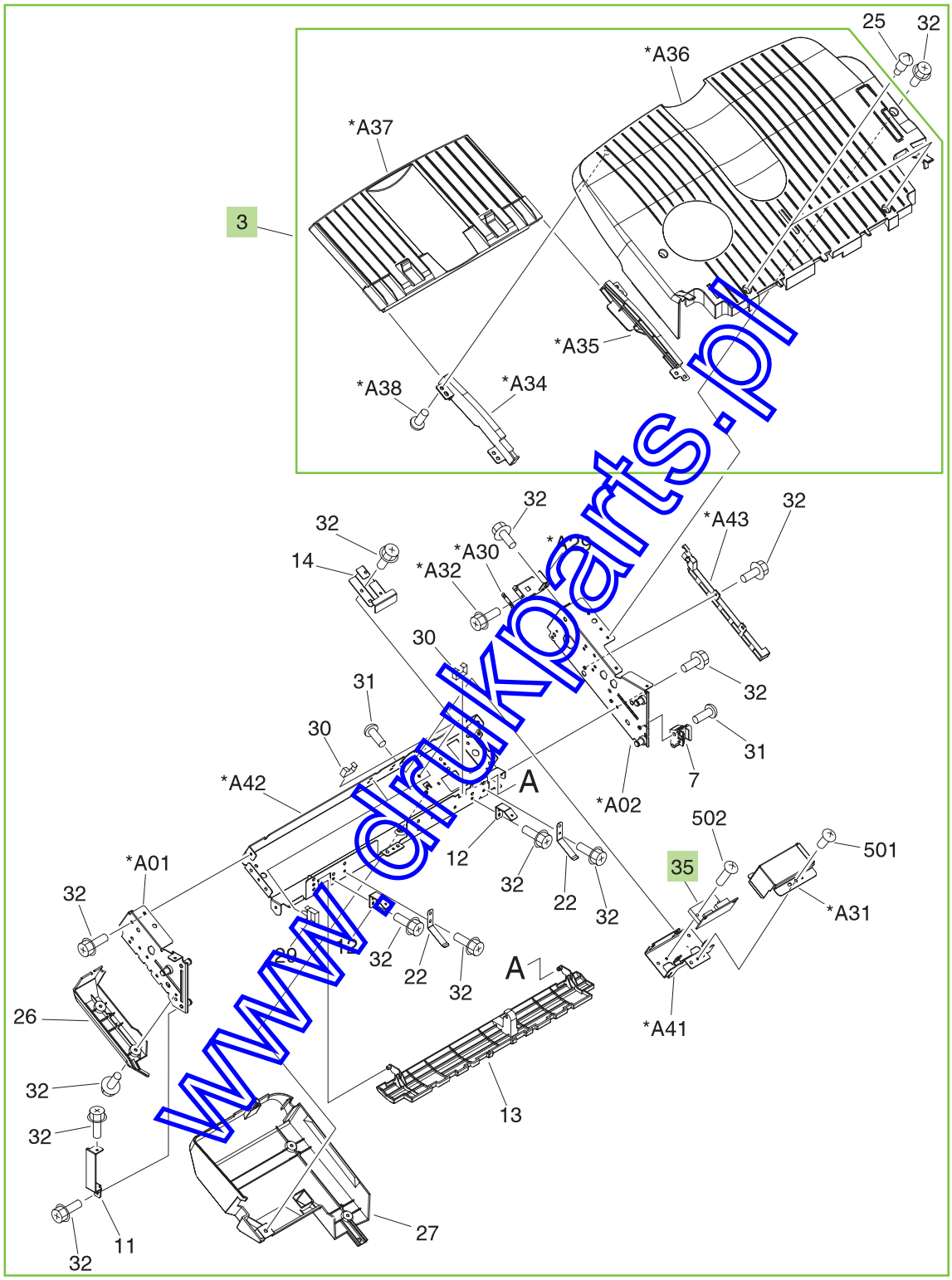

www.drukparts.pl

www.drukparts.pl

Figure 9-48 Output bin 1 (stack upper-tray assembly) (2 of 2) (booklet-maker)

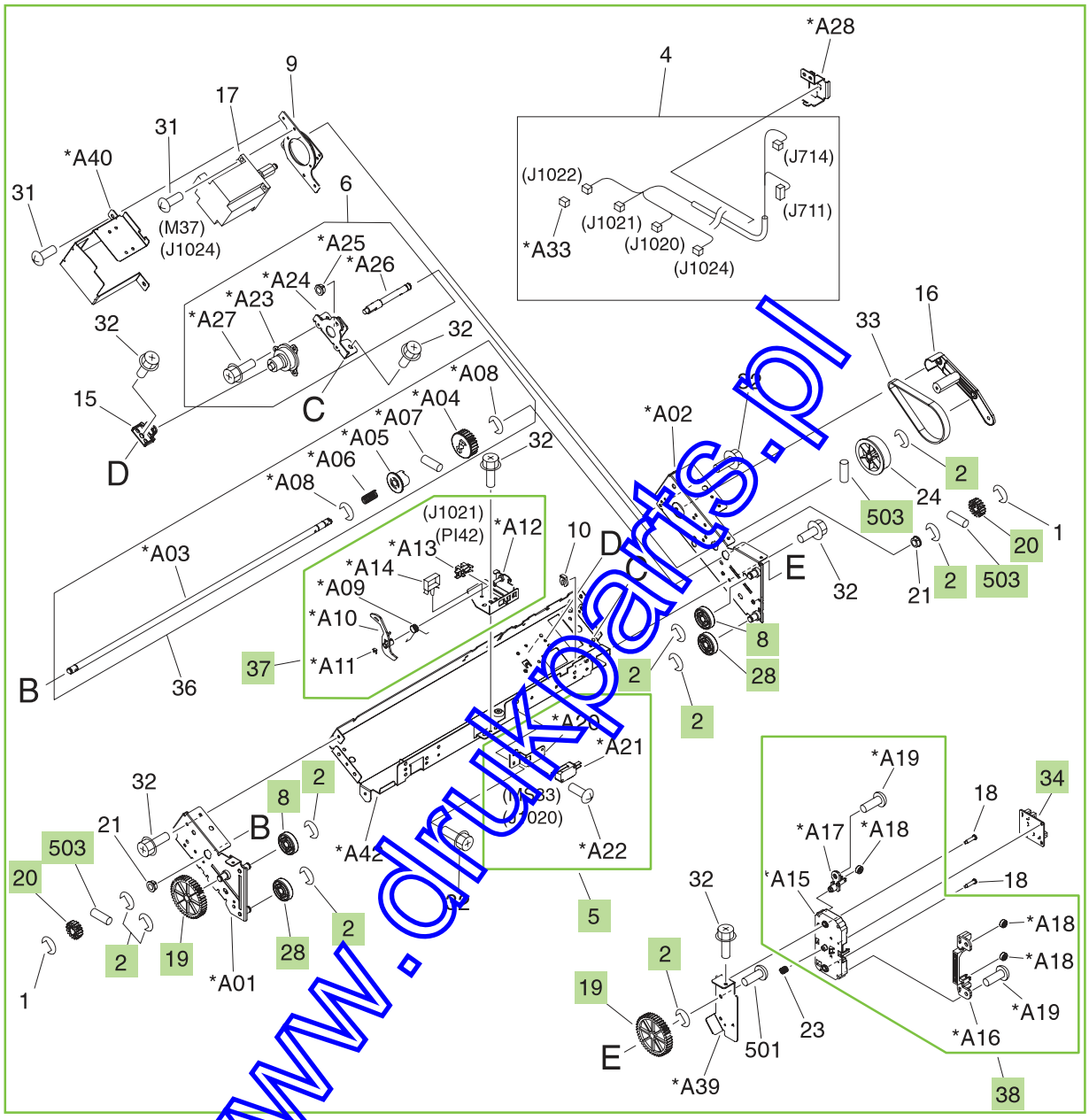

www.dukparts.pl

Table 9-37 Output bin 1 (stack upper-tray assembly) (booklet-maker)

Ref	Description	Part number	Qty
All	Stack upper-tray assembly	RM1-4102-000CN	1
2	Ring, E	XD9-0137-000CN	9
3	Stack-tray assembly	RM1-4104-000CN	1
5	Approach-switch assembly	FM2-0710-000CN	1
8	Roller, tray-guide	FC5-4221-000CN	2
19	Gear, 44T	FU5-0435-000CN	2
20	Gear, 17T	FU5-0457-000CN	2
28	Roller, tray-guide	RU5-6035-000CN	2
34	Area-sensor PCA assembly	4G1-1498-000CN	1
35	Tray-driver PCA assembly	FG3-2887-000CN	1
37	Paper-sensor assembly	FM2-0707-000CN	1
38	Area-sensor holder assembly	FM2-0709-000CN	1
503	Pin, dowel	XD3-2300-142CN	3

NOTE: Only highlighted parts are orderable.

www.drukparts.pl

Figure 9-49 Output bin 2 (stack lower-tray assembly) (1 of 2) (stapler/stacker and booklet-maker)

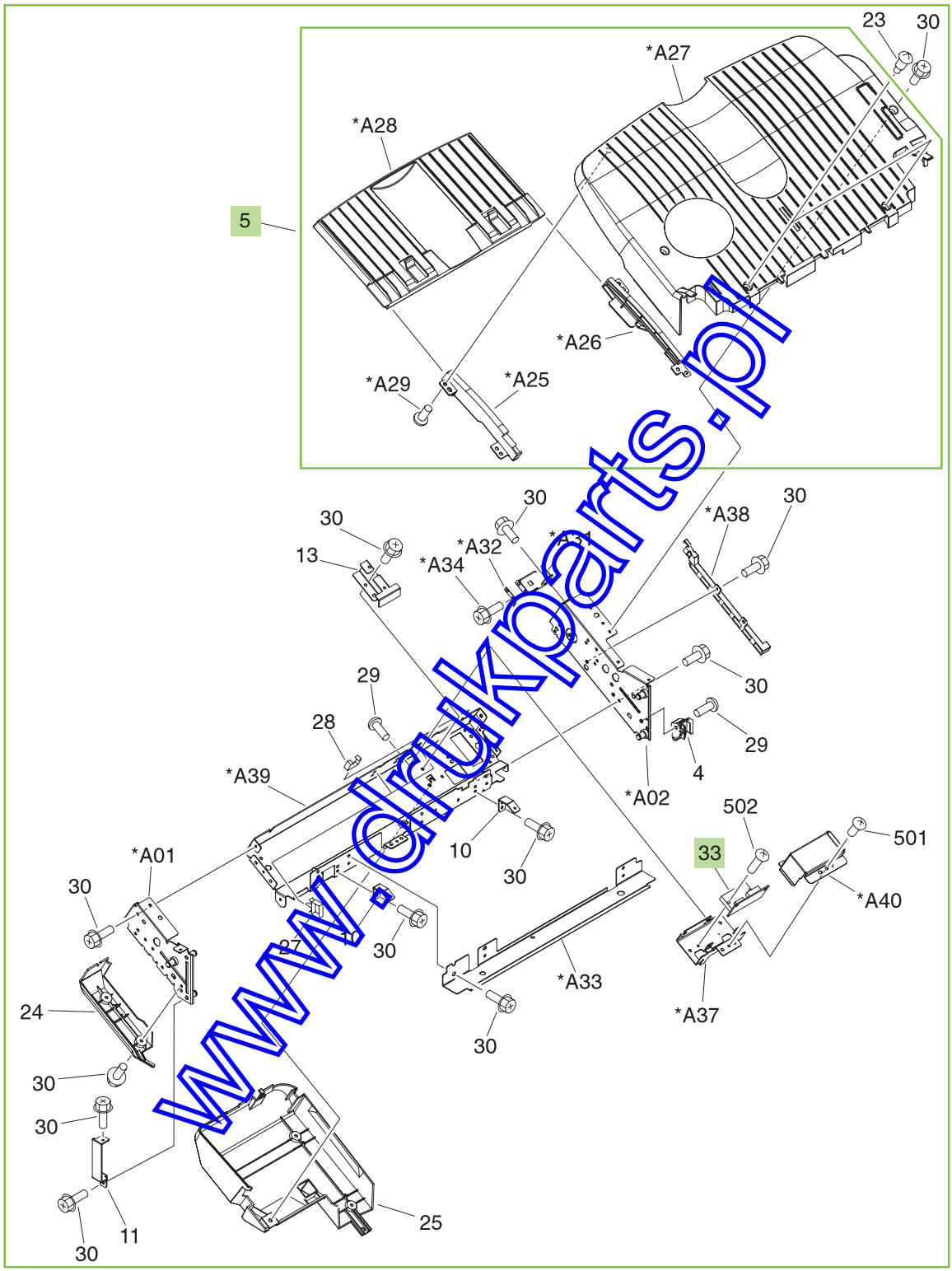

www.drukparts.pl

www.drukparts.pl

Figure 9-50 Output bin 2 (stack lower-tray assembly) (2 of 2) (stapler/stacker and booklet-maker)

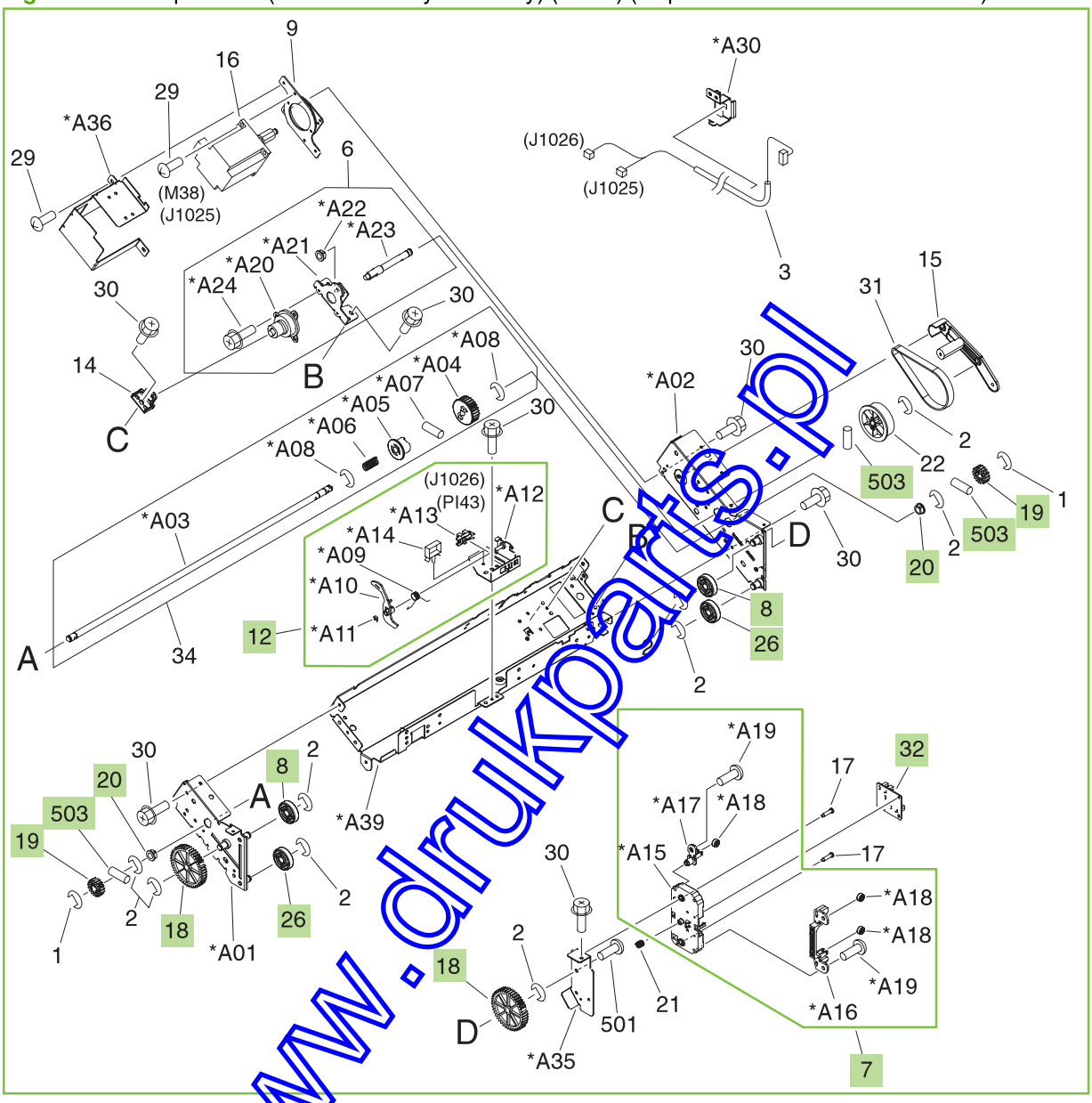

www.drukparts.pl

Table 9-38 Output bin 2 (stack lower-tray assembly) (stapler/stacker and booklet-maker)

Ref	Description	Part number	Qty
All	Stack lower-tray assembly	RM1-4105-000CN	1
5	Stack-tray assembly	RM1-4104-000CN	1
7	Area-sensor holder assembly	FM2-0709-000CN	1
8	Roller, tray-guide	FC5-4221-000CN	2
12	Paper-sensor assembly	FM2-0707-000CN	1
18	Gear, 44T	FU5-0435-000CN	2
19	Gear, 17T	FU5-0457-000CN	2
20	Bushing	FU5-1169-000CN	2
26	Roller, tray-guide	RU5-6035-000CN	2
32	Area-sensor PCA assembly	4G1-1498-000CN	1
33	Tray-driver PCA assembly	FG3-2887-000CN	1
503	Pin, dowel	XD3-2900-142CN	3

NOTE: Only highlighted parts are orderable.

www.drukparts.pl

Figure 9-51 Top output bin (stack sub-tray assembly) (stapler/stacker)

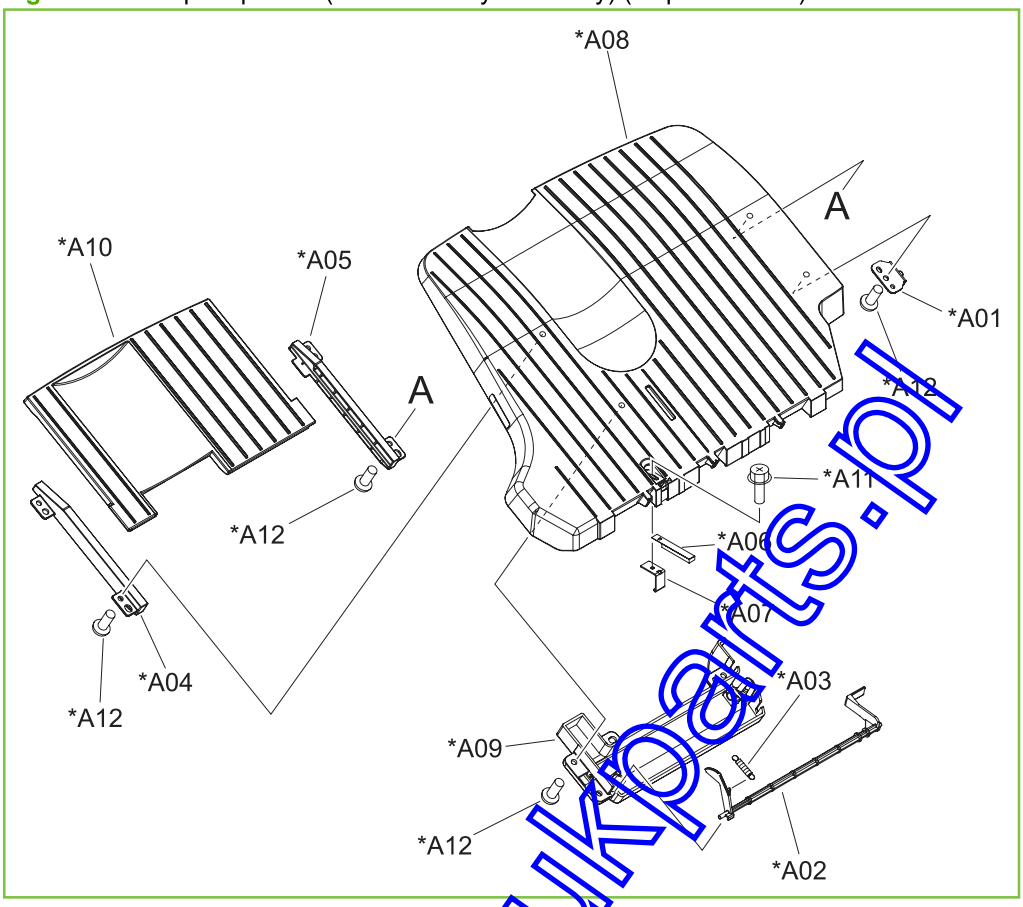

www.drukparts.pl

Table 9-39 Top output bin (stack sub-tray assembly) (stapler/stacker)

Ref	Description	Part number	Qty
All	Stack sub-tray assembly	RM1-4115-000CN	1

NOTE: Only highlighted parts are orderable.

Figure 9-52 Operation-tray assembly (1 of 2) (stapler/stacker and booklet-maker)

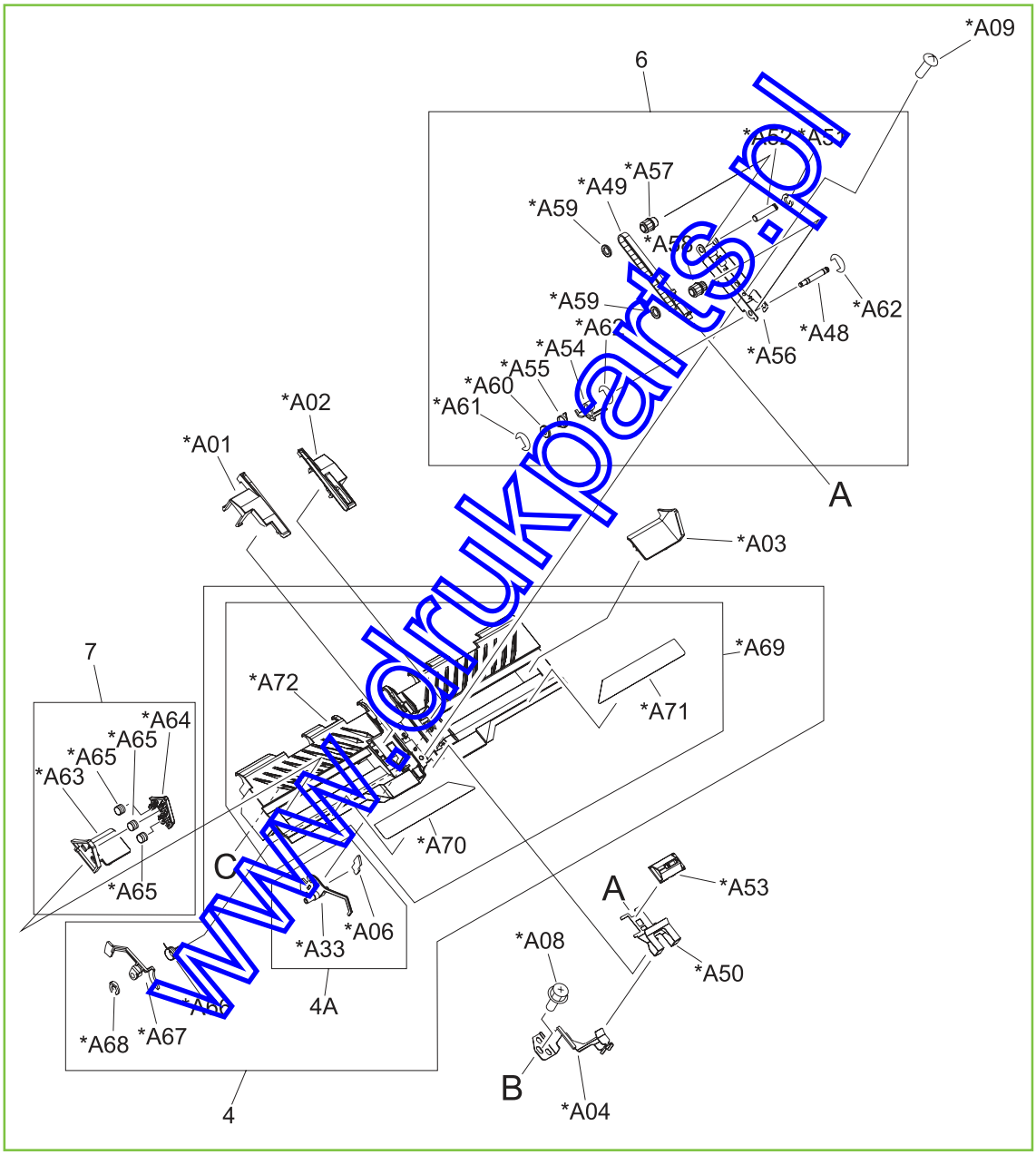

www.drukparts.pl

Figure 9-53 Operation-tray assembly (2 of 2) (stapler/stacker and booklet-maker)

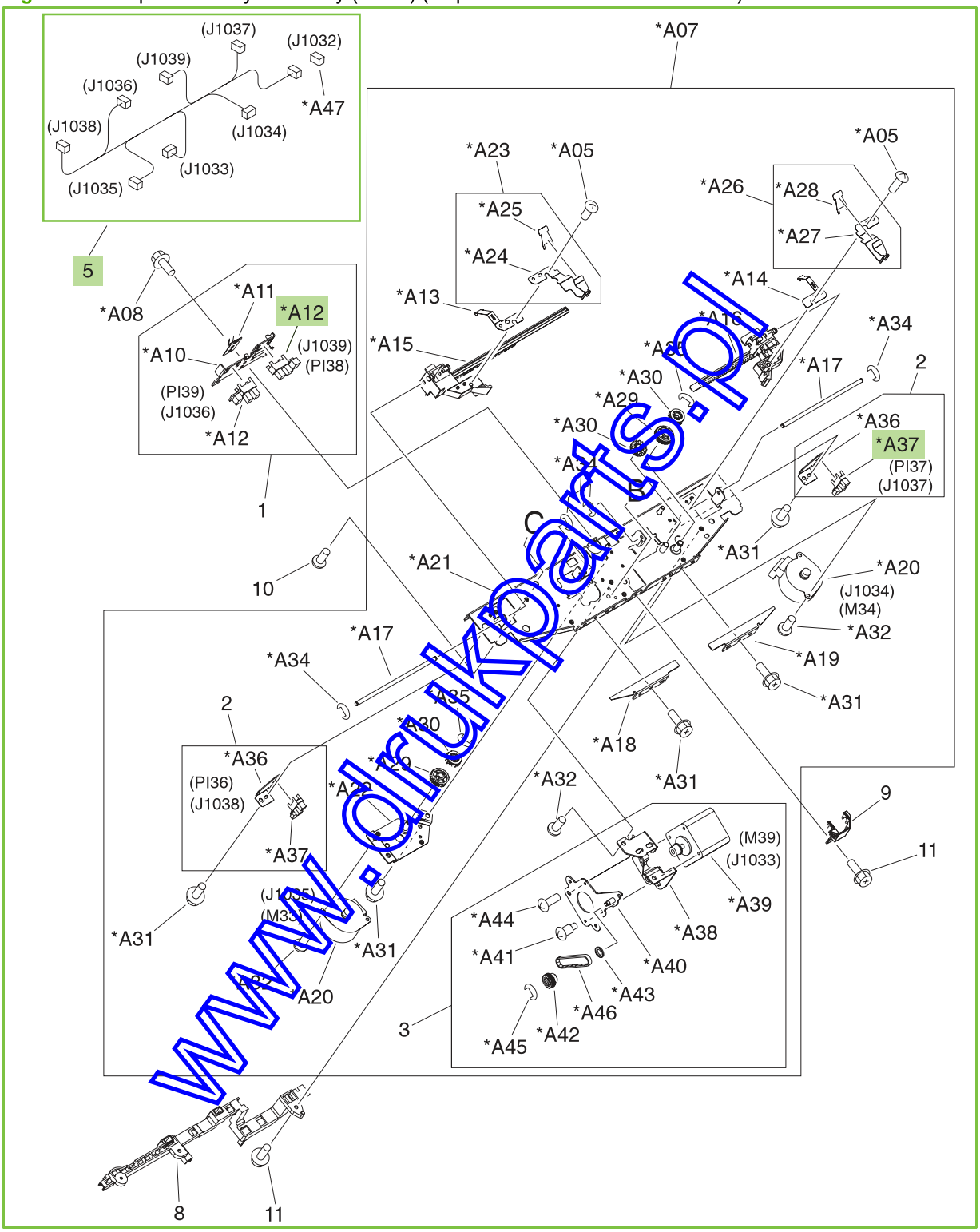

www.drukparts.pl

Table 9-40 Operation-tray assembly (stapler/stacker and booklet-maker)

Ref	Description	Part number	Qty
All	Operation-tray assembly	RM1-4125-000CN	1
5	Cable, operation-tray	FG3-2903-000CN	1
A12	Photo interrupter, TLP1242	WG8-5593-000CN	2
A37	Photo interrupter, TLP1242	WG8-5593-000CN	1

NOTE: Only highlighted parts are orderable.

www.drukparts.pl

Figure 9-54 Paper-feeder motor assembly (stapler/stacker and booklet-maker)

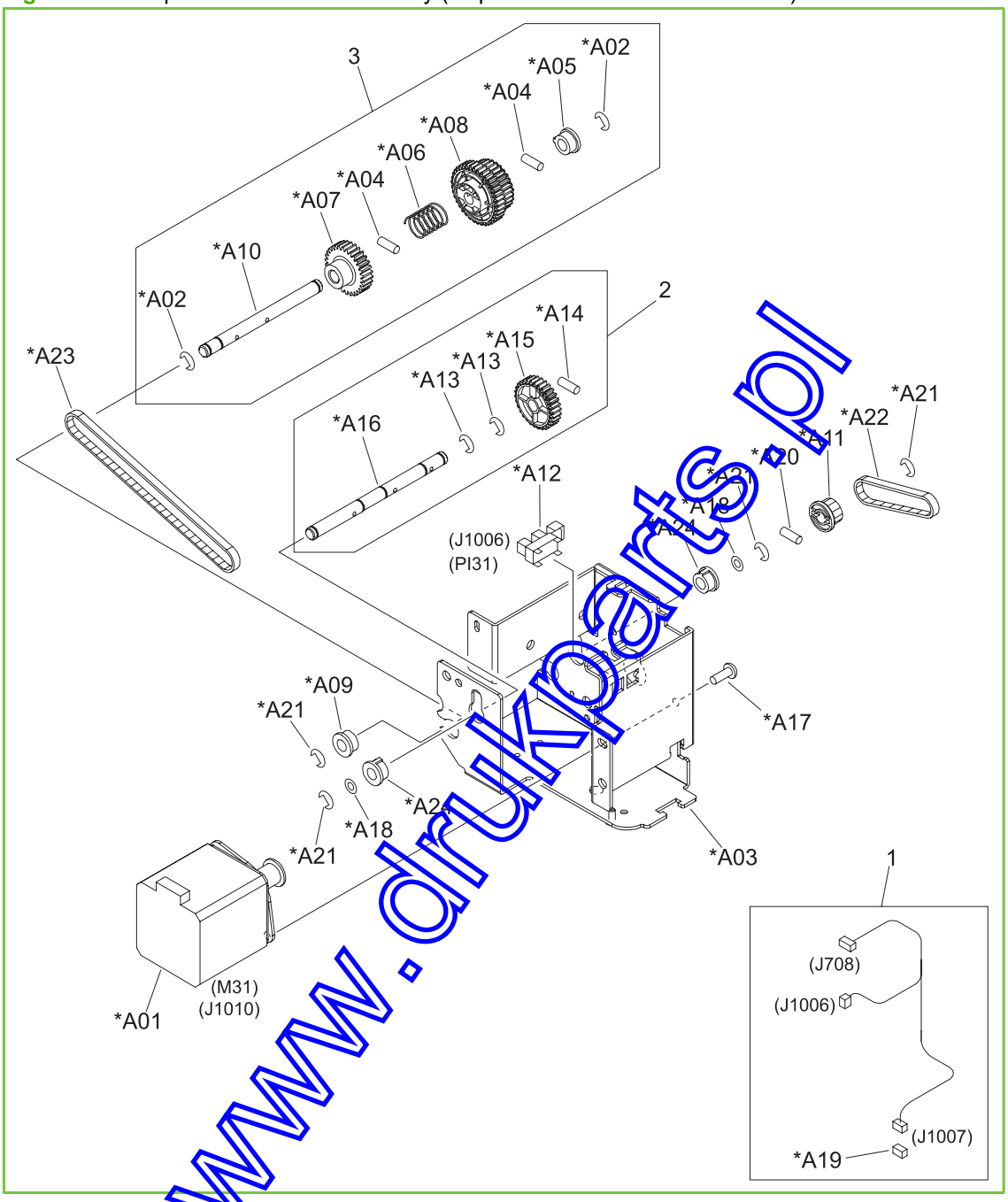

www.drukparts.pl

Table 9-41 Paper-feeder motor assembly (stapler/stacker and booklet-maker)

Ref	Description	Part number	Qty
All	Paper-feeder motor assembly	RM1-4175-000CN	1

NOTE: Only highlighted parts are orderable.

www.drukparts.pl

Figure 9-55 Return-roller assembly (stapler/stacker and booklet-maker)

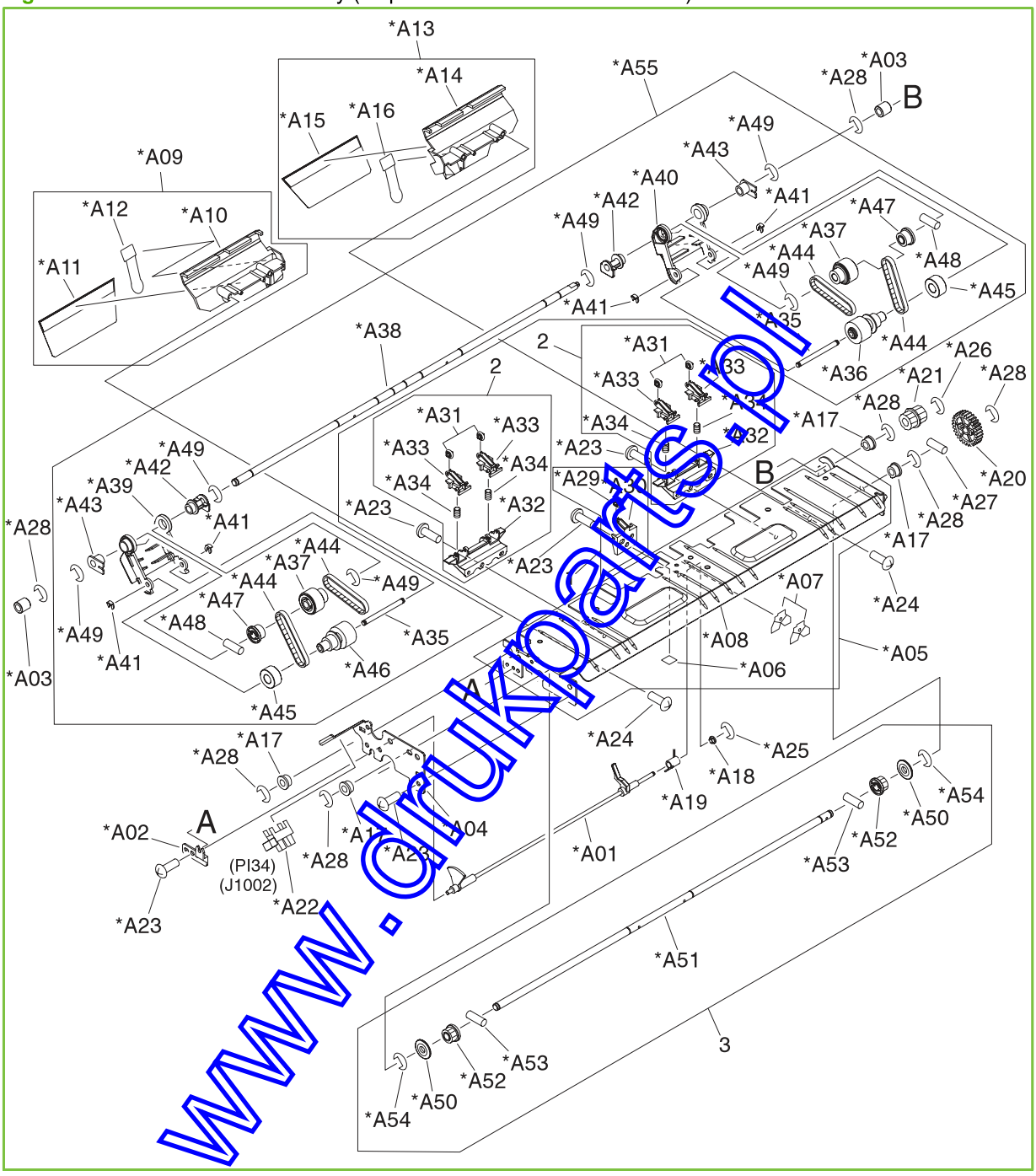

www.drukarki.pl

Table 9-42 Return-roller assembly (stapler/stacker and booklet-maker)

Ref	Description	Part number	Qty
All	Return-roller assembly	FM2-0725-090CN	1

NOTE: Only highlighted parts are orderable.

www.drukparts.pl

Figure 9-56 Pressure-roller assembly (stapler/stacker and booklet-maker)

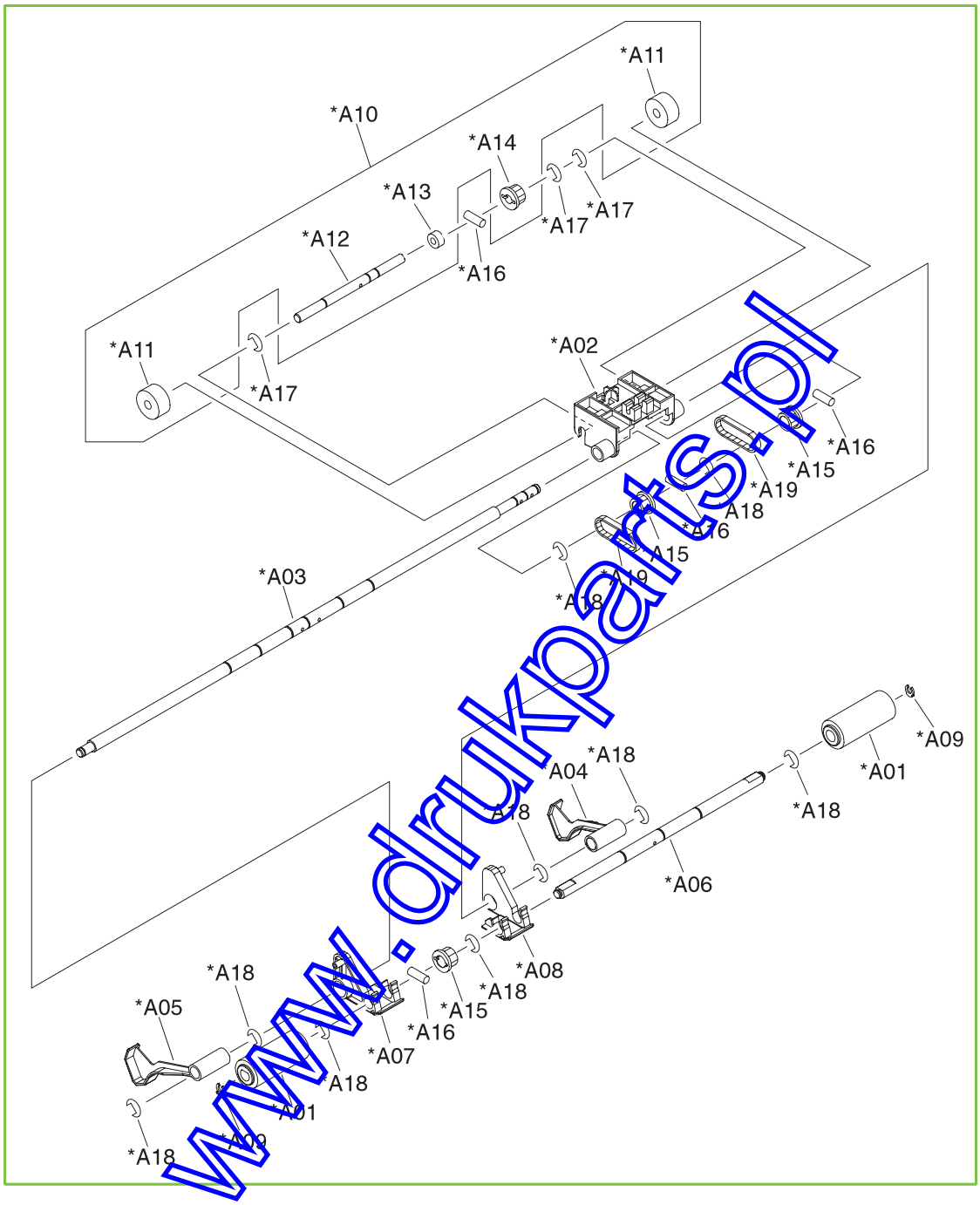

www.drukparts.pl

Table 9-43 Pressure-roller assembly (stapler/stacker and booklet-maker)

Ref	Description	Part number	Qty
All	Pressure-roller assembly	FM2-0730-000CN	1

NOTE: Only highlighted parts are orderable.

www.drukparts.pl

Figure 9-57 Swing-guide assembly (stapler/stacker and booklet-maker)

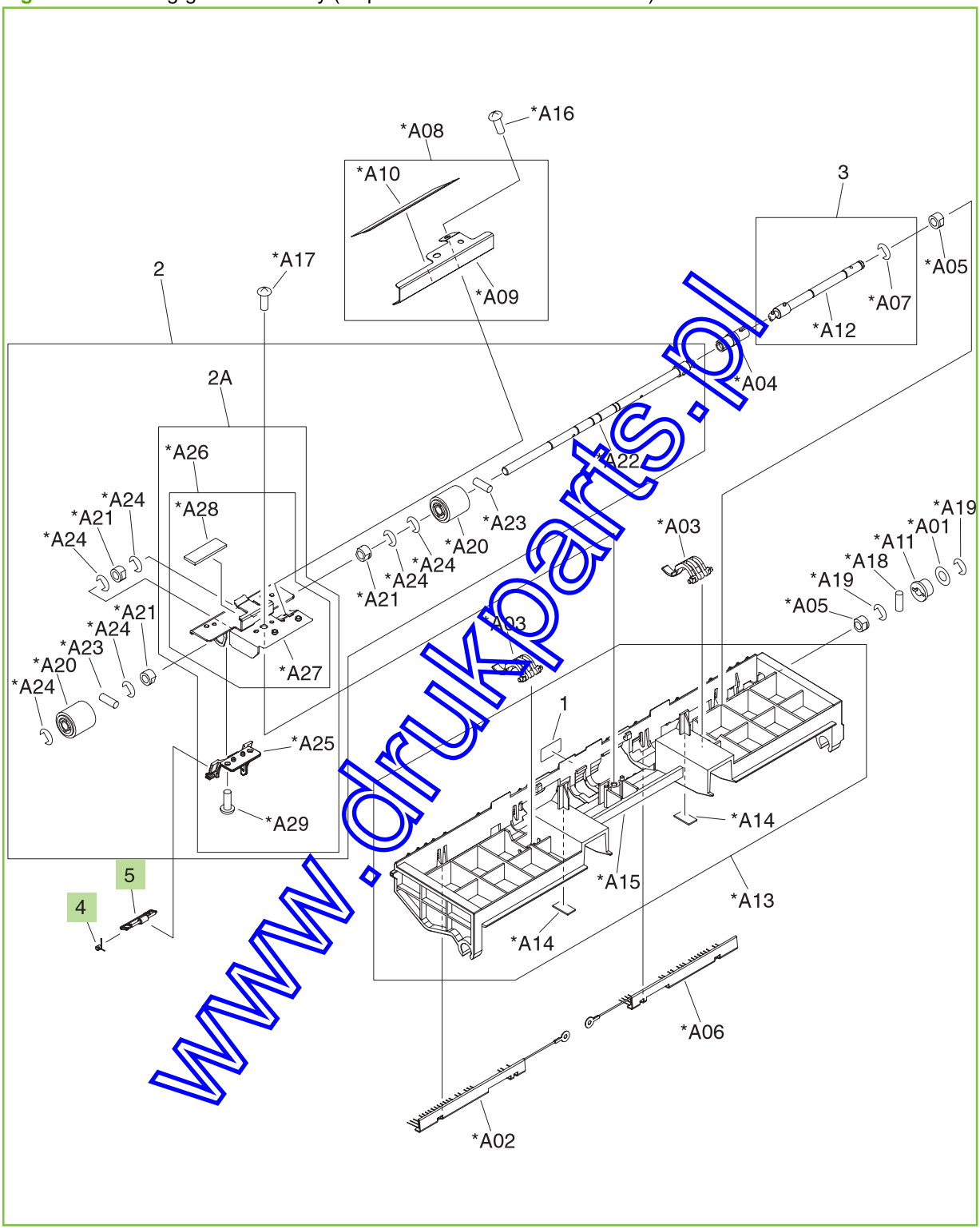

www.drukparts.pl

Table 9-44 Swing-guide assembly (stapler/stacker and booklet-maker)

Ref	Description	Part number	Qty
All	Swing-guide assembly	RM1-4108-000CN	1
4	Spring, torsion	FC5-6857-000CN	1
5	Arm, paper-delivery gate	RC2-1293-000CN	1

NOTE: Only highlighted parts are orderable.

www.drukparts.pl

Figure 9-58 Entrance upper-guide assembly (stapler/stacker and booklet-maker)

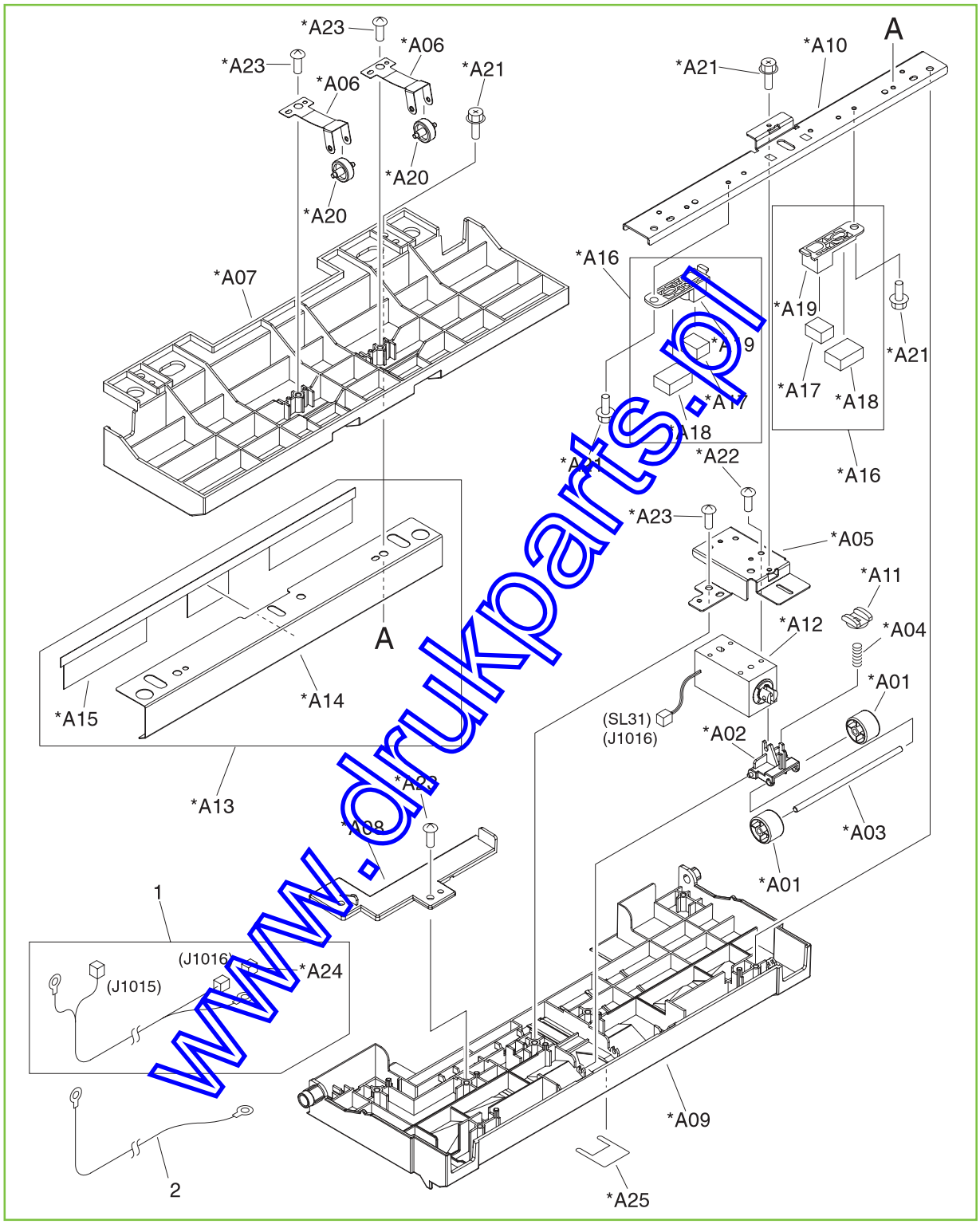

www.drukparts.pl

Table 9-45 Entrance upper-guide assembly (stapler/stacker and booklet-maker)

Ref	Description	Part number	Qty
All	Entrance upper-guide assembly	RM1-4172-000CN	1

NOTE: Only highlighted parts are orderable.

www.drukparts.pl

Figure 9-59 Staple assembly (stapler/stacker and booklet-maker)

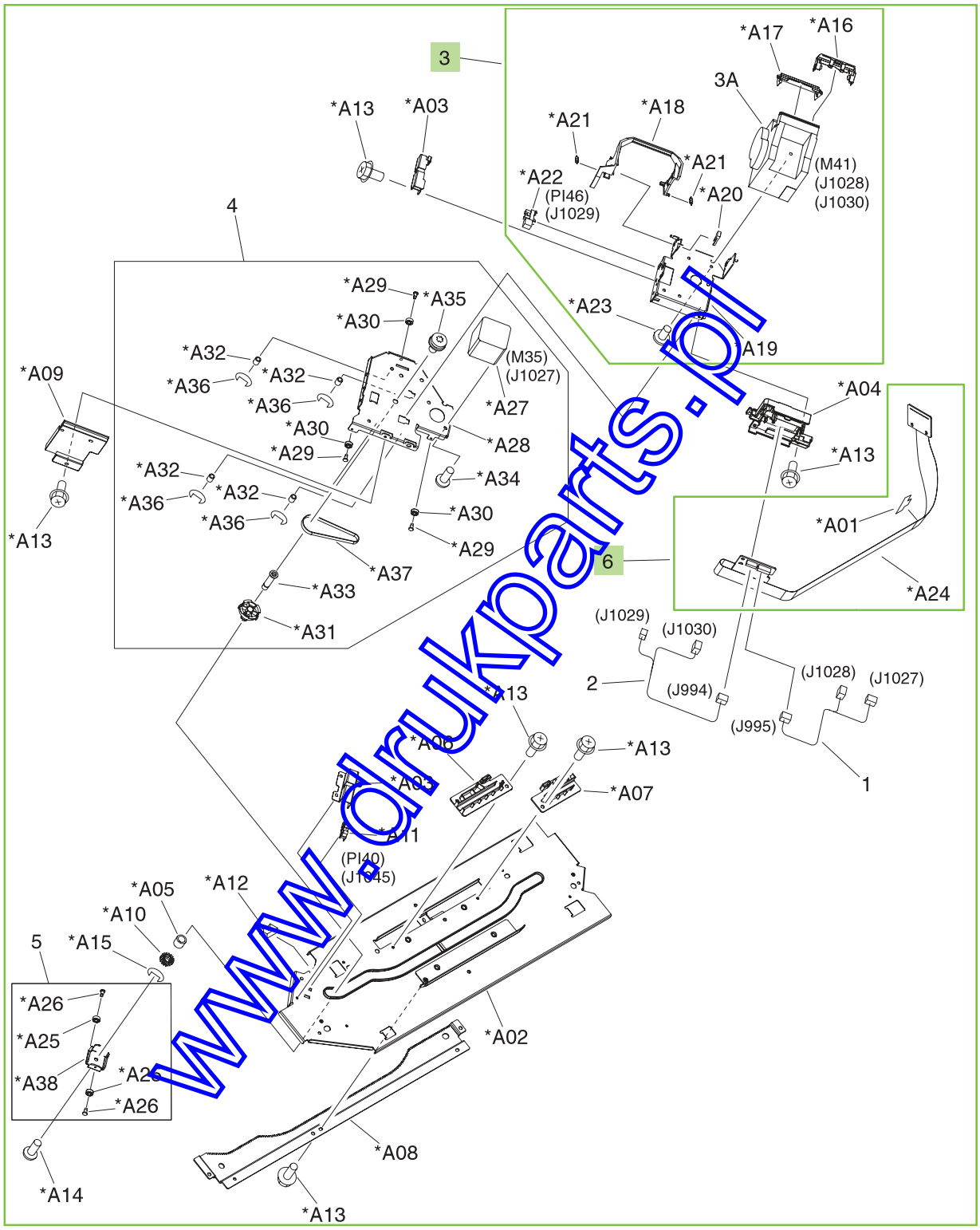

www.drukparts.pl

Table 9-46 Staple assembly (stapler/stacker and booklet-maker)

Ref	Description	Part number	Qty
All	Staple assembly	FM2-0721-000CN	1
3	Stapler sub-assembly	FM2-0722-000CN	1
	5000-staple replacement cartridge	C8091-67901	1
	2000-staple cartridge (for booklet making)	CC383-67901	1
6	Cable, staple-connecting assembly	4G3-1777-000CN	1

NOTE: Only highlighted parts are orderable.

www.drukparts.pl

Figure 9-60 Saddle assembly (1 of 4) (booklet-maker)

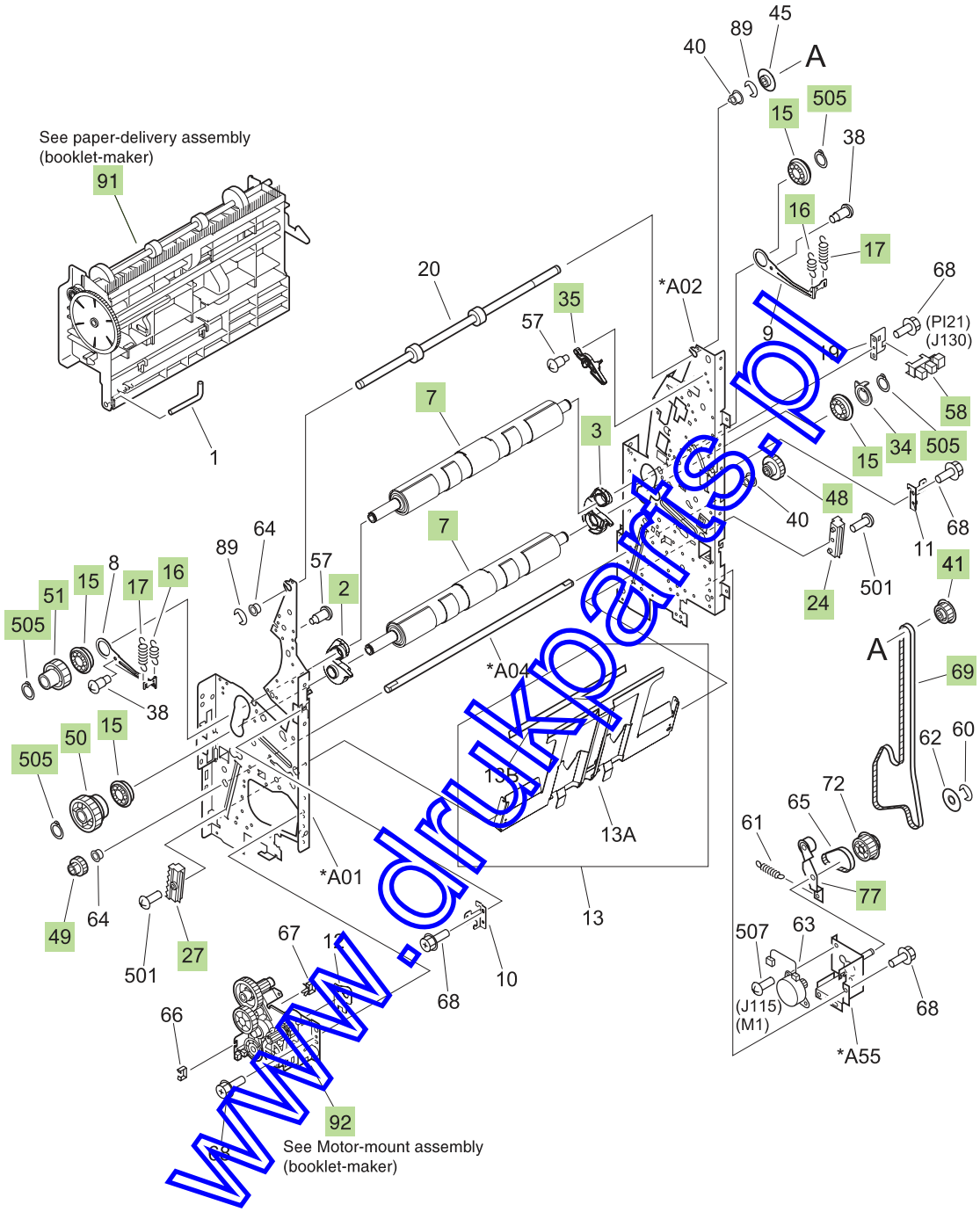

www.drukoarts.pl

Figure 9-61 Saddle assembly (2 of 4) (booklet-maker)

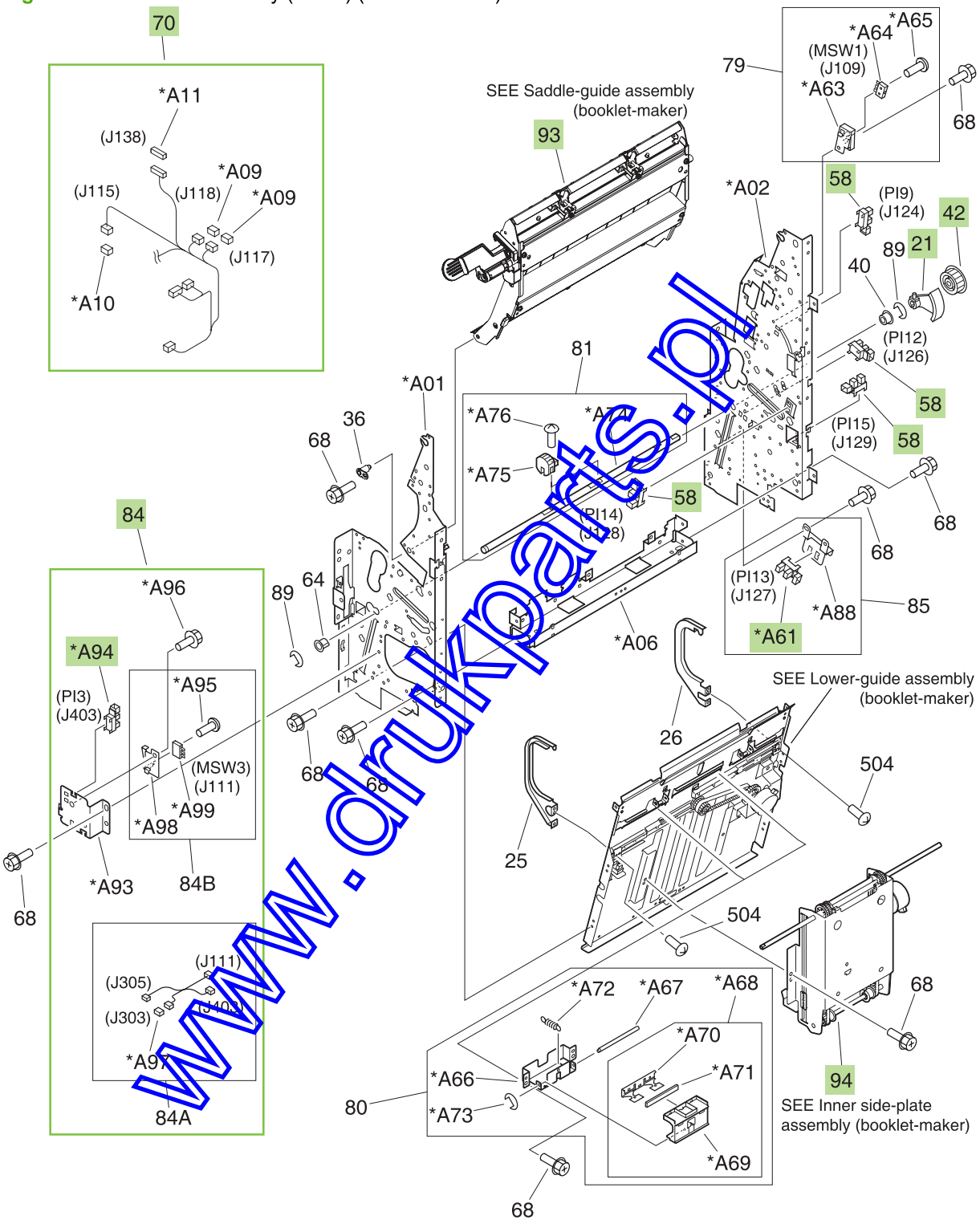

www.drukparts.pl

Figure 9-62 Saddle assembly (3 of 4) (booklet-maker)

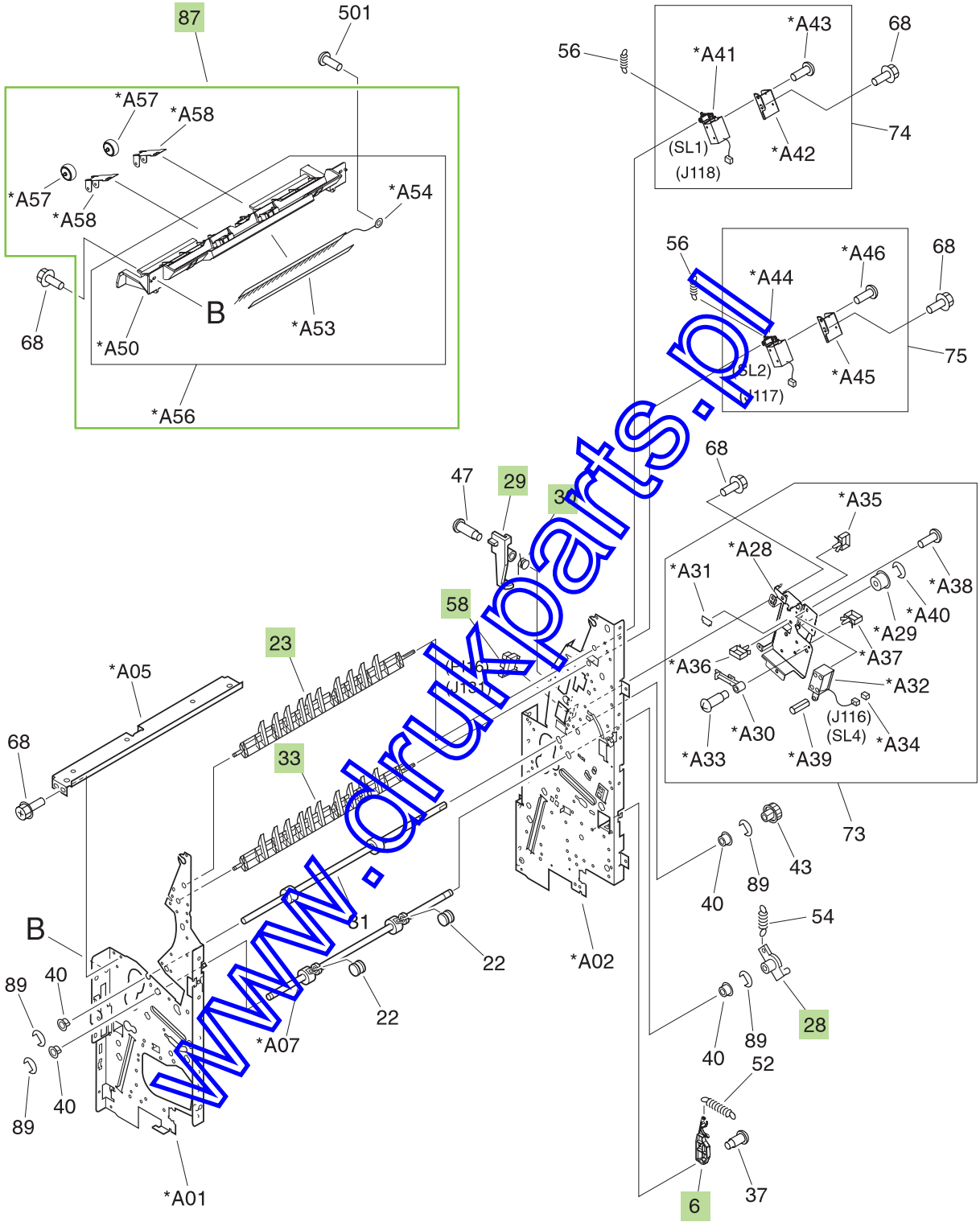

www.drukparts.pl

www.drukparts.pl

Figure 9-63 Saddle assembly (4 of 4) (booklet-maker)

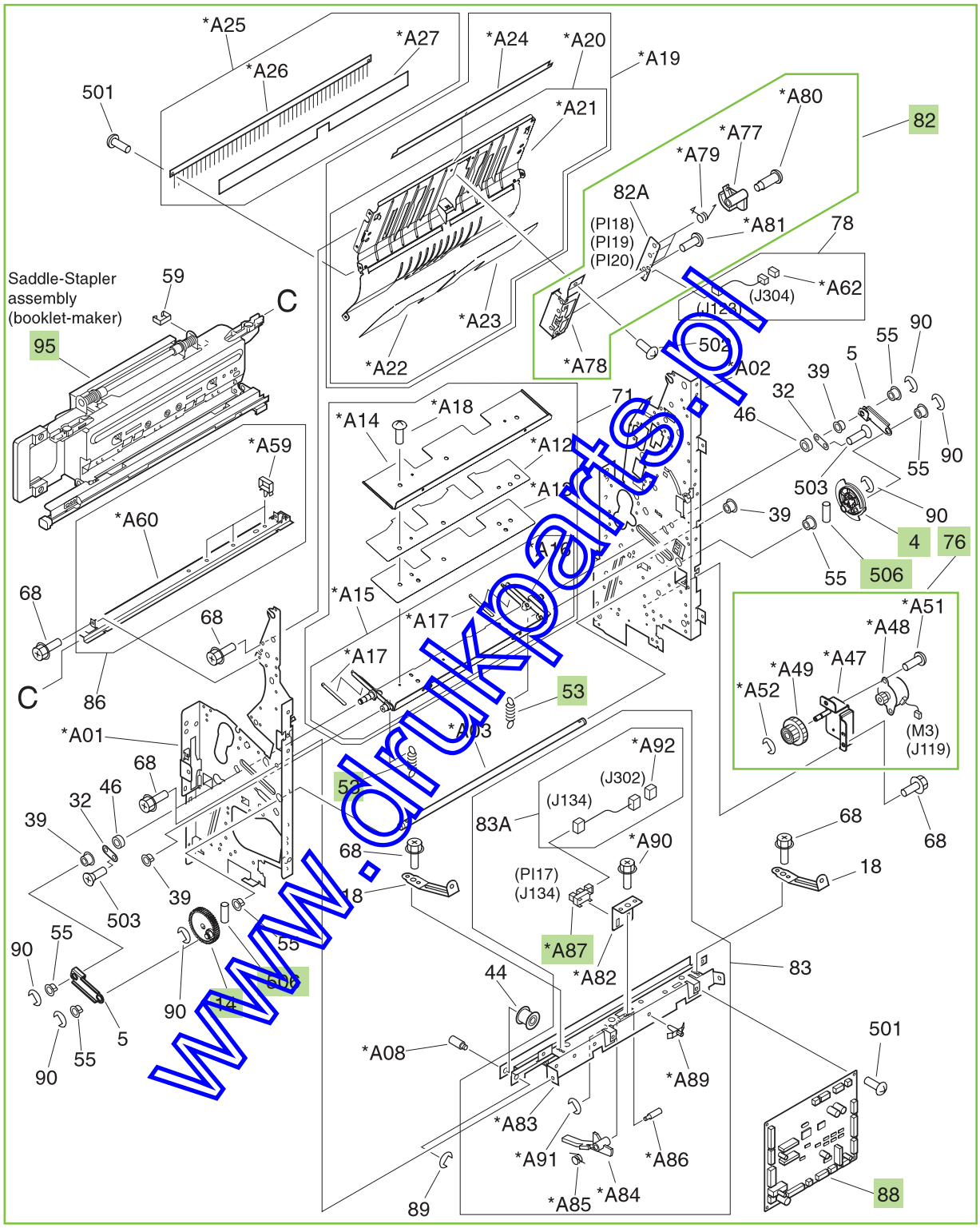

www.drukparts.pl

Table 9-47 Saddle assembly (booklet-maker)

Ref	Description	Part number	Qty
2	Arm, adjustment, front	4A3-1763-000CN	1
3	Arm, adjustment, rear	4A3-1764-000CN	1
4	Plate, rotation	4A3-1779-000CN	1
6	Lever, stopper	4A3-1782-000CN	1
7	Roller, folding	4A3-1783-000CN	2
14	Gear, 50T	4S3-0171-000CN	1
15	Bearing, ball, 6902ZZNR	4S3-1050-000CN	4
16	Spring, tension	4S3-2116-000CN	2
17	Spring, tension	4S3-2117-000CN	2
21	Flag, roller	FB3-7925-030CN	1
23	Deflector	FB3-7928-020CN	1
24	Rack, rear	FB3-7934-000CN	1
27	Rack, front	FB3-7967-000CN	1
28	Holder, roller, 2	FB3-7973-000CN	1
29	Flag, sensor	FB3-7979-000CN	1
30	Spring, torsion	FB3-7980-000CN	1
33	Deflector	FB5-2697-000CN	1
34	Flag, sensor	FB5-5937-020CN	1
35	Claw, latch, right	FC5-5021-000CN	1
41	Pulley, 30T	FS5-3576-000CN	1
42	Pulley, 39T	FS5-3577-000CN	1
48	Gear, 16T/33T	FS6-0822-000CN	1
49	Gear, 16T	FS6-0823-000CN	1
50	Gear, 16T/56T	FS6-0829-000CN	1
51	Gear, 16T	FS6-0830-000CN	1
53	Spring, tension	FS6-2582-000CN	2
58	Photo interrupter, TLP1242	WG8-5593-000CN	6
69	Belt, timing	XF2-3837-340CN	1
70	Cable, saddle-unit	4G1-2283-000CN	1
76	Guide-motor assembly	4G3-0725-000CN	1
77	Plate, tension	FF5-5805-040CN	1
82	Rear-end sensor assembly	FM2-0763-000CN	1
84	Delivery-switch mount assembly	FM2-1639-000CN	1
87	Upper delivery-guide assembly	RM1-4131-000CN	1

www.drukparts.pl

Table 9-47 Saddle assembly (booklet-maker) (continued)

Ref	Description	Part number	Qty
88	Saddle-controller PCA assembly	RM1-4140-000CN	1
91	Saddle paper-delivery assembly	RM1-4130-000CN	1
92	Motor-mount assembly	4G3-0670-000CN	1
93	Saddle-guide assembly	FM2-0756-000CN	1
94	Inner side-plate assembly	4G3-0671-000CN	1
95	Saddle-stapler assembly	RM1-4178-000CN	1
505	Ring, C, external	XD2-3100-152CN	4
506	Pin, dowel	XD3-2300-202CN	2
A61	Photo interrupter, TLP1242	WG8-5593-000CN	1
A87	Photo interrupter, TLP1242	WG8-5593-000CN	1
A94	Photo interrupter, TLP1242	WG8-5593-000CN	1

NOTE: Only highlighted parts are orderable.

www.drukparts.pl

www.drukparts.pl

Figure 9-64 Saddle-tray assembly (booklet-maker)

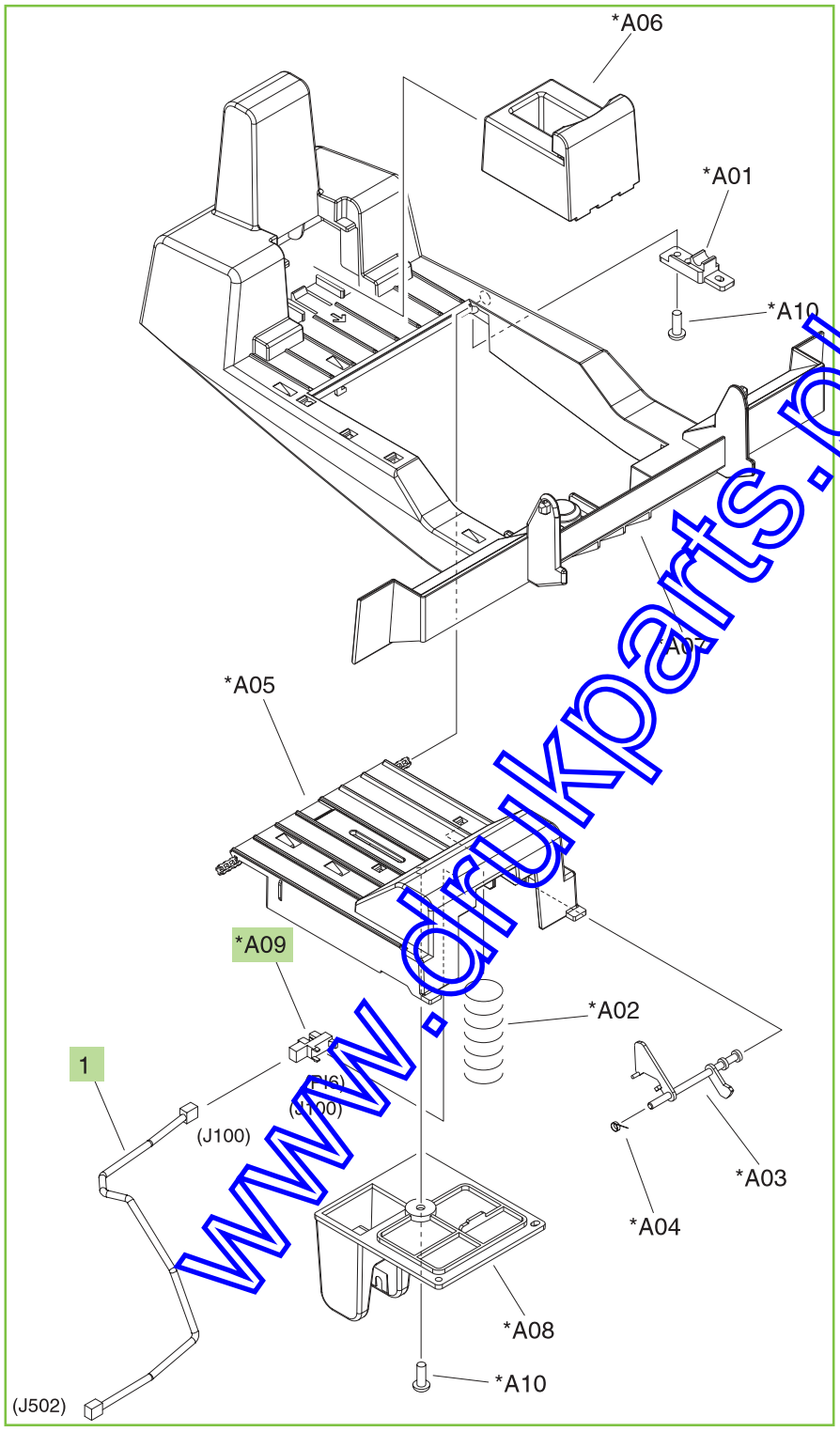

www.drukparts.pl

Table 9-48 Saddle-tray assembly (booklet-maker)

Ref	Description	Part number	Qty
All	Booklet-output bin (saddle-tray assembly)	RM1-4113-000CN	1
1	Cable, sensor	4G1-2285-000CN	1
A09	Photo interrupter, TLP1242	WG8-5593-000CN	1

NOTE: Only highlighted parts are orderable.

www.drukparts.pl

Figure 9-65 Saddle-guide assembly (booklet-maker)

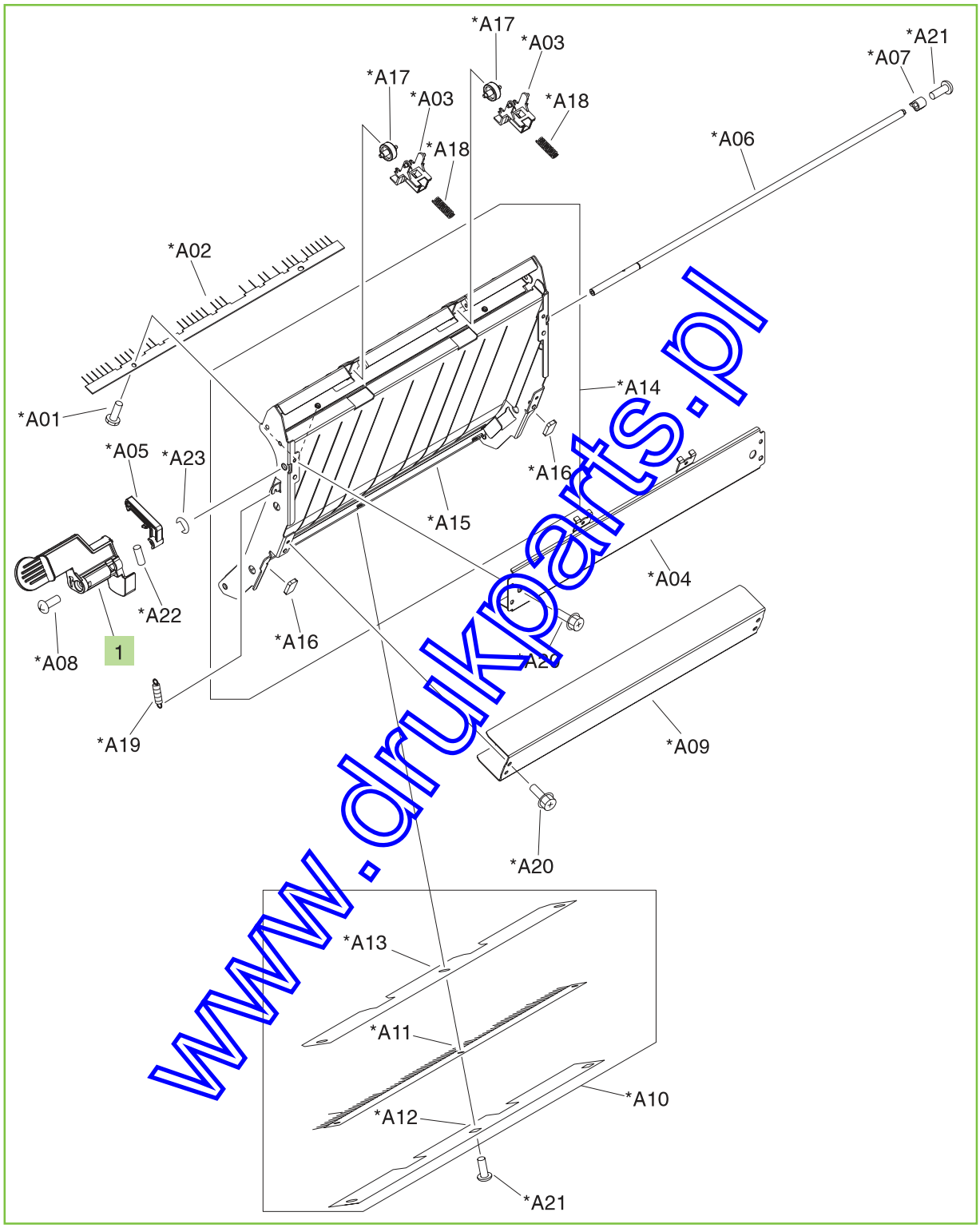

www.drukparts.pl

Table 9-49 Saddle-guide assembly (booklet-maker)

Ref	Description	Part number	Qty
All	Saddle-guide assembly	FM2-5024-000CN	1
1	Knob, latch	FC5-5024-000CN	1

NOTE: Only highlighted parts are orderable.

www.drukparts.pl

Figure 9-66 Saddle-stapler assembly (booklet-maker)

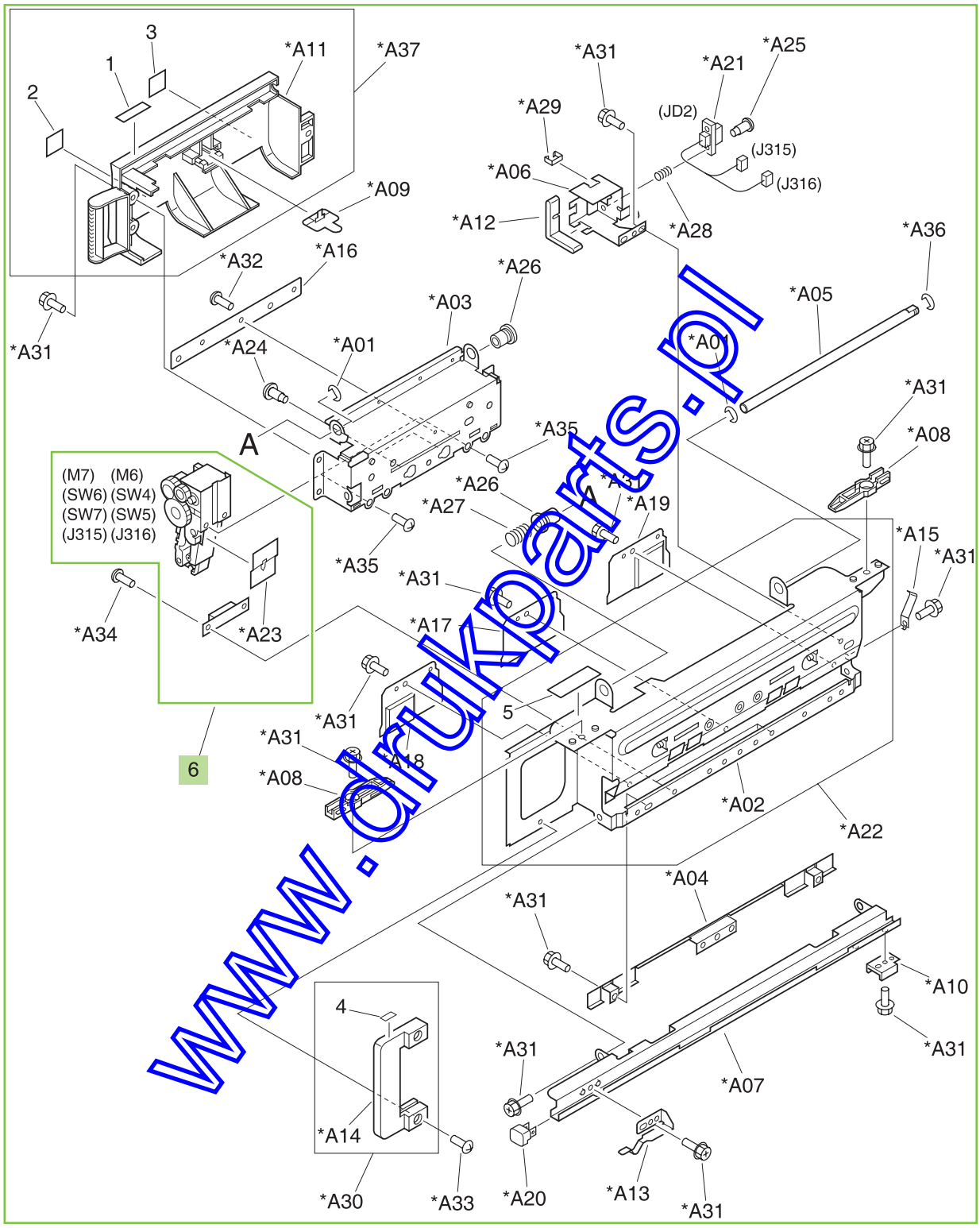

www.drukparts.pl

Table 9-50 Saddle-stapler assembly (booklet-maker)

Ref	Description	Part number	Qty
All	Saddle-stapler assembly	RM1-4178-000CN	1
6	Stapler unit	FL2-0846-000CN	2
	5000-staple replacement cartridge	C8091-67901	1
	2000-staple cartridge (for booklet making)	CC383-67901	1

NOTE: Only highlighted parts are orderable.

www.drukparts.pl

Figure 9-67 Saddle paper-feeder assembly (stapler/stacker)

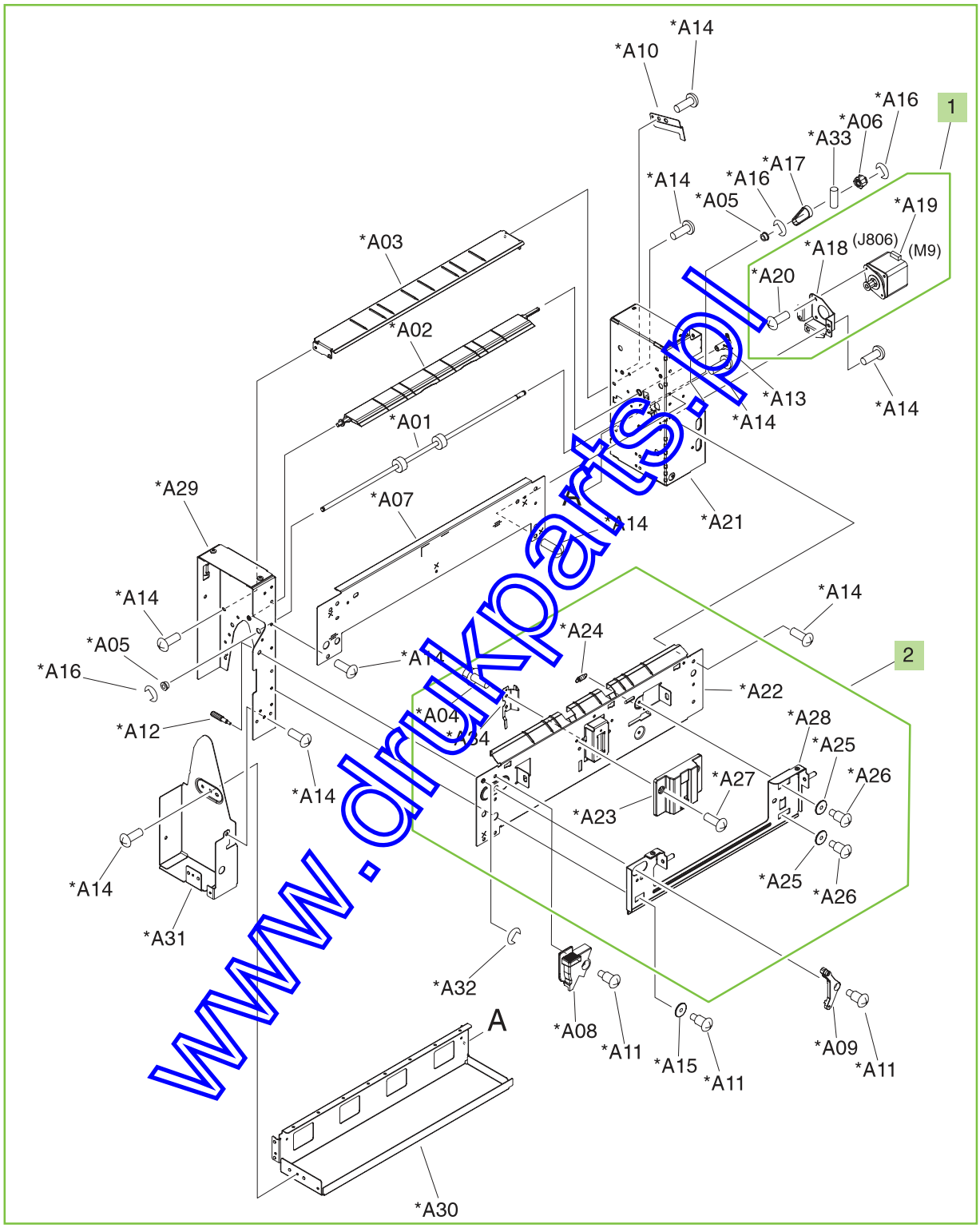

www.drukparts.pl

Table 9-51 Saddle paper-feeder assembly (stapler/stacker)

Ref	Description	Part number	Qty
All	Saddle paper-feeder assembly	RM1-4136-000CN	1
1	Saddle-motor assembly	FM2-0737-000CN	1
2	Entrance lower-guide assembly	RM1-4110-000CN	1

NOTE: Only highlighted parts are orderable.

www.drukparts.pl

Figure 9-68 Saddle paper-feeder assembly (booklet-maker)

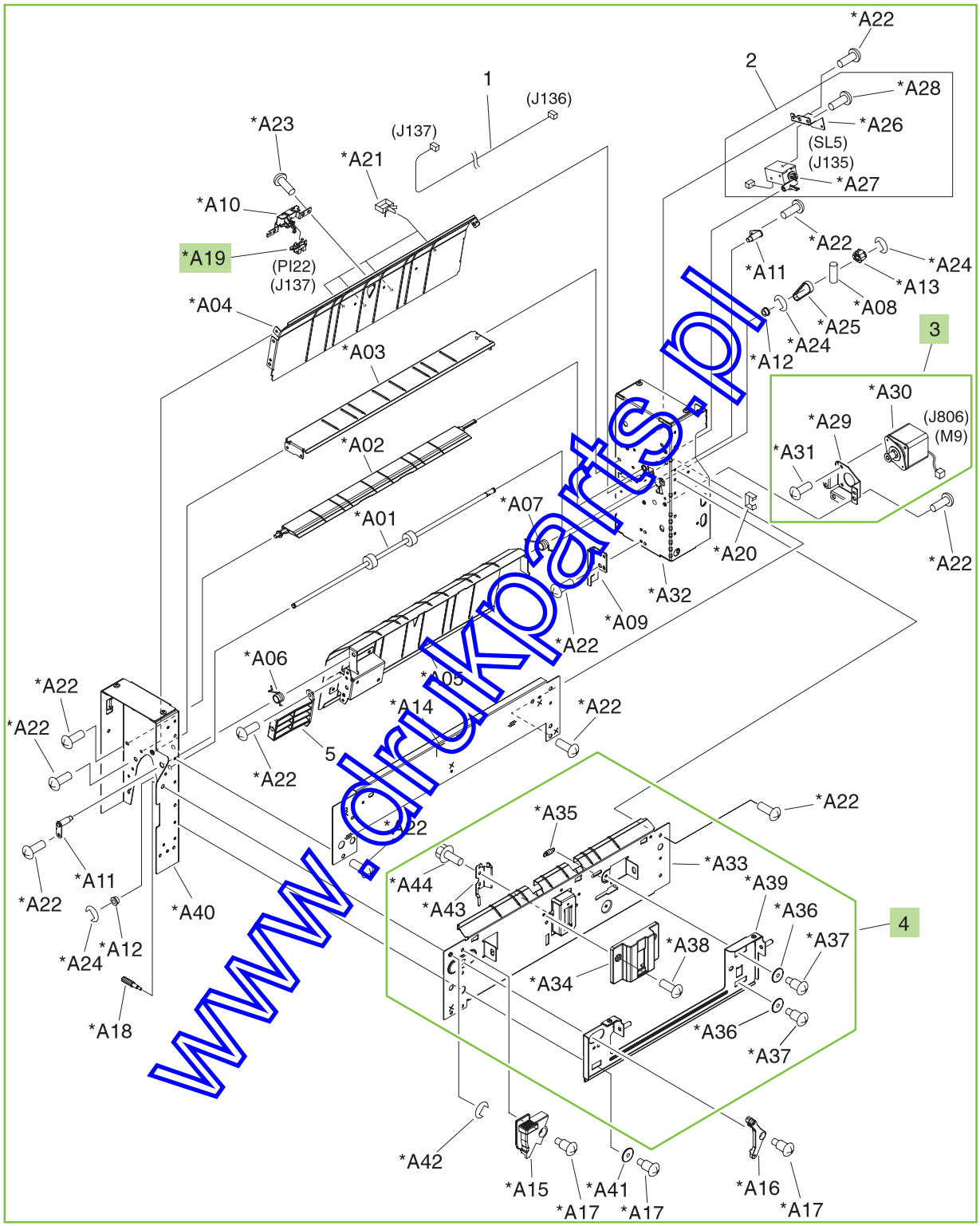

www.drukparts.pl

Table 9-52 Saddle paper-feeder assembly (booklet-maker)

Ref	Description	Part number	Qty
All	Saddle paper-feeder assembly	RM1-4109-000CN	1
3	Saddle-motor assembly	FM2-0737-000CN	1
4	Entrance lower-guide assembly	RM1-4110-000CN	1
A19	Photo interrupter, TLP1242	WG8-5593-000CN	1

NOTE: Only highlighted parts are orderable.

www.drukparts.pl

Figure 9-69 Pass lower-guide assembly (booklet-maker)

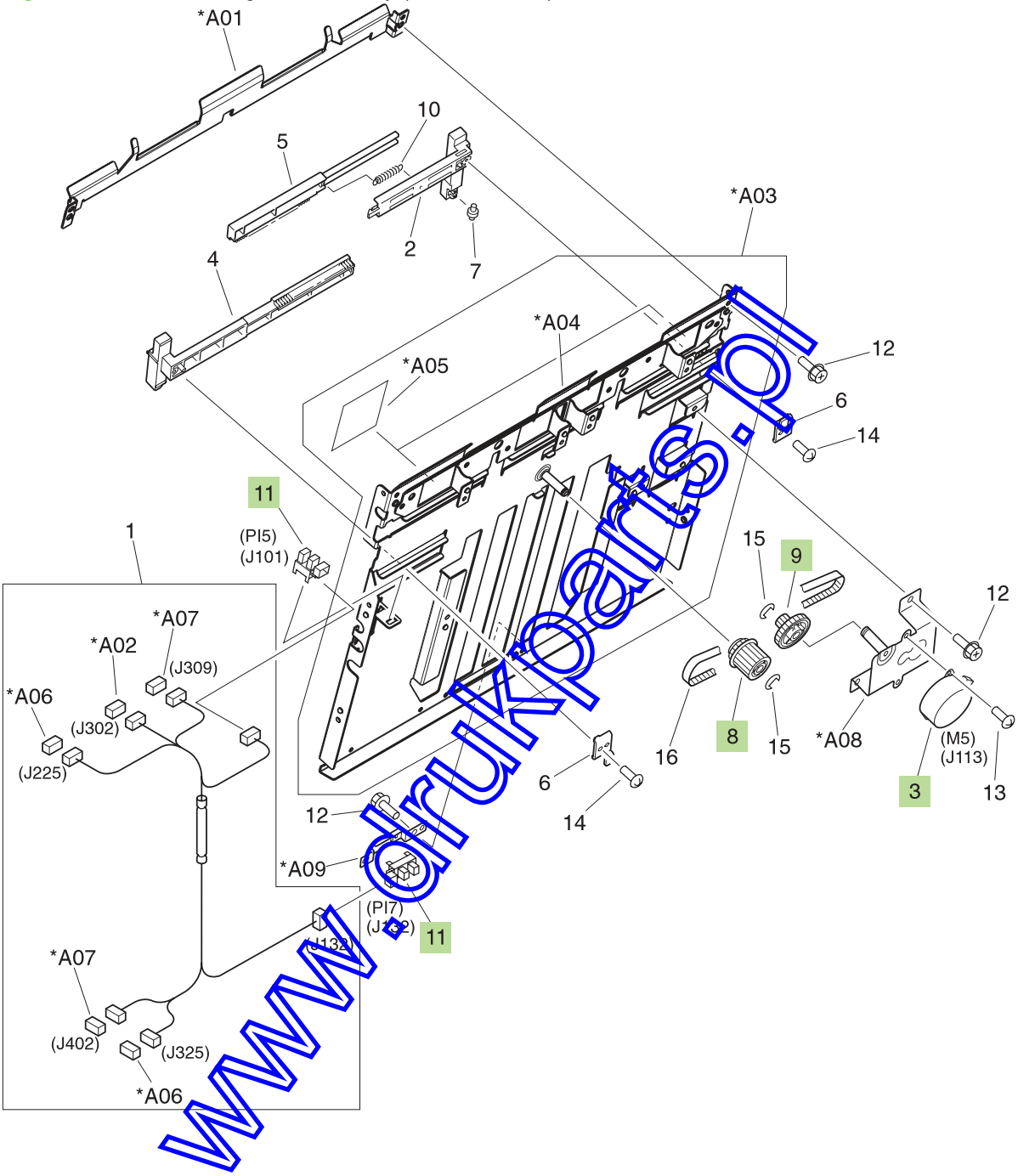

www.drukparts.pl

Table 9-53 Pass lower-guide assembly (booklet-maker)

Ref	Description	Part number	Qty
3	Motor, stepping	4K1-1103-000CN	1
8	Pulley, 32T/gear, 16T	FS6-0814-000CN	1
9	Pulley, 16T/gear, 32T	FS6-0815-000CN	1
11	Photo interrupter, TLP1242	WG8-5593-000CN	2

NOTE: Only highlighted parts are orderable.

www.drukparts.pl

Figure 9-70 Inner side-plate assembly (booklet-maker)

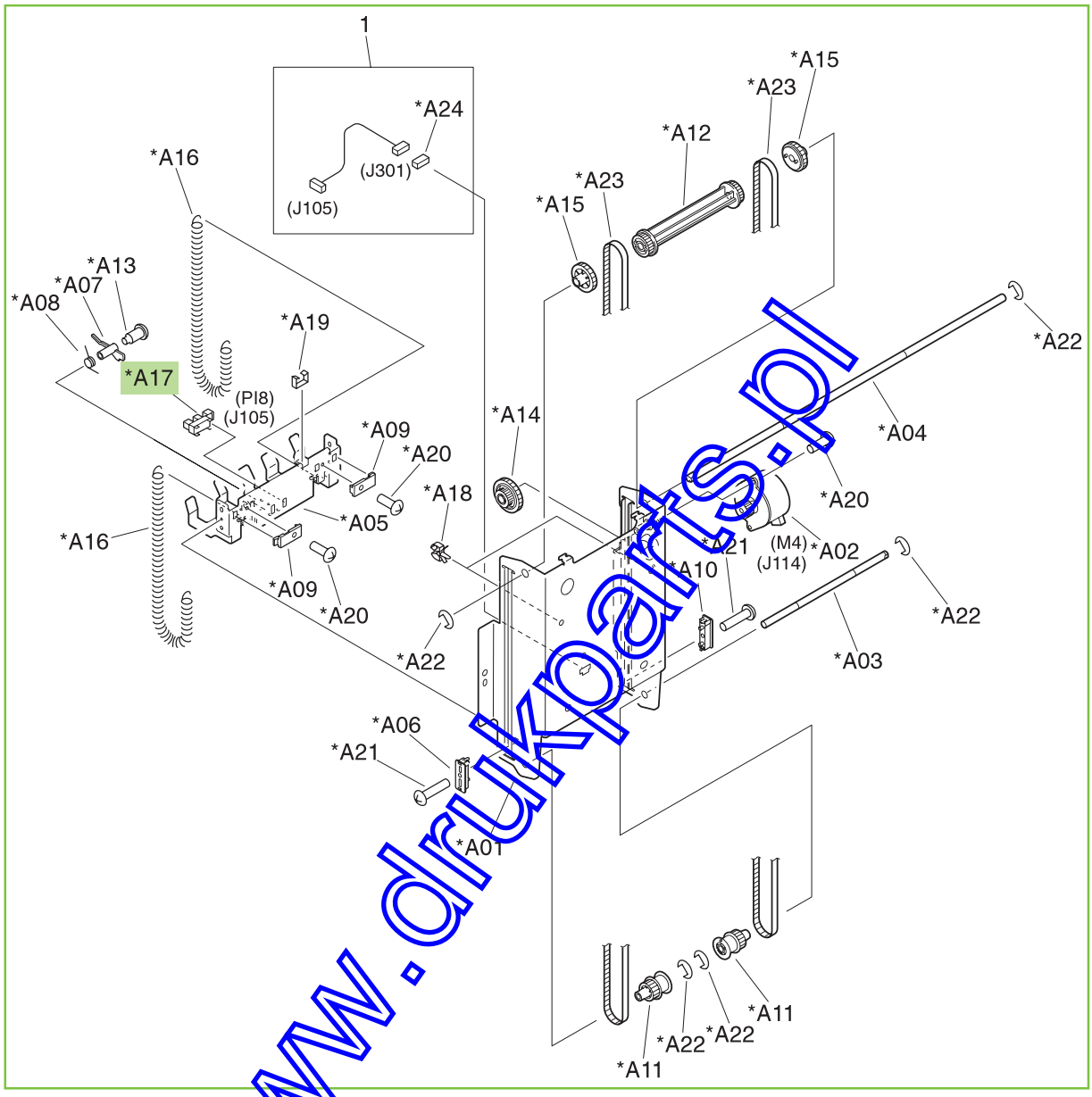

www.drukparts.pl

Table 9-54 Inner side-plate assembly (booklet-maker)

Ref	Description	Part number	Qty
All	Inner side-plate assembly	4G3-0671-000CN	1
A17	Photo interrupter, TLP1242	WG8-5593-000CN	1

NOTE: Only highlighted parts are orderable.

www.drukparts.pl

Figure 9-71 Saddle paper-delivery assembly (booklet-maker)

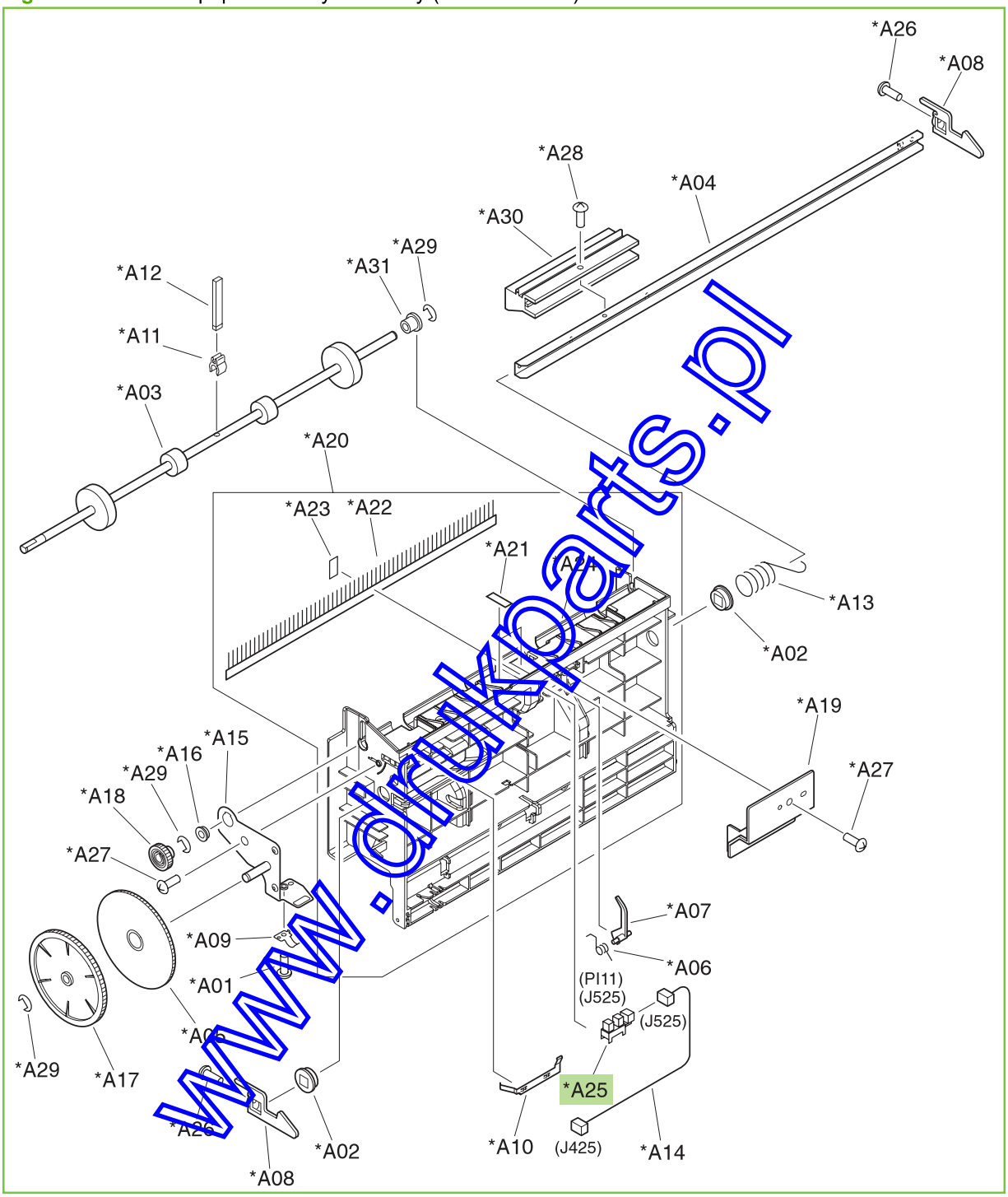

www.drukparts.pl

Table 9-55 Saddle paper-delivery assembly (booklet-maker)

Ref	Description	Part number	Qty
All	Saddle paper-delivery assembly	RM1-4130-000CN	1
A25	Photo interrupter, TLP1242	WG8-5593-000CN	1

NOTE: Only highlighted parts are orderable.

www.drukparts.pl

Figure 9-72 Motor-mount assembly (booklet-maker)

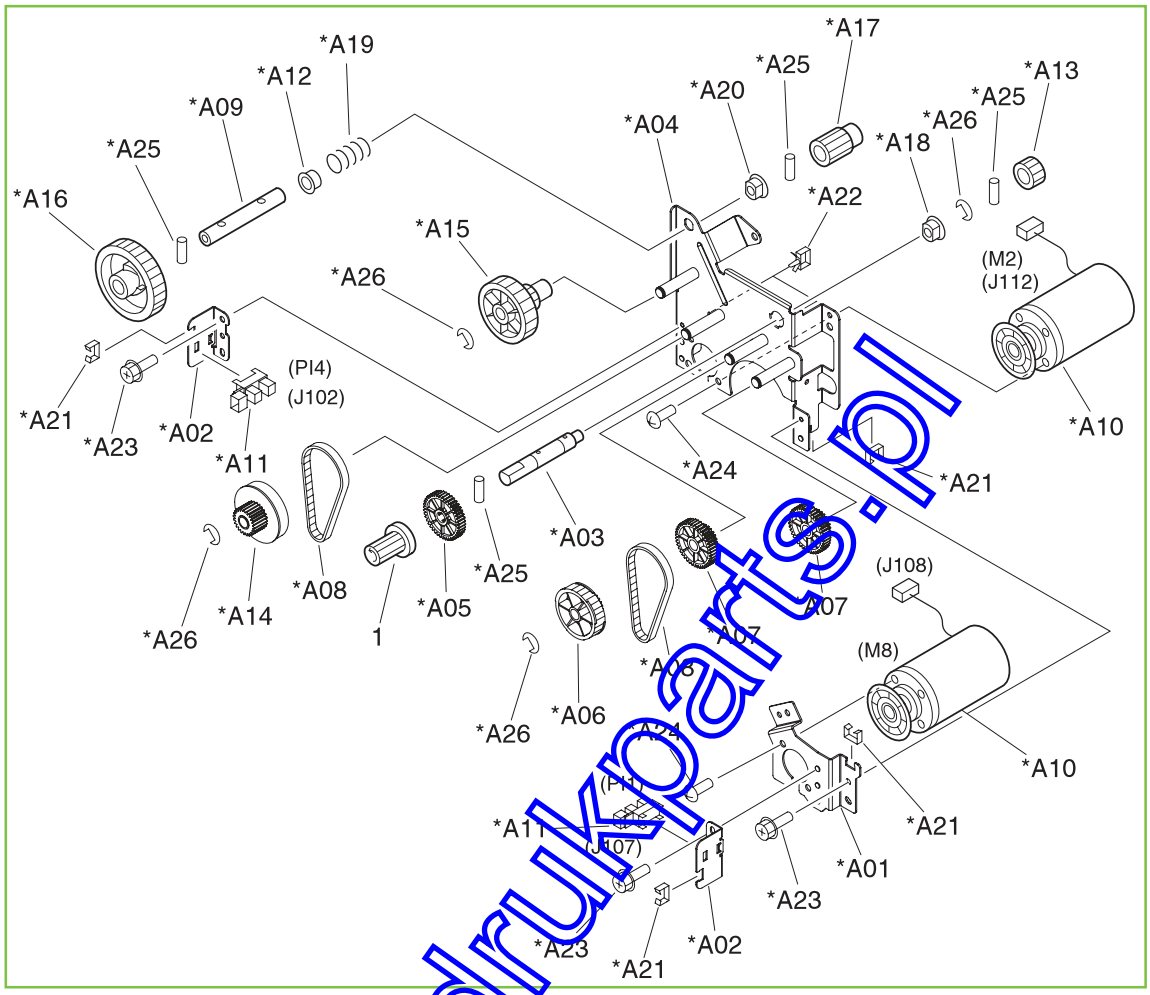

www.drukparts.pl

Table 9-56 Motor-mount assembly (booklet-maker)

Ref	Description	Part number	Qty
All	Motor-mount assembly	4G3-0670-000CN	1

NOTE: Only highlighted parts are orderable.

www.drukparts.pl

Figure 9-73 PCA assembly

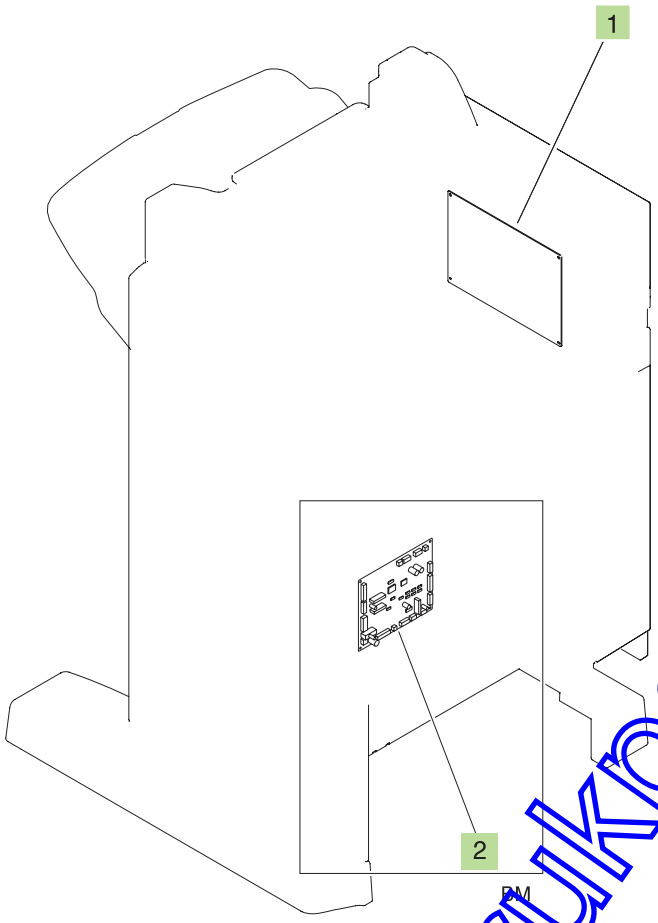

www.drukparts.pl

Table 9-57 PCA assembly

Ref	Description	Part number	Qty
1	Main controller PCA assembly (stapler/stacker and booklet-maker)	RM1-4139-000CN	1
2	Saddle-controller PCA assembly (booklet-maker)	RM1-4140-000CN	1

NOTE: Only highlighted parts are orderable.

www.drukparts.pl