FAX-L700F

PARTS CATALOG

REVISION 0

www.drukparts.pl

Canon

SEPT. 1993

HY8-3F13-000

COPYRIGHT © CANON FRANCE SEPTEMBRE 1993 CANON FAX-L700F REV.0 (IMPRIME EN FRANCE)

Canon

MAIN PARTS LIST FAX-L700F

01/02/00

Parts number	Qty	Description	Figure	Key no	Remarks
ELECTRICAL PART					
HH3-5249-000	1	POWER SUPPLY UNIT	110	2	
HG1-3811-001	1	SCNT CARD UNIT	100	12	
HG1-3812-001	1	NCU CARD UNIT	100	13	
HG1-2453-000	1	DCNT CARD UNIT	110	1	
RG9-0695-000	1	H.V. POWER SUPPLY CARD UNIT	110	5	
HG1-2518-020	1	DENSITY ADJUSTING CARD UNIT	150	2	
RF1-3304-000	1	HEATER, HALOGEN	141	10	
MECHANICAL PART					
HG1-2539-000	1	FIXING ASS'Y	140	7	
HH7-1954-000	1	OPERATION PANEL UNIT	100	19	
HG1-3663-060	1	ADF UNIT	120		
HG1-3664-000	1	CONTACT SENSOR UNIT	120	24	
RG1-1769-020	1	LASER ASS'Y	130	8	
RG1-1771-030	1	SCANNER MOTOR ASS'Y	130	9	
HA1-7351-000	1	SEPARATION ROLLER	120	15	
HA1-7352-000	1	SUB SEPARATION ROLLER	120	16	
HS1-2033-000	1	SPRING CLUTCH	100	31	
HG1-2383-000	1	SEPARATION GUIDE	120	20	
RH2-5104-000	1	OPTICAL FIBER CABLE	130	18	
HA2-0861-000	1	ROLLER TRANSFER	140	3	
RG9-0681-000	1	TRANSFER GUIDE ASS'Y	140	22	
RA1-7824-000	1	ROLLER PICK-UP	170	17	
RA1-7674-000	3	ROLLER PICK-UP	170	15	
RG1-1912-080	1	SEPARATION PAD UNIT	130	17	
RS1-2236-000	1	SPRING SWITCH N°19			
RF1-2483-020	1	THERMO SWITCH(CONT)	141	9	
RF1-2484-020	1	THERMO SWITCH(NOC)	141	8	
RF1-2405-030	1	CABLE THERMISTOR	141	6	
PACKAGE CONTENTS					
HA2-1845-000	1	SHEET REGISTRATION	100	22	
HA1-6581-000	1	ADDRESS LABEL	100	7	
HA1-6579-000	1	EJECT PAPER TRAY	100	5	
HA1-6578-000	1	DOCUMENT TRAY	100	4	
HH2-2219-001	1	MODULAR, CORD	100	23	
COVERS					
HA1-6591-000	1	COVER, FRONT	100	8	
HG1-3969-000	1	COVER UNIT, UPPER	160		
MOTOR					
RH7-1098-000	1	MOTOR	130	19	
TOOL					

www.drukparts.pl

CONTENTS

100 EXTERNAL COVERS, ETC....2

110 INTERNAL COMPONENTS....4

120 ADF UNIT....6

130 PRINTER UNIT....8

140 PRINTER COVER UNIT....10

141 FIXING UNIT....12

150 INTERNAL COVER ASSEMBLY....14

160 UPPER COVER UNIT....16

170 CASSETTE FEEDER UNIT....18

180 CASSETTE 250 (A4)....20

190 OPERATION PANEL UNIT....22

200 WIRING....24

SCREW & WASHER LIST....26

NUMERICAL INDEX....31

www.drukparts.pl

Memorandum

www.drukparts.pl

100. EXTERNAL COVERS, ETC.

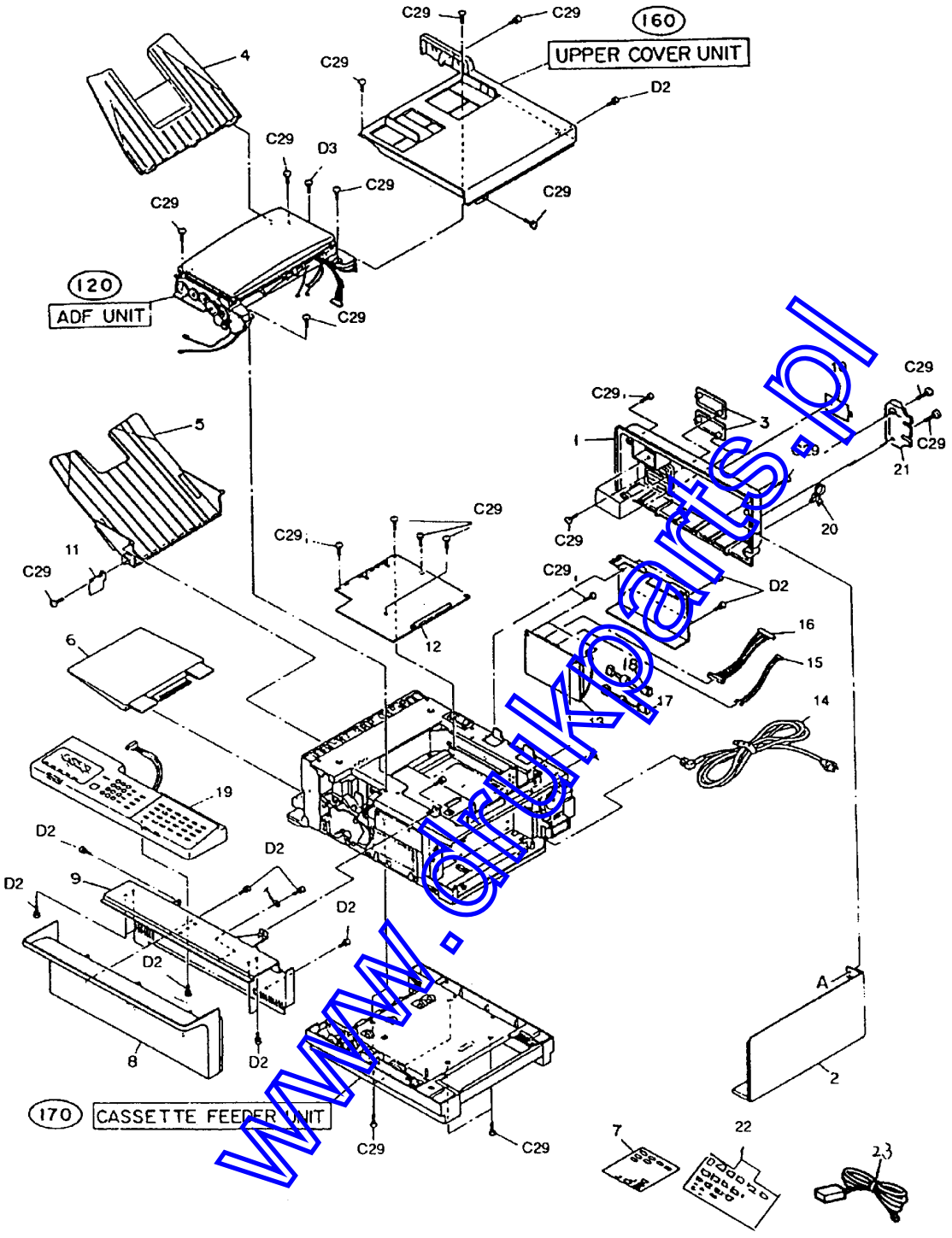

www.drukparts.pl

FIGURE & KEY NO.	PART NO.	RANK	Q'TY	DESCRIPTION	REMARKS
100	NPN		RF	EXTERNAL COVERS, ETC.	
1	HA1-6552-000		1	REAR COVER	
2	HA1-6553-000		1	SIDE COVER	
3	HA1-6555-000		2	CONNECTOR COVER	
4	HA1-6578-000		1	DOCUMENT TRAY	
5	HA1-6579-000		1	EJECT PAPER TRAY	
6	HA1-6580-000		1	EXTENSION TRAY	
7	HA1-6581-000		2	ADDRESS LABEL	
8	HA1-6591-000		1	FRONT COVER	
9	HA1-6592-000		1	FRAME, OPERATION PANEL	
10	HA2-0145-000		1	COVER,ENTRY SW	
11	HA1-7612-000		1	PROTECT COVER	
12	HG1-3811-001		1	SCNT CARD UNIT	
13	HG1-3812-001		1	NCU CARD UNIT	
14	HH2-1727-000		1	POWER SUPPLY CORD	
15	HH2-1719-000		1	CABLE WITH CONNECTOR, 7P	
16	HH2-1720-000		1	CABLE WITH CONNECTOR, 25P	
17	HH2-2127-000		1	MODULAR ASSEMBLY	
18	HH2-2128-000		1	MODULAR ASSEMBLY WITH CORE	
19	HH7-1954-000		1	OPERATION PANEL UNIT	
20	WT2-5014-000		1	CABLE TIE	
21	HA1-6589-000		1	MODULAR COVER	
22	HA2-1845-000		1	SHEET, REGISTRATION	
23	HH3-2219-000		1	MODULAR JACK CORD	

www.drukparts.pl

110. INTERNAL COMPONENTS

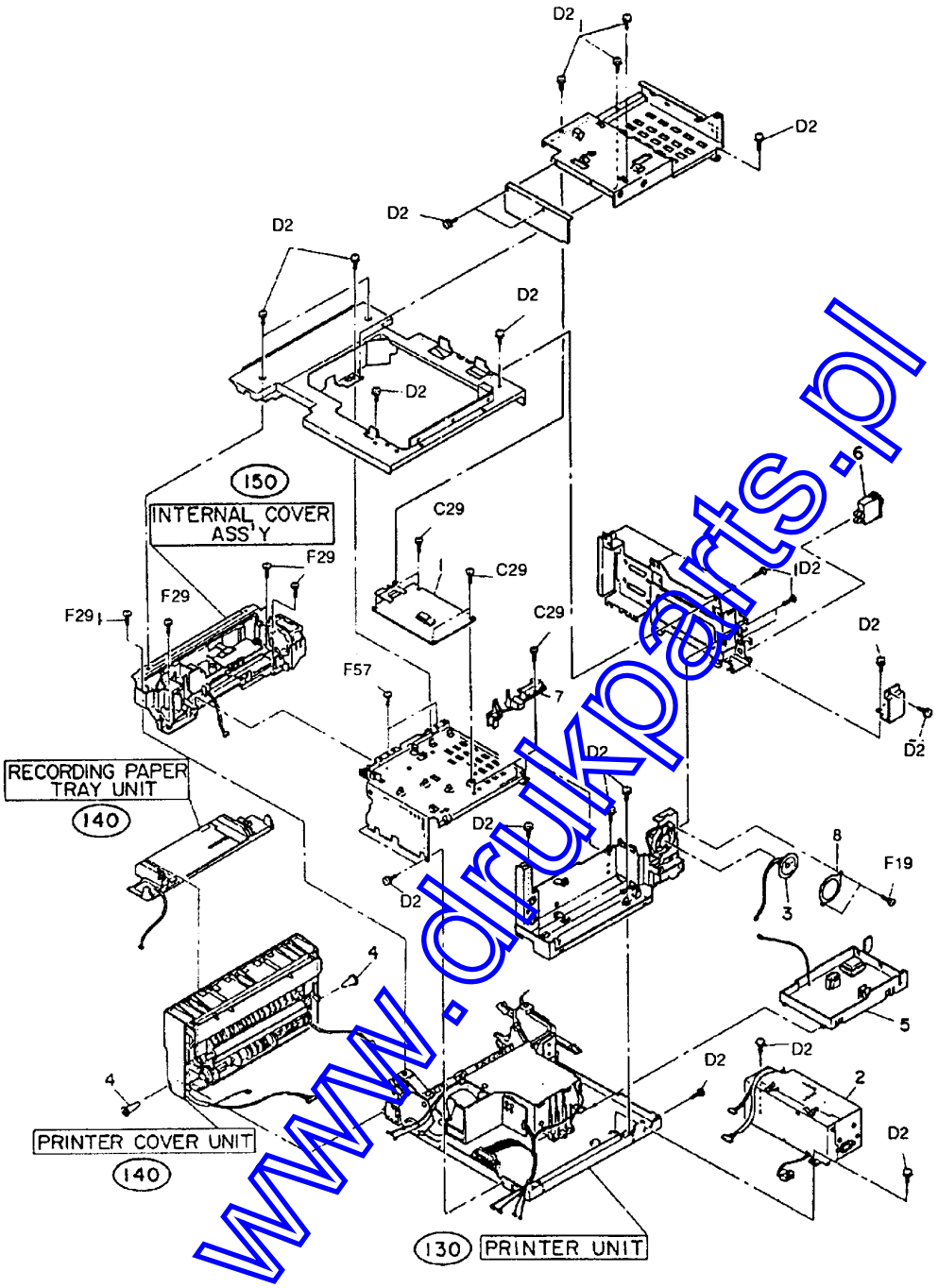

www.drukparts.pl

FIGURE & KEY NO.	PART NO.	RANK	Q'TY	DESCRIPTION	REMARKS
110	NPN		RF	INTERNAL COMPONENTS	
1	HG1-2453-000		1	DCNT CARD UNIT	
2	HH3-5249-000		1	POWER SUPPLY UNIT	
3	HH7-1399-000		1	SPEAKER UNIT	
4	RA1-7499-000		2	PIVOT	
5	RG9-0695-000		1	H.V. POWER SUPPLY CARD UNIT	
6	WC1-0125-000		1	POWER SW	
7	RA1-7552-000		1	MOUNT,POSITIONING	
8	HA1-6576-000		1	SPEAKER HOLDER	

www.drukparts.pl

120. ADF UNIT

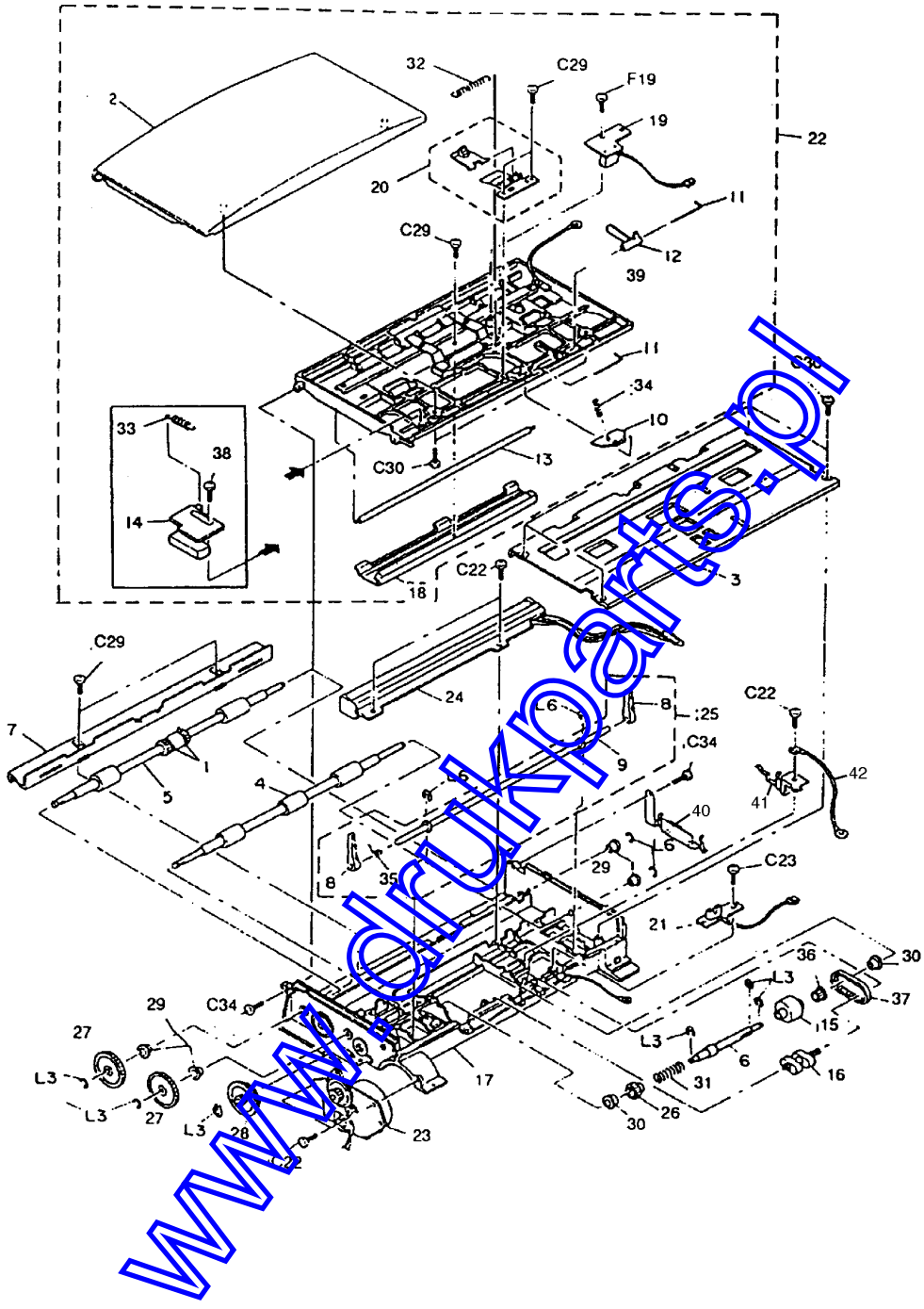

www.drukparts.pl

FIGURE & KEY NO.	PART NO.	RANK	Q'TY	DESCRIPTION	REMARKS
120	HG1-3663-000		1	ADF UNIT	
1	HA1-4642-000		2	SUB ROLLER, EJECT	
2	HA1-6554-000		1	ADF COVER	
3	HA1-6602-000		1	DOCUMENT GUIDE, LOWER	
4	HA1-6603-000		1	ROLLER, DOCUMENT FEED	
5	HA1-6604-000		1	ROLLER, DOCUMENT EJECT	
6	HA1-6607-000		1	SHAFT, SUB SEPARATION ROLLER	
7	HA1-6612-000		1	BRACKET, DOCUMENT TRAY	
8	HA1-6613-000		2	HOOK LEVER	
9	HA1-6614-000		1	SHAFT, HOOK LEVER	
10	HA1-6631-000		1	SUB SEPARATION GUIDE	
11	HA1-6632-000		2	SHAFT	
12	HA1-6637-000		1	ACTUATOR, DS	
13	HA1-6644-020		1	SHAFT, DOCUMENT PRESSURE	
14	HA1-6648-060		1	RELEASE KNOB, ADF COVER	
15	HA1-7351-000		1	SEPARATION ROLLER	
16	HA1-7352-000		1	SUB SEPARATION ROLLER	
17	HF1-0672-000		1	ADF FRAME UNIT	
18	HF1-0673-000		1	PRESSURE PLATE, DOCUMENT	
19	HG1-2346-000		1	DOCUMENT EDGE SENSOR	
20	HG1-2383-000		1	SEPARATION GUIDE	
21	HG1-2402-000		1	DOCUMENT SENSOR	
22	HG1-3317-000		1	DOCUMENT GUIDE UNIT (UPPER)	
23	HG1-3483-000		1	ADF DRIVE UNIT	
24	HG1-3664-000		1	CONTRACT SENSOR UNIT	
25	HG9-0495-000		1	HOOK LEVER ASS'Y	
26	HS1-0223-000		1	GEAR, 15T	
27	HS1-0225-000		2	GEAR, 68T	
28	HS1-0226-000		1	GEAR, 68/80T	
29	HS1-1017-000		4	BUSHING, 6MM	
30	HS1-1030-000		2	BUSHING, 4MM	
31	HS1-2033-000		1	SPRING, CLUTCH	
32	HS1-2217-000		1	SPRING	
33	HS1-2218-000		1	SPRING	
34	HS1-2221-000		1	SPRING	
35	HS1-2222-000		1	SPRING	
36	HS1-3064-000		1	PULLY, 15T	
37	XF9-0305-000		1	COGGED BELT	
38	FS1-9009-000		1	TWO-STEP SCREW, M3	
39	HA1-6621-080		1	DOCUMENT,GUIDE,UPPER	
40	HA1-6615-000		1	GROUNDING PLATE 1	
41	HA1-6616-000		1	GROUNDING PLATE 2	
42	HH2-1811-000		1	GND,CABLE,CA19	

www.oriparts.pl

130. PRINTER UNIT

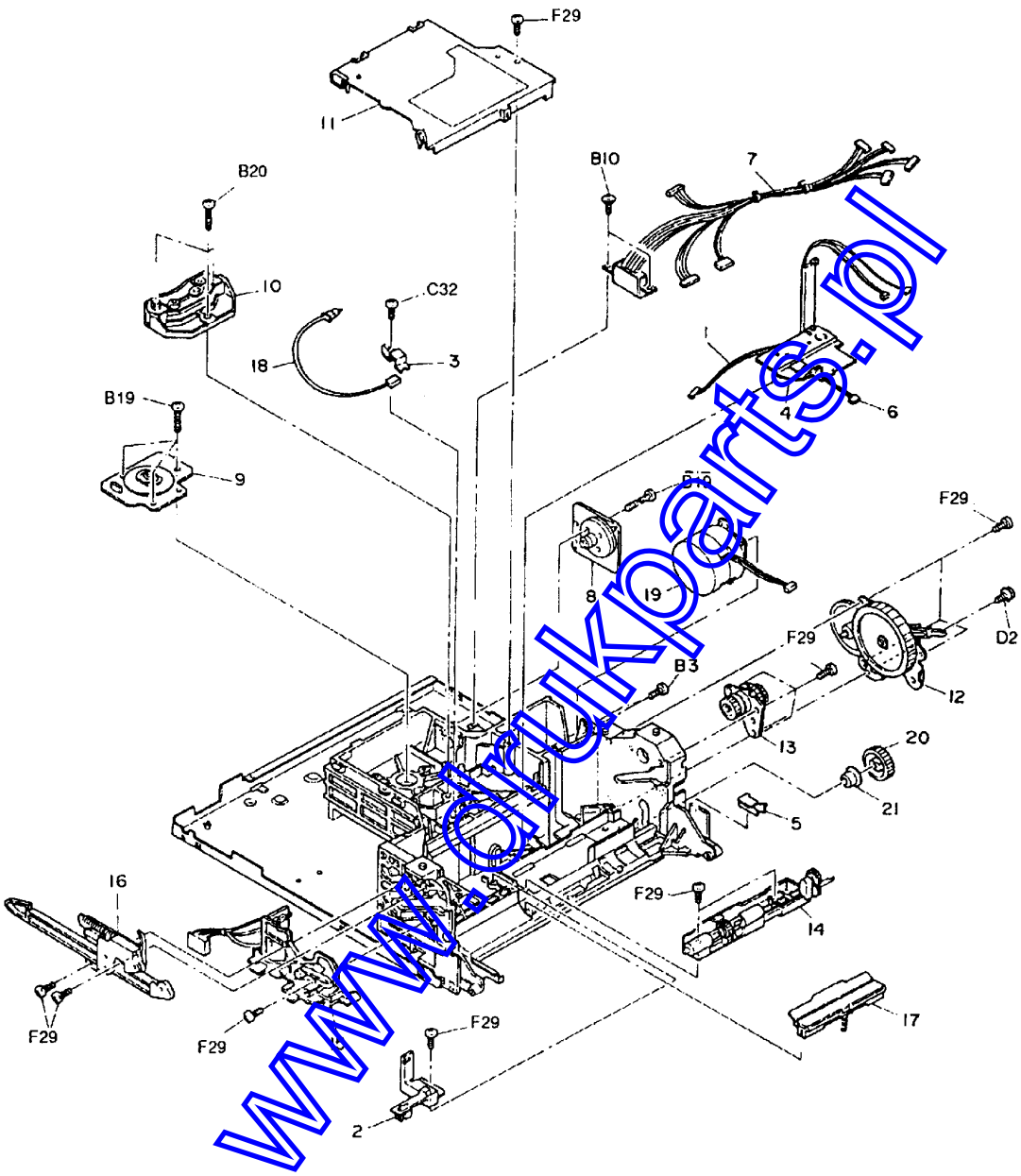

www.qukparts.pl

FIGURE & KEY NO.	PART NO.	RANK	QTY	DESCRIPTION	REMARKS
130	NPN		RF	PRINTER UNIT	
1	HH2-1774-000		1	CABLE ASSEMBLY, 3 PIN	
2	HH7-1576-000		1	TONER SENSOR	
3	RA1-7446-000		1	BLOCK, FIBER HOLDER	
4	RA1-7502-000		1	COVER, CABLE	
5	RA1-7506-000		1	COVER, CORD	
6	RF1-2385-000		1	CABLE, SENSOR	
7	RG1-1609-000		1	REAR CABLE ASSEMBLY	
8	RG1-1769-000		1	LASER ASSEMBLY	
9	RG1-1771-030		1	SCANNER MOTOR ASSEMBLY	
10	RG1-1772-000		1	LENS ASSEMBLY	
11	RG1-1773-040		1	SHUTTER ASSEMBLY	
12	RG1-1776-000		1	DRIVE ASSEMBLY	
13	RG1-1777-000		1	DRUM DRIVE ASSEMBLY	
14	RG1-1778-030		1	FEEDER ASSEMBLY	
15	RG1-1780-000		1	H.V. CONTACT ASSEMBLY	
16	RG1-1781-030		1	ROD ASSEMBLY	
17	RG1-1912-000		1	SEPARATION PAD UNIT	
18	RH2-5104-000		1	OPTICAL FIBER CABLE	
19	RH7-1098-000		1	MOTOR, STEPPING, PC4W	
20	RS1-0284-000		1	GEAR, 30T	
21	RS1-1048-000		1	BUSHING	

www.drukparts.pl

140. PRINTER COVER & RECORDING PAPER TRAY UNIT

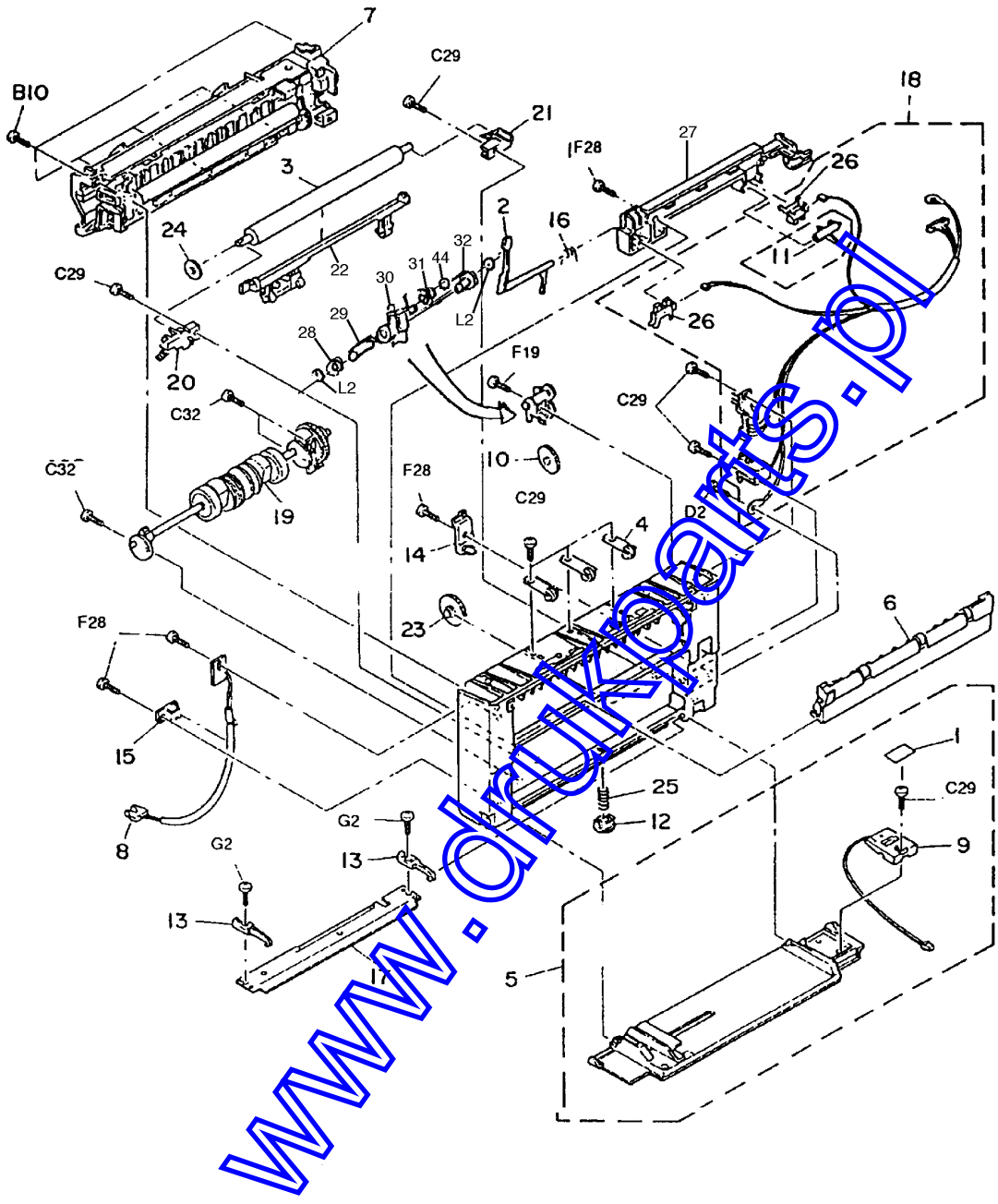

www.drukparts.pl

FIGURE & KEY NO.	PART NO.	RANK	Q'TY	DESCRIPTION	REMARKS
140	HG1-2538-000		1	PRINTER COVER UNIT	
1	HA1-6683-000		1	SWITCH LABEL, PAPER SIZE	
2	HA1-6686-000		1	ACTUATOR, FU COVER SENSOR	
3	HA2-0861-000		1	ROLLER, TRANSFER	
4	HF1-0677-000		3	EJECT GUIDE ROLLER	
5	HG1-2351-000		1	RECORDING PAPER TRAY UNIT	
6	HG1-2386-000		1	EJECT ROLLER UNIT	
7	HG1-2539-000		1	FIXING UNIT	
8	HG1-2600-000		1	FIXING AC PCB ASSEMBLY	
9	HH7-1557-000		1	R.P. SIZE SWITCH	
10	HS1-0230-000		1	GEAR, 22T	
11	RA1-7562-000		1	LEVER, PAPER SENSOR	
12	RA1-7628-000		1	CAP, SPRING	
13	RA1-7629-000		2	ARM, PAPER PICK-UP	
14	RA1-7632-000		1	COVER, CORD, FRONT	
15	RA1-7637-000		1	HOLDER, CORD	
16	RA1-7718-000		1	SPRING, TORSION	
17	RF1-2400-000		1	PLATE, PAPER GUIDE	
18	RG1-1608-000		1	CABLE ASS'Y	
19	RG1-1792-150		1	PICK-UP ROLLER ASS'Y	
20	RG1-1793-000		1	LEFT TR ROLLER MOUNT ASS'Y	
21	RG1-1794-000		1	RIGHT TR ROLLER MOUNT ASS'Y	
22	RG9-0681-000		1	TRANSFER GUIDE ASS'Y	
23	RS1-0290-000		1	GEAR, 30T	
24	RS1-0292-000		1	GEAR, 27T	
25	HA9-0132-000		1	SPRING, COMPRESSION	
26	WG8-0323-000		2	PHOTO INTERRUPTER	
27	RA1-7570-000		1	MOUNT,SENSOR	
28	HS1-0231-000		1	GEAR,14T	
29	HA1-6671-000		1	SHAFT	
30	HA1-6658-000		1	HOLDER,SHAFT	
31	HS1-0228-000		1	GEAR,14/14T	
32	HS1-0229-000		1	GEAR,16T	

www.drukparts.pl

141. FIXING UNIT

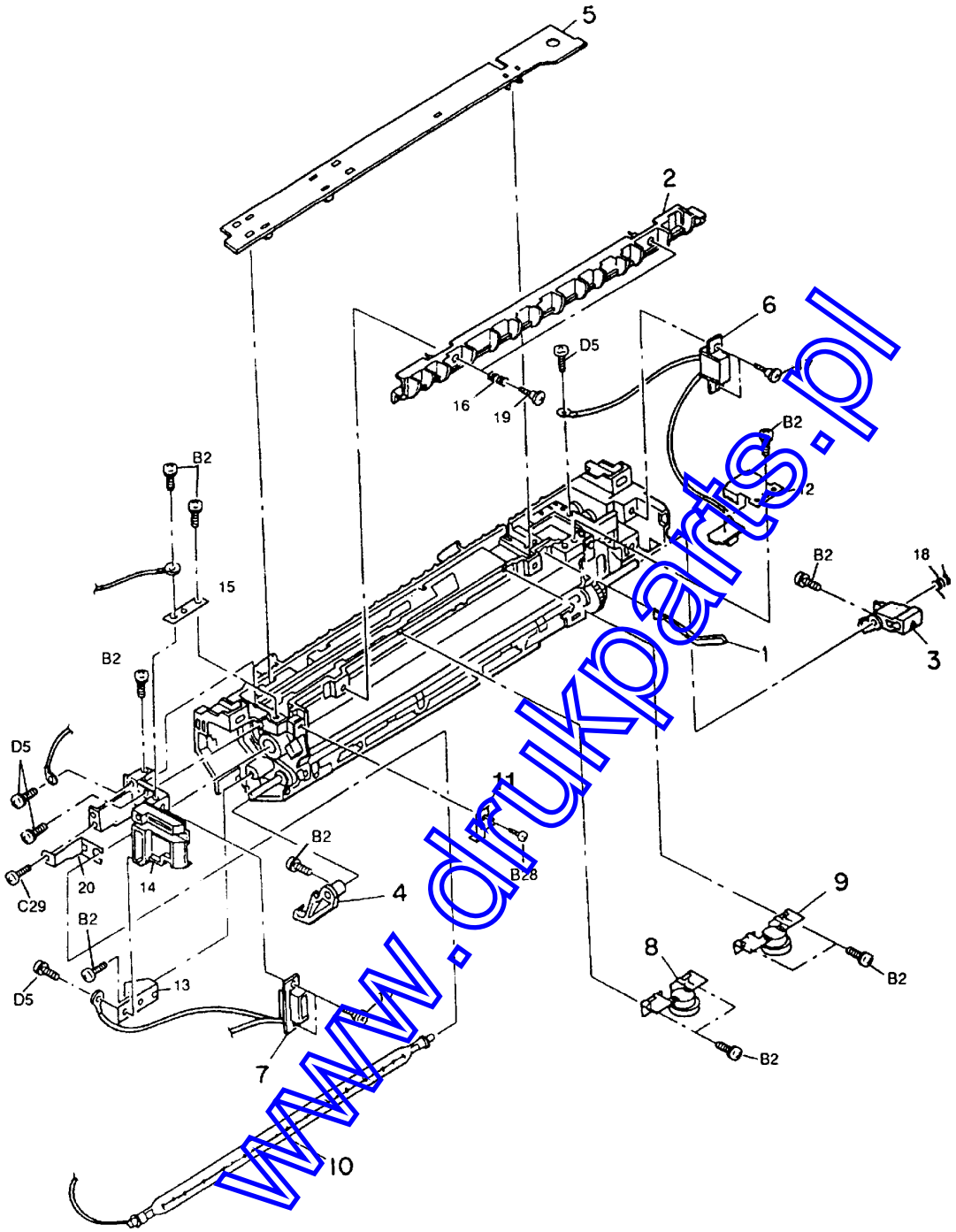

www.drukparts.pl

FIGURE & KEY NO.	PART NO.	RANK	Q'TY	DESCRIPTION	REMARKS
141	HG1-2539-000		1	FIXING UNIT	
1	HA1-6668-000		1	LEVER, DELIVERY SENSOR	
2	HF1-0680-000		1	GUIDE, PAPER DELIVERY	
3	RA1-7592-000		1	PLATE, HOOK, RIGHT	
4	RA2-0767-000		1	PLATE, HOOK, LEFT	
5	RA1-7610-050		1	COVER, WIRE	
6	RF1-2405-000		1	CABLE, THERMISTOR	
7	RF1-2427-000		1	CABLE, AC CONNECTOR	
8	RF1-2484-020		1	THERMO SWITCH (NOC)	
9	RF1-2483-020		1	THERMO SWITCH (CONT)	
10	RF1-3304-000		1	HEATER, HALOGEN	
11	HA1-7795-000		1	COVER, HEATER HALOGEN	
12	RA1-7602-000		1	SPRING,LEAF,THERMISTOR	
13	RA1-7619-000		1	PLATE,CONTINUTY 3	
14	RA1-7596-000		1	HOLDER,CONNECTOR,LEFT	
15	RA1-7617-000		1	PLATE,CONTINUTY 1	
16	HS1-2220-000		1	SPRING	
17	RA1-7636-000		1	SCREW,STEPPED,M3	
18	RA1-7607-000		1	SPRING,TORSION	
19	HA1-3697-000		2	SCREW	
20	RA1-7585-000		1	SPRING,LEAF	

www.drukparts.pl

150. INTERNAL COVER ASSEMBLY

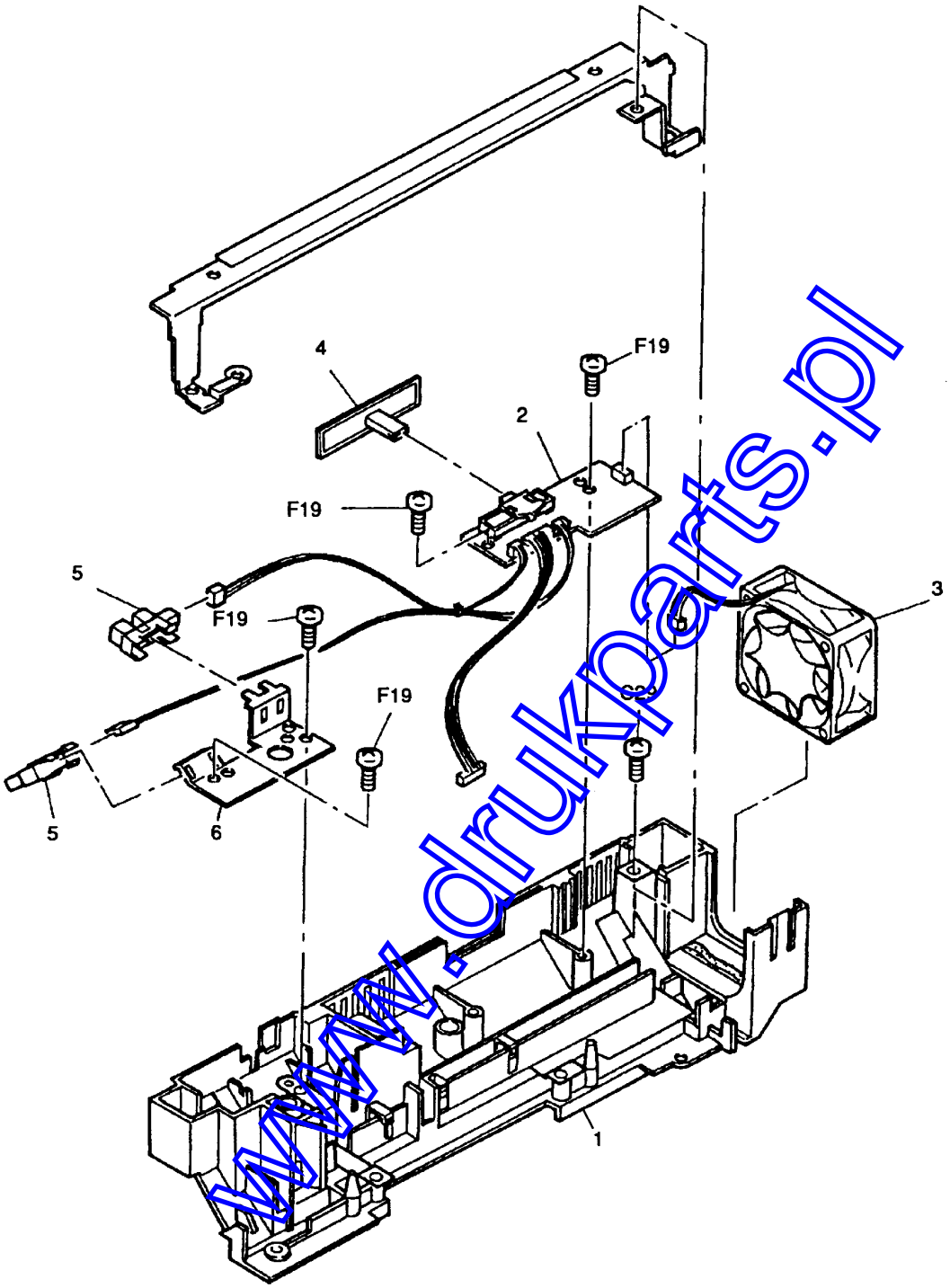

www.drukparts.pl

FIGURE & KEY NO.	PART NO.	RANK	Q'TY	DESCRIPTION	REMARKS
150	HG1-3287-000		RF	INTERNAL COVER ASSEMBLY	
1	RF1-2501-000		1	COVER,INNER	
2	HG1-2518-000		1	DENSITY ADJUSTING CARD UNIT	
3	HH7-1581-000		1	FAN, CF60-T219NID	
4	RA1-7457-000		1	PRINT DENSITY SLIDER	
5	WG8-0291-000		2	PHOTO INTERRUPTER	
6	RA1-7455-000		1	PLATE,MOUNTING,SENSOR	

www.drukparts.pl

160. UPPER COVER UNIT

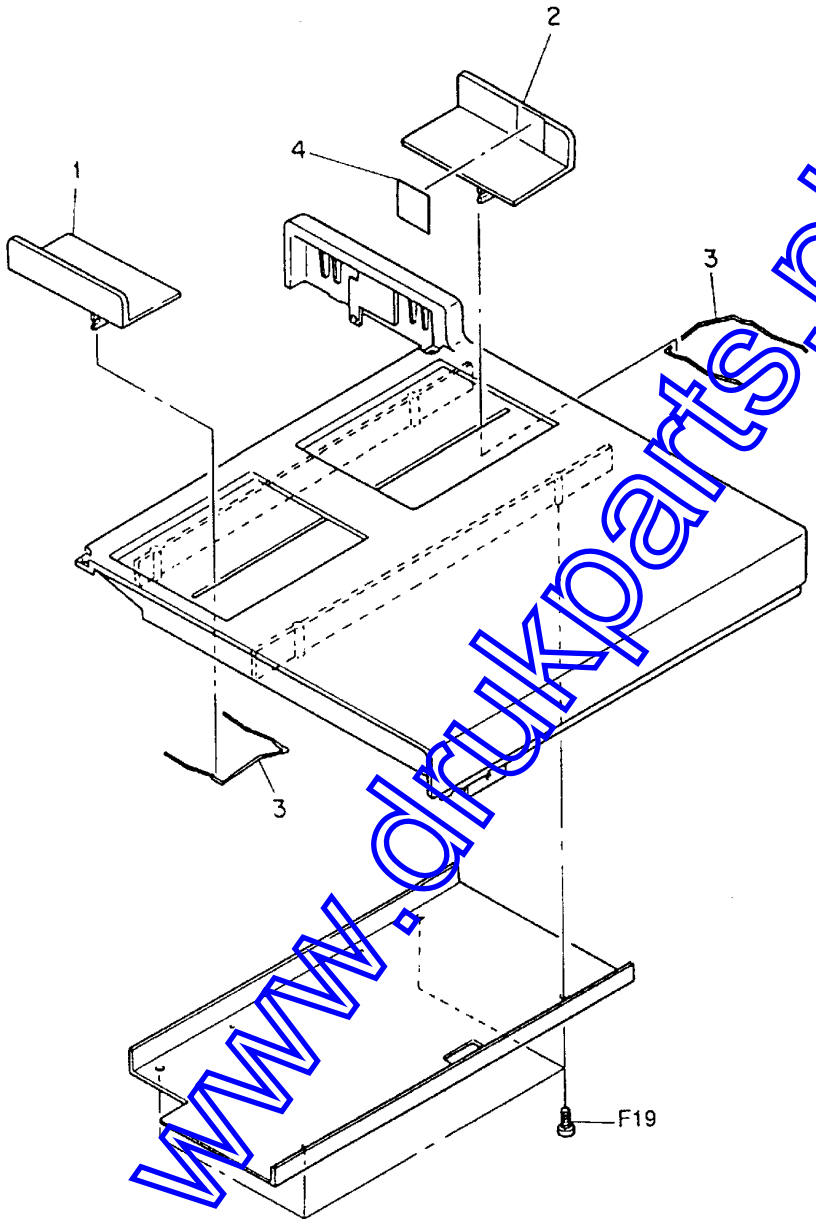

www.drukparts.pl

FIGURE & KEY NO.	PART NO.	RANK	Q'TY	DESCRIPTION	REMARKS
160	HG1-3969-000		1	COVER UNIT,UPPER	
1	HA1-6571-000		1	DOCUMENT GUIDE (LEFT)	
2	HA1-6572-000		1	DOCUMENT GUIDE (RIGHT)	
3	HA1-6597-000		2	STOPPER, DOCUMENT GUIDE	
4	HA1-6598-000		1	STICKER	

www.drukparts.pl

170. CASSETTE FEEDER UNIT

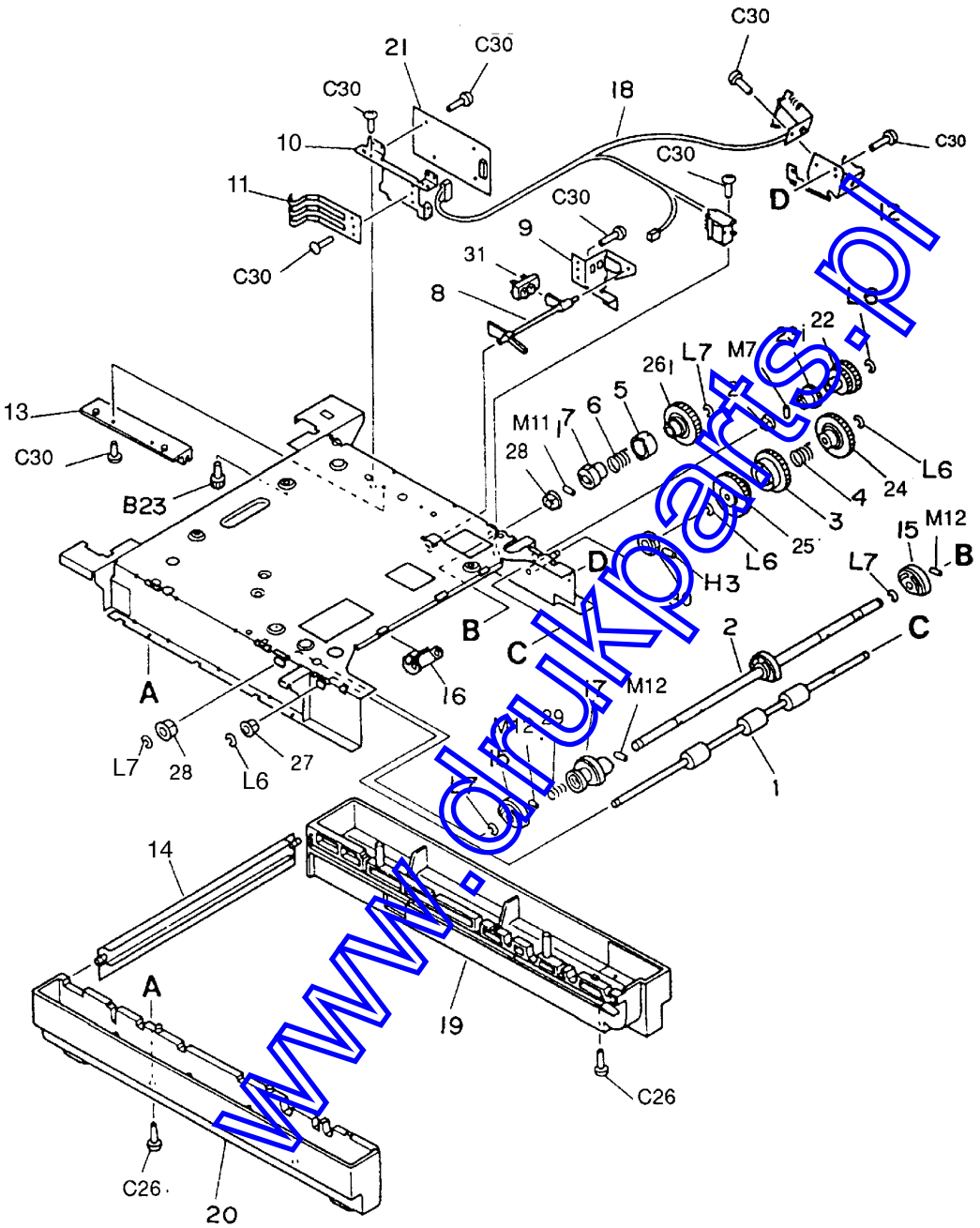

www.drukparts.pl

FIGURE & KEY NO.	PART NO.	RANK	Q'TY	DESCRIPTION	REMARKS
170	NPN		RF	CASSETTE FEEDER UNIT	
1	RA1-7654-000		1	SHAFT, FEED ROLLER	
2	RA1-7655-000		1	SHAFT, PICK-UP ROLLER	
3	RA1-7656-000		1	RING, RATCHET, A	
4	RA1-7657-000		1	SPRING, CLUTCH, A	
5	RA1-7658-000		1	RING, RATCHET, B	
6	RA1-7659-000		1	SPRING, CLUTCH, B	
7	RA1-7660-000		1	RING	
8	RA1-7661-000		1	ARM, SENSING	
9	RA1-7662-000		1	MOUNT, SENSOR	
10	RA1-7663-000		1	MOUNT, PCB	
11	RA1-7664-000		1	SPRING, LEAF	
12	RA1-7665-000		1	MOUNT, SOLENOID	
13	RA1-7666-000		1	GUIDE, CASSETTE	
14	RA1-7668-000		1	COVER, STOP	
15	RA1-7674-000		3	ROLLER, PICK-UP	
16	RA1-7821-000		3	GUIDE, ROLLER	
17	RA1-7824-000		1	ROLLER, PICK-UP	
18	RF1-2406-000		1	CABLE	
19	RF1-2418-000		1	COVER, FEEDER, RIGHT	
20	RF1-2419-000		1	COVER, FEEDER, LEFT	
21	RG1-1596-000		1	CASSETTE FEEDER PCB ASSEMBLY	
22	RS1-0295-000		1	GEAR, 33T/19T	
23	RS1-0296-000		1	GEAR, 17T	
24	RS1-0297-000		1	GEAR, 37T	
25	RS1-0298-000		1	GEAR, 39T	
26	RS1-0299-000		1	GEAR, 34T	
27	RS1-1053-000		2	BUSHING	
28	RS1-1054-000		2	BUSHING	
29	RS1-2254-000		1	SPRING, COMPRESSION	
30	RS1-6047-000		1	COLLAR, RETAINING	
31	WG8-0291-000		1	PHOTO INTERRUPTER	

www.drukparts.pl

180. CASSETTE 250 (A4)

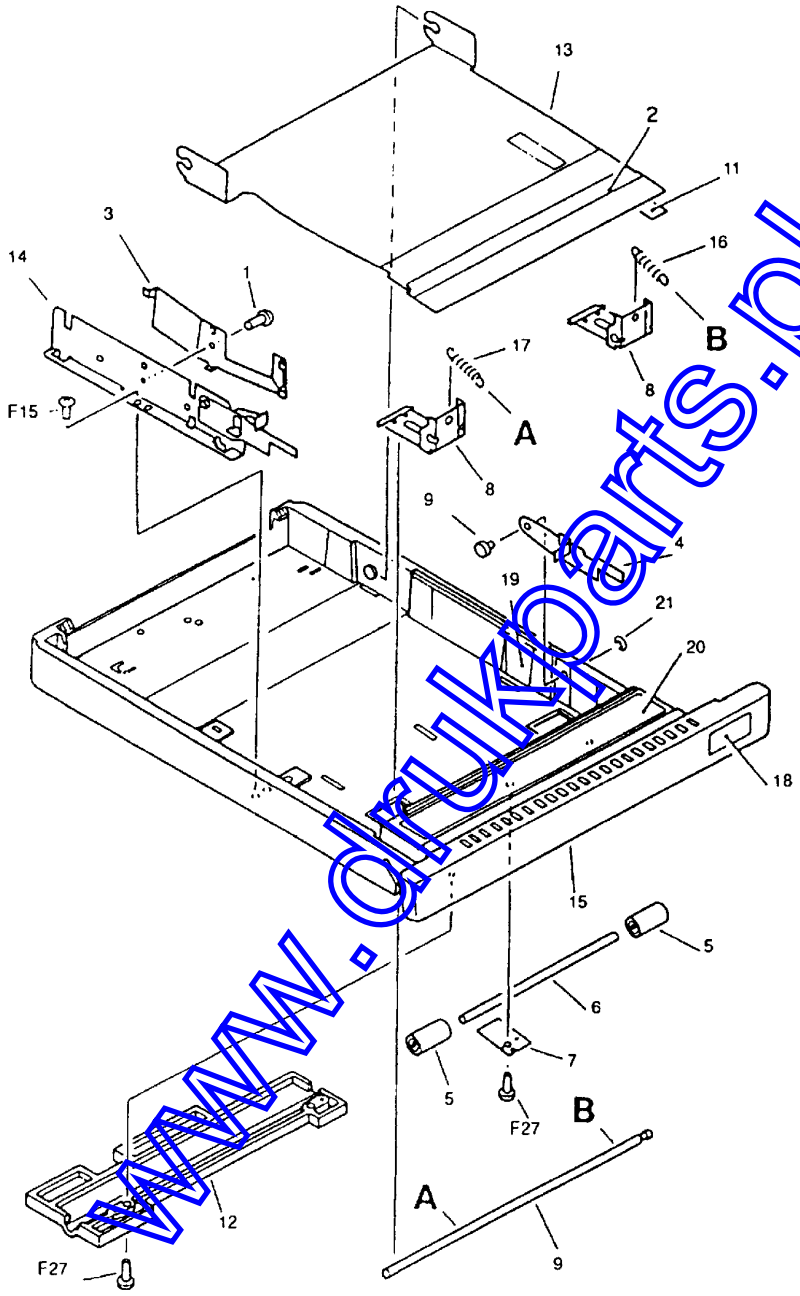

www.drukparts.pl

FIGURE & KEY NO.	PART NO.	RANK	Q'TY	DESCRIPTION	REMARKS
180	NPN		RF	CASSETTE 250 (A4)	
1	FB1-2267-000		1	SCREW, MACH., TRUSS HEAD, M3X4	
2	RA1-7689-000		1	SHEET, FRICTION	
3	RA1-7696-000		1	SPRING, LEAF	
4	RA1-7698-000		1	PLATE, CLAW	
5	RA1-7699-000		2	ROLLER	
6	RA1-7700-000		1	ROD, ROLLER	
7	RA1-7701-000		2	SPRING, LEAF	
8	RA1-7702-000		2	PLATE	
9	RA1-7703-000		1	ROD	
10	RA1-7704-000		1	PIVOT	
11	RA1-7706-000		2	SHEET	
12	RA1-8241-000	N	1	COVER, CASSETTE	
13	RF1-2422-000		1	PLATE, PAPER LIFTING	
14	RF1-2426-000		1	PLATE, SIZE	
15	RF1-2435-000	N	1	BODY, CASSETTE	
16	RS1-2251-000		1	SPRING, TENSION	
17	RS1-2252-000		1	SPRING, TENSION	
18	RS1-8795-000		1	LABEL, SIZE	
19	RS1-8805-000		1	LABEL	
20	RS1-8836-000		1	LABEL	
21	XD9-0101-000		1	RING, E	

www.drukparts.pl

190. OPERATION PANEL UNIT

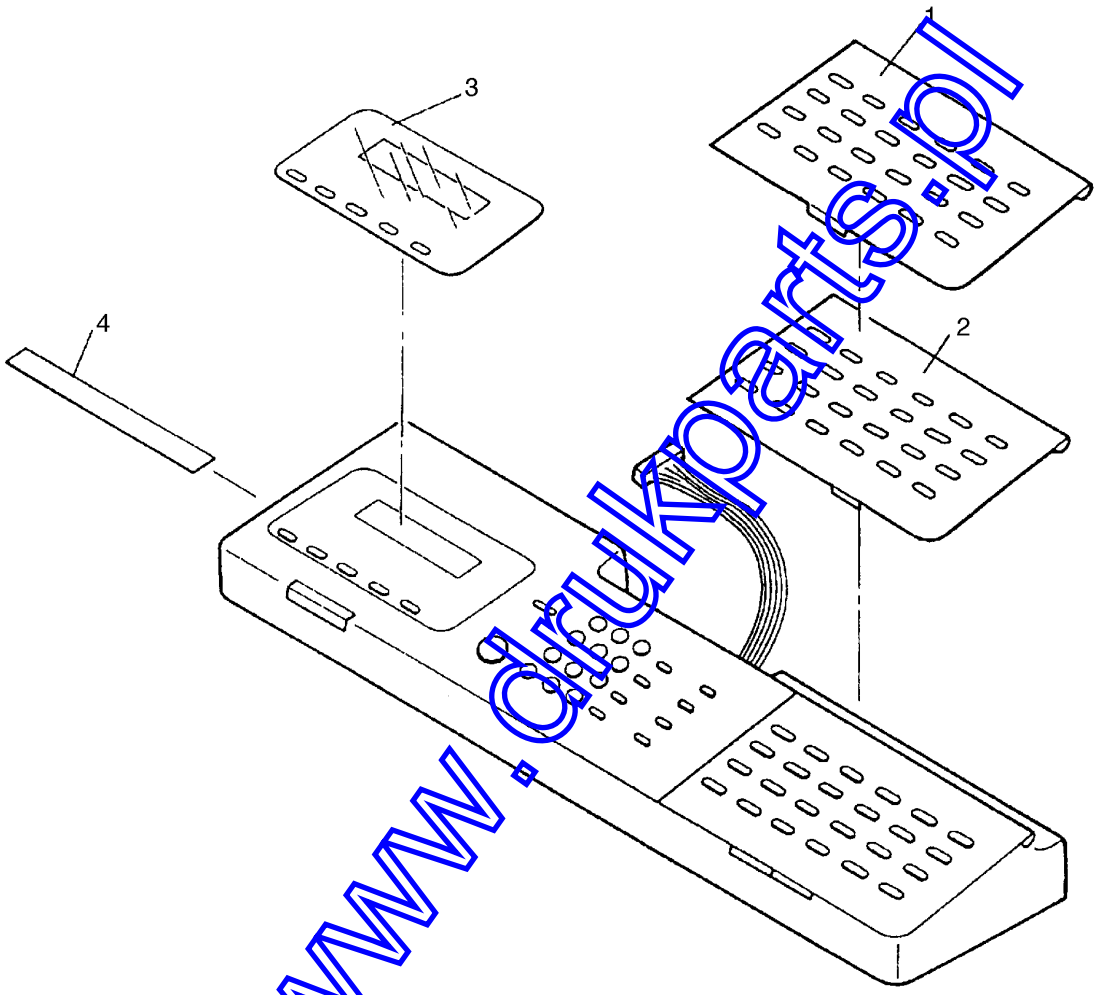

www.drukparts.pl

FIGURE & KEY NO.	PART NO.	RANK	Q'TY	DESCRIPTION	REMARKS
190	HH7-1954-000		1	OPERATION PANEL UNIT	
1	HY7-2576-000		1	COVER, ONE-TOUCH DIAL (1)	
2	HY7-2577-000		1	COVER, ONE-TOUCH DIAL (2)	
3	HY7-2570-000		1	DISPLAY PANEL	
4	HY7-2599-000		1	FUNCTION SHEET	

www.drukparts.pl

200. WIRING

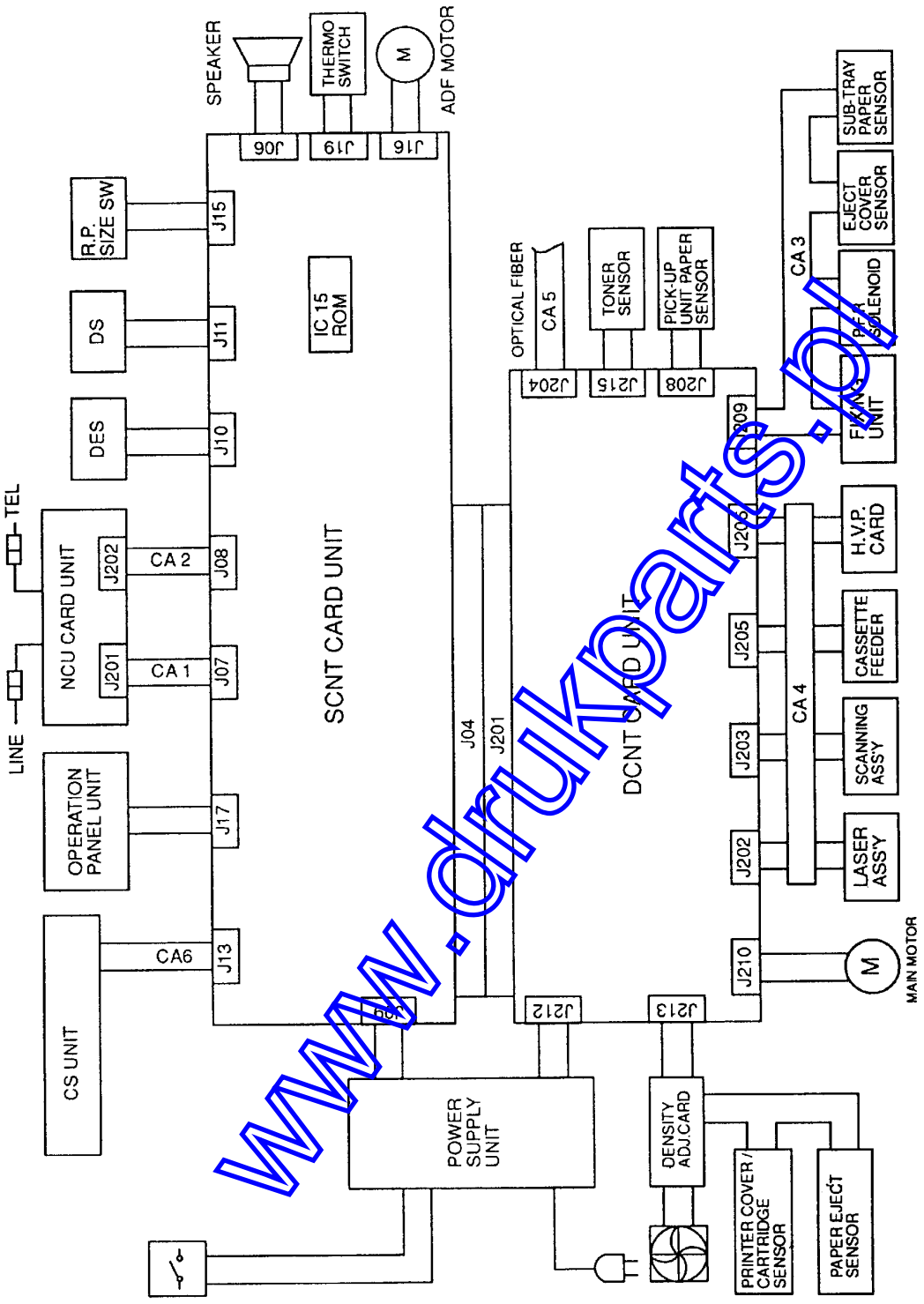

www.drukparts.pl

FIGURE & KEY NO.	PART NO.	RANK	Q'TY	DESCRIPTION	REMARKS
200	NPN			WIRING	
CA1	HH2-1719-000		1	CABLE WITH CONNECTOR,7P	
CA2	HH2-1720-000		1	CABLE WITH CONNECTOR,15P	
CA3	RG1-1608-000		1	CABLE ASS'Y	
CA4	RG1-1609-000		1	REAR CABLE ASSEMBLY	
CA5	RH2-5104-000		1	OPTICAL FIBER CABLE	
CA6	HH2-1715-000		1	CABLE WITH CONNECTOR	
IC15	HH4-2328-001		1	EPROM AM27C040-150DC	

www.drukparts.pl

SCREW & WASHER LIST

FIGURE & KEY NO.	PART NO.	RANK	Q'TY	DESCRIPTION	REMARKS
1993-03	NPN		RF	SCREW & WASHER LIST	
A 1	XA1-1170-409		AR	SCREW, PH1.7X4	
A 2	XA1-1170-605		AR	SCREW, PH1.7X6	
A 3	XA1-1261-207		AR	SCREW, PH2.6X12	
A 4	XA1-6200-257		AR	SCREW, PH2X2.5	
B 1	XA9-0194-000		AR	SCREW WITH WASHER, PH3X6	
B 2	XA9-0233-000		AR	SCREW, M3X6	
B 3	XA9-0259-000		AR	SCREW, TRUSS HEAD M3X8	
B 4	XA9-0277-000		AR	SCREW WITH WASHER, PH3X6	
B 5	XA9-0283-000		AR	SCREW, TP, PH3X6	
B 6	XA9-0289-000		AR	SCREW, BH3X7.2	
B 7	XA9-0290-000		AR	SCREW, BH3X13	
B 8	XA9-0329-000		AR	SCREW WITH WASHER, PH3X10	
B 9	XA9-0340-000		AR	SCREW, BH2.3X8	
B10	XA9-0342-000		AR	SCREW, BH3X7.5	
B11	XA9-0375-000		AR	SCREW WITH WASHER, PH3X25	
B12	XA9-0384-000		AR	SCREW, M3	
B13	XA9-0385-000		AR	SCREW WITH WASHER, M3X6	
B14	XA9-0390-000		AR	SCREW, FTH3X4	
B15	XA9-0397-000		AR	SCREW, TP, M3X6	
B16	XA9-0428-000		AR	SCREW, PH6X8	
B17	XA9-0429-000		AR	SCREW	
B18	XA9-0433-000		AR	SCREW, PH5.1X25	
B19	XA9-0459-000		AR	SCREW, TRUSS HEAD M3X16	
B20	XA9-0462-000		AR	SCREW, TRUSS HEAD M3X10	
B21	XA9-0476-000		AR	SCREW, TP, M3X8	
B22	XA9-0492-000		AR	SCREW, BH4X20	
B23	XA9-0494-000		AR	SCREW, M3	
B24	XA9-0530-000		AR	SCREW, M3X5	
B25	XA9-0531-000		AR	SCREW WITH WASHER, M3X16	
B26	XA9-0563-000		AR	SCREW, TP, M3X3	
B27	XA9-0602-000		AR	SCREW, BH2.5X3	
B28	XA9-0267-000		AR	SCREW, TP, M3X6	
C 1	XB1-1200-807		AR	SCREW, PH2X8	
C 2	XB1-1230-809		AR	SCREW, PH2.3X8	
C 3	XB1-1231-009		AR	SCREW, PH2.3X10	
C 4	XB1-1260-809		AR	SCREW, PH2.6X8	
C 5	XB1-1300-605		AR	SCREW, PH3X6	
C 6	XB1-1300-805		AR	SCREW, PH3X8	
C 7	XB1-2200-309		AR	SCREW, BH2X3	
C 8	XB1-2200-409		AR	SCREW, BH2X4	
C 9	XB1-2200-507		AR	SCREW, BH2X5	
C10	XB1-2200-509		AR	SCREW, BH2X5	
C11	XB1-2200-609		AR	SCREW, BH2X6	
C12	XB1-2200-805		AR	SCREW, BH2X8	

www.gruparts.pl

FIGURE & KEY NO.	PART NO.	RANK	Q'TY	DESCRIPTION	REMARKS
C13	XB1-2200-807		AR	SCREW, BH2X8	
C14	XB1-2200-809		AR	SCREW, BH2X8	
C15	XB1-2201-009		AR	SCREW, BH2X10	
C16	XB1-2230-809		AR	SCREW, BH2.3X8	
C17	XB1-2260-407		AR	SCREW, BH2.6X4	
C18	XB1-2260-607		AR	SCREW, BH2.6X6	
C19	XB1-2260-609		AR	SCREW, BH2.6X6	
C20	XB1-2300-405		AR	SCREW, BH3X4	
C21	XB1-2300-406		AR	SCREW, BH3X4	
C22	XB1-2300-407		AR	SCREW, BH3X4	
C23	XB1-2300-409		AR	SCREW, BH3X4	
C24	XB1-2300-505		AR	SCREW, BH3X5	
C25	XB1-2300-507		AR	SCREW, BH3X5	
C26	XB1-2300-603		AR	SCREW, BH3X6	
C27	XB1-2300-605		AR	SCREW, BH3X6	
C28	XB1-2300-606		AR	SCREW, BH3X6	
C29	XB1-2300-607		AR	SCREW, BH3X6	
C30	XB1-2300-609		AR	SCREW, BH3X6	
C31	XB1-2300-805		AR	SCREW, BH3X8	
C32	XB1-2300-807		AR	SCREW, BH3X8	
C33	XB1-2300-809		AR	SCREW, BH3X8	
C34	XB1-2301-007		AR	SCREW, BH3X10	
C35	XB1-2301-009		AR	SCREW, BH3X10	
C36	XB1-2301-205		AR	SCREW, BH3X12	
C37	XB1-2301-207		AR	SCREW, BH3X12	
C38	XB1-2301-209		AR	SCREW, BH3X12	
C39	XB1-2301-406		AR	SCREW, BH3X14	
C40	XB1-2301-605		AR	SCREW, BH3X16	
C41	XB1-2301-607		AR	SCREW, BH3X16	
C42	XB1-2301-609		AR	SCREW, BH3X16	
C43	XB1-2302-005		AR	SCREW, BH3X20	
C44	XB1-2302-009		AR	SCREW, BH3X20	
C45	XB1-2303-005		AR	SCREW, BH3X30	
C46	XB1-2400-405		AR	SCREW, BH4X4	
C47	XB1-2400-409		AR	SCREW, BH4X4	
C48	XB1-2400-604		AR	SCREW, BH4X6	
C49	XB1-2400-605		AR	SCREW, BH4X6	
C50	XB1-2400-606		AR	SCREW, BH4X6	
C51	XB1-2400-607		AR	SCREW, BH4X6	
C52	XB1-2400-609		AR	SCREW, BH4X6	
C53	XB1-2400-805		AR	SCREW, BH4X8	
C54	XB1-2400-806		AR	SCREW, BH4X8	
C55	XB1-2400-807		AR	SCREW, BH4X8	
C56	XB1-2401-005		AR	SCREW, BH4X10	
C57	XB1-2401-007		AR	SCREW, BH4X10	

www.orukparts.pl

FIGURE & KEY NO.	PART NO.	RANK	Q'TY	DESCRIPTION	REMARKS
C58	XB1-2401-009		AR	SCREW, BH4X10	
C59	XB1-2401-205		AR	SCREW, BH4X12	
C60	XB1-2401-207		AR	SCREW, BH4X12	
C61	XB1-2403-009		AR	SCREW, BH4X30	
C62	XB1-2501-005		AR	SCREW, BH5X10	
C63	XB1-3300-409		AR	SCREW, FTH3X4	
C64	XB1-3300-606		AR	SCREW, FTH3X6	
C65	XB1-3300-607		AR	SCREW, FTH3X6	
C66	XB1-3300-609		AR	SCREW, FTH3X6	
C67	XB1-7300-805		AR	SCREW, BH3X8	
D 1	XB2-3300-507		AR	SCREW WITH WASHER, PH3X5	
D 2	XB2-3300-607		AR	SCREW WITH WASHER, PH3X6	
D 3	XB2-3300-807		AR	SCREW WITH WASHER, PH3X8	
D 4	XB2-5300-607		AR	SCREW WITH WASHER, PH3X6	
D 5	XB2-7300-607		AR	SCREW WITH WASHER, PH3X6	
D 6	XB2-7300-807		AR	SCREW WITH WASHER, PH3X8	
D 7	XB2-8300-607		AR	SCREW WITH WASHER, PH3X6	
E 1	XB3-1200-605		AR	SCREW, BH2X6	
E 2	XB3-2260-509		AR	SCREW, BH2.6X5	
E 3	XB3-2300-805		AR	SCREW, BH3X8	
E 4	XB3-2301-005		AR	SCREW, BH3X10	
E 5	XB3-2400-805		AR	SCREW, BH4X8	
F 1	XB4-6300-607		AR	SCREW, TAP, PH3X6	
F 2	XB4-6300-809		AR	SCREW, TAP, PH3X8	
F 3	XB4-7200-505		AR	SCREW, TAP, BH2X5	
F 4	XB4-7200-609		AR	SCREW, TAP, BH2X6	
F 5	XB4-7200-805		AR	SCREW, TAP, BH2X8	
F 6	XB4-7200-809		AR	SCREW, TAP, BH2X8	
F 7	XB4-7201-009		AR	SCREW, TAP, BH2X10	
F 8	XB4-7201-207		AR	SCREW, TAP, BH2X12	
F 9	XB4-7260-607		AR	SCREW, TAP, BH2.6X6	
F10	XB4-7260-609		AR	SCREW, TAP, BH2.6X6	
F11	XB4-7260-807		AR	SCREW, TAP, BH2.6X8	
F12	XB4-7260-809		AR	SCREW, TAP, BH2.6X8	
F13	XB4-7300-509		AR	SCREW, TAP, BH3X5	
F14	XB4-7300-605		AR	SCREW, TAP, BH3X6	
F15	XB4-7300-607		AR	SCREW, TAP, BH3X6	
F16	XB4-7300-609		AR	SCREW, TAP, BH3X6	
F17	XB4-7300-805		AR	SCREW, TAP, BH3X8	
F18	XB4-7300-807		AR	SCREW, TAP, BH3X8	
F19	XB4-7300-809		AR	SCREW, TAP, BH3X8	
F20	XB4-7301-005		AR	SCREW, TAP, BH3X10	
F21	XB4-7301-007		AR	SCREW, TAP, BH3X10	
F22	XB4-7301-009		AR	SCREW, TAP, BH3X10	
F23	XB4-7301-209		AR	SCREW, TAP, BH3X12	

www.ukparts.pl

FIGURE & KEY NO.	PART NO.	RANK	Q'TY	DESCRIPTION	REMARKS
F24	XB4-7301-407		AR	SCREW, TAP, BH3X14	
F25	XB4-7400-607		AR	SCREW, TAP, BH4X6	
F26	XB4-7400-609		AR	SCREW, TAP, BH4X6	
F27	XB4-7400-807		AR	SCREW, TAP, BH4X8	
F28	XB4-7400-809		AR	SCREW, TAP, BH4X8	
F29	XB4-7401-007		AR	SCREW, TAP, BH4X10	
F30	XB4-7401-009		AR	SCREW, TAP, BH4X10	
G 1	XB5-6300-807		AR	SCREW, TP, PH3X8	
G 2	XB5-2300-609		AR	SCREW, TP, BH3X6	
H 1	XB6-1300-408		AR	SCREW, FP SET, SH3X4	
H 2	XB6-1300-409		AR	SCREW, FP SET, SH3X4	
H 3	XB6-2300-408		AR	SCREW, FP SET, SH3X4	
H 4	XB6-2300-409		AR	SCREW, FP SET, SH3X4	
H 5	XB6-2300-609		AR	SCREW, FP SET, SH3X6	
H 6	XB6-2300-807		AR	SCREW, FP SET, SH3X8	
H 7	XB6-2301-607		AR	SCREW, FP SET, SH3X16	
H 8	XB6-2400-408		AR	SCREW, FP SET, SH4X4	
H 9	XB6-2400-608		AR	SCREW, FP SET, SH4X6	
H10	XB6-6300-605		AR	SCREW WITH WASHER, PH3X6	
H11	XB6-6300-609		AR	SCREW WITH WASHER, PH3X6	
H12	XB6-7260-605		AR	SCREW, TP, PH2.6X6	
H13	XB6-7300-405		AR	SCREW, TP, PH3X4	
H14	XB6-7300-409		AR	SCREW, TP, PH3X4	
H15	XB6-7300-605		AR	SCREW, TP, PH3X6	
H16	XB6-7300-606		AR	SCREW, TP, PH3X6	
H17	XB6-7300-607		AR	SCREW, TP, PH3X6	
H18	XB6-7300-609		AR	SCREW, TP, PH3X6	
H19	XB6-7300-805		AR	SCREW, TP, PH3X8	
H20	XB6-7300-807		AR	SCREW, TP, PH3X8	
H21	XB6-7300-809		AR	SCREW, TP, PH3X8	
H22	XB6-7301-007		AR	SCREW, TP, PH3X10	
H23	XB6-7400-605		AR	SCREW, TP, PH4X6	
H24	XB6-7400-609		AR	SCREW, TP, PH4X6	
H25	XB6-7401-009		AR	SCREW, TP, PH4X10	
J 1	XB7-2100-405		AR	NUT M4	
J 2	XB7-2200-305		AR	NUT M3	
K 1	XD1-1103-139		AR	WASHER, SHIM M3.1	
K 2	XD1-1104-125		AR	WASHER, SHIM M4.1	
K 3	XD1-1104-139		AR	WASHER, SHIM M4.1	
K 4	XD1-1105-214		AR	WASHER, SHIM M5.2	
K 5	XD1-1106-231		AR	WASHER, SHIM M6.2	
K 6	XD1-1106-232		AR	WASHER, SHIM M6.2	
K 7	XD1-1109-715		AR	WASHER, SHIM M9.7	
K 8	XD1-2100-307		AR	WASHER, PLAIN M3	
K 9	XD1-2100-407		AR	WASHER, PLAIN M4	

www.anuparts.pl

FIGURE & KEY NO.	PART NO.	RANK	Q'TY	DESCRIPTION	REMARKS
K10	XD1-4100-302		AR	WASHER, TOOTHED, INNER M3	
K11	XD1-4100-402		AR	WASHER, TOOTHED, INNER M4	
K12	XD1-4200-302		AR	WASHER, TOOTHED, OUTER M3	
K13	XD1-4200-402		AR	WASHER, TOOTHED, LOCK M4	
L 1	XD2-1100-172		AR	WASHER, RETAINING 1.7MM	
L 2	XD2-1100-242		AR	WASHER, RETAINING 2.4MM	
L 3	XD2-1100-322		AR	WASHER, RETAINING 3.2MM	
L 4	XD2-1100-402		AR	WASHER, RETAINING 4.0MM	
L 5	XD2-1100-422		AR	WASHER, RETAINING 4.2MM	
L 6	XD2-1100-502		AR	WASHER, RETAINING 5.0MM	
L 7	XD2-1100-642		AR	WASHER, RETAINING 6.4MM	
L 8	XD2-1200-242		AR	WASHER, RETAINING 2.4MM	
L 9	XD2-1200-322		AR	WASHER, RETAINING 3.2MM	
L10	XD2-1200-502		AR	WASHER, RETAINING 5.0MM	
L11	XD2-1200-642		AR	WASHER, RETAINING 6.4MM	
L12	XD2-2100-602		AR	RING, GRIP 6.0MM	
L13	XD2-2300-302		AR	WASHER, RETAINING 3.0MM	
L14	XD2-2300-402		AR	WASHER, RETAINING 4.0MM	
L15	XD2-2300-502		AR	WASHER, RETAINING 5.0MM	
L16	XD2-2300-602		AR	WASHER, RETAINING 6.0MM	
L17	XD2-2300-802		AR	WASHER, RETAINING 8.0MM	
M 1	XD3-1160-162		AR	PIN, SPRING 1.6X16	
M 2	XD3-1200-102		AR	PIN, SPRING 2X10	
M 3	XD3-1300-142		AR	PIN, SPRING 3X14	
M 4	XD3-1300-162		AR	PIN, SPRING 3X16	
M 5	XD3-2100-082		AR	PIN, PARALLEL 1X8	
M 6	XD3-2100-602		AR	PIN, PARALLEL 1X60	
M 7	XD3-2160-082		AR	PIN, PARALLEL 1.6X8	
M 8	XD3-2200-082		AR	PIN, PARALLEL 2X8	
M 9	XD3-2200-102		AR	PIN, PARALLEL 2X10	
M10	XD3-2200-112		AR	PIN, PARALLEL 2X11	
M11	XD3-2200-122		AR	PIN, PARALLEL 2X12	
M12	XD3-2200-142		AR	PIN, PARALLEL 2X14	
M13	XD3-2200-162		AR	PIN, PARALLEL 2X16	
M14	XD3-2200-202		AR	PIN, PARALLEL 2X20	
M15	XD3-2200-252		AR	PIN, PARALLEL 2X25	
M16	XD3-2250-252		AR	PIN, PARALLEL 2.5X25	
M17	XD3-2300-082		AR	PIN, PARALLEL 3X8	
M18	XD3-2300-102		AR	PIN, PARALLEL 3X10	
M19	XD3-2300-122		AR	PIN, PARALLEL 3X12	
M20	XD3-2300-142		AR	PIN, PARALLEL 3X14	
M21	XD3-2300-162		AR	PIN, PARALLEL 3X16	
M22	XD3-2300-182		AR	PIN, PARALLEL 3X18	
M23	XD3-2300-252		AR	PIN, PARALLEL 3X25	

www.ourukparts.pl

NUMERICAL INDEX

PART NUMBER	FIGURE & KEY No.	DESCRIPTION
FB1-2267-000	180-1	SCREW, MACH., TRUSS HEAD, M3X4
FS1-9009-000	120-38	TWO-STEP SCREW, M3
HA1-3697-000	141-19	SCREW
HA1-4642-000	120-1	SUB ROLLER, EJECT
HA1-6552-000	100-1	REAR COVER
HA1-6553-000	100-2	SIDE COVER
HA1-6554-000	120-2	ADF COVER
HA1-6555-000	100-3	CONNECTOR COVER
HA1-6571-000	160-1	DOCUMENT GUIDE (LEFT)
HA1-6572-000	160-2	DOCUMENT GUIDE (RIGHT)
HA1-6576-000	110-8	SPEAKER HOLDER
HA1-6578-000	100-4	DOCUMENT TRAY
HA1-6579-000	100-5	EJECT PAPER TRAY
HA1-6580-000	100-6	EXTENSION TRAY
HA1-6581-000	100-7	ADDRESS LABEL
HA1-6589-000	100-21	MODULAR COVER
HA1-6591-000	100-8	FRONT COVER
HA1-6592-000	100-9	FRAME, OPERATION PANEL
HA1-6597-000	160-3	STOPPER, DOCUMENT GUIDE
HA1-6598-000	160-4	STICKER
HA1-6602-000	120-3	DOCUMENT GUIDE, LOWER
HA1-6603-000	120-4	ROLLER, DOCUMENT FEED
HA1-6604-000	120-5	ROLLER, DOCUMENT EJECT
HA1-6607-000	120-6	SHAFT, SUB SEPARATION ROLLER
HA1-6612-000	120-7	BRACKET, DOCUMENT TRAY
HA1-6613-000	120-8	HOOK LEVER
HA1-6614-000	120-9	SHAFT, HOOK LEVER
HA1-6615-000	120-40	GROUNDING PLATE 1
HA1-6616-000	120-41	GROUNDING PLATE 2
HA1-6621-080	120-39	DOCUMENT,GUIDE,UPPER
HA1-6631-000	120-10	SUB SEPARATION GUIDE
HA1-6632-000	120-11	SHAFT
HA1-6637-000	120-12	ACTUATOR, DS
HA1-6644-000	120-13	SHAFT, DOCUMENT PRESSURE
HA1-6648-000	120-14	RELEASE KNOB, ADF COVER
HA1-6658-000	140-30	HOLDER,SHAFT
HA1-6668-000	141-1	LEVER, DELIVERY SENSOR
HA1-6671-000	140-29	SHAFT
HA1-6683-000	140-1	SWITCH,CABEL,PAPER SIZE
HA1-6686-000	140-2	ACTUATOR, TU COVER SENSOR
HA1-7351-000	120-15	SEPARATION ROLLER
HA1-7352-000	120-16	SUB SEPARATION ROLLER
HA1-7612-000	100-11	PROTECT COVER
HA1-7795-000	141-11	COVER, HEATER HALOGEN
HA2-0145-000	100-10	COVER, ENTRY SW
HA2-0861-000	140-3	ROLLER, TRANSFER
HA2-1845-000	100-22	SHEET, REGISTRATION
HA9-0132-000	140-25	SPRING, COMPRESSION
HF1-0672-000	120-17	ADF FRAME UNIT
HF1-0673-000	120-18	PRESSURE PLATE, DOCUMENT
HF1-0677-000	140-4	EJECT GUIDE ROLLER
HF1-0680-000	141-2	GUIDE, PAPER DELIVERY
HG1-2346-000	120-19	DOCUMENT EDGE SENSOR
HG1-2351-000	140-5	RECORDING PAPER TRAY UNIT
HG1-2383-000	120-20	SEPARATION GUIDE
HG1-2386-000	140-6	EJECT ROLLER UNIT
HG1-2402-000	120-21	DOCUMENT SENSOR
HG1-2453-000	110-1	DCNT CARD UNIT
HG1-2518-000	150-2	DENSITY ADJUSTING CARD UNIT
HG1-2538-000	140	PRINTER COVER UNIT
HG1-2539-000	140-7	FIXING UNIT
	141	FIXING UNIT
HG1-2600-000	140-8	FIXING AC,PCB ASSEMBLY
HG1-3287-000	150	INTERNAL COVER ASSEMBLY
HG1-3317-000	120-22	DOCUMENT GUIDE UNIT (UPPER)
HG1-3483-000	120-23	ADF DRIVE UNIT
HG1-3663-000	120	ADF UNIT
HG1-3664-000	120-24	CONTRACT SENSOR UNIT
HG1-3811-001	100-12	SCNT CARD UNIT
HG1-3812-001	100-13	NCU CARD UNIT
HG1-3969-000	160	COVER UNIT,UPPER
HG9-0495-000	120-25	HOOK LEVER ASS'Y
HH2-1719-000	100-15	CABLE WITH CONNECTOR, 7P
	200-CA1	CABLE WITH CONNECTOR, 7P
HH2-1720-000	100-16	CABLE WITH CONNECTOR, 15P
	200-CA2	CABLE WITH CONNECTOR, 15P
HH2-1774-000	130-1	CABLE ASSEMBLY, 3 PIN
HH2-1811-000	120-42	GND,CABLE,CA19
HH2-2127-000	100-17	MODULAR ASSEMBLY
HH2-2128-000	100-18	MODULAR ASSEMBLY WITH CORE
HH2-2219-000	100-23	MODULAR JACK CORD
HH2-2254-000	100-14	POWER SUPPLY CORD
HH3-5249-000	110-2	POWER SUPPLY UNIT
HH4-2328-001	200-IC 15	EPROM AM27C040-150DC
HH7-1399-000	110-3	SPEAKER UNIT
HH7-1557-000	140-9	R.P. SIZE SWITCH
HH7-1576-000	130-2	TONER SENSOR
HH7-1581-000	150-3	FAN, CF60-T219NID
HH7-1954-000	100-19	OPERATION PANEL UNIT
HS1-0223-000	120-26	GEAR, 15T
HS1-0225-000	120-27	GEAR, 68T
HS1-0226-000	120-28	GEAR, 68/80T
HS1-0228-000	140-31	GEAR,14/14T
HS1-0229-000	140-32	GEAR,16T
HS1-0230-000	140-10	GEAR, 22T
HS1-0231-000	140-28	GEAR,14T
HS1-1017-000	120-29	BUSHING, 6MM
HS1-1030-000	120-30	BUSHING, 4MM
HS1-2033-000	120-31	SPRING, CLUTCH
HS1-2217-000	120-32	SPRING
HS1-2218-000	120-33	SPRING
HS1-2220-000	141-16	SPRING
HS1-2221-000	120-34	SPRING
HS1-2222-000	120-35	SPRING

www.drukoarts.pl

PART NUMBER	FIGURE & KEY No.	DESCRIPTION
HS1-3064-000	120-36	PULLY, 15T
HY7-2570-000	190-3	DISPLAY PANEL
HY7-2576-000	190-1	COVER, ONE-TOUCH DIAL (1)
HY7-2577-000	190-2	COVER, ONE-TOUCH DIAL (2)
HY7-2599-000	190-4	FUNCTION SHEET
RA1-7446-000	130-3	BLOCK, FIBER HOLDER
RA1-7455-000	150-6	PRATE,MOUNTING,SENSOR
RA1-7457-000	150-4	PRINT DENSITY SLIDER
RA1-7499-000	110-4	PIVOT
RA1-7502-000	130-4	COVER, CABLE
RA1-7506-000	130-5	COVER, CORD
RA1-7552-020	110-7	MOUNT,POSITIONING
RA1-7562-000	140-11	LEVER, PAPER SENSOR
RA1-7570-000	140-27	MOUNT,SENSOR
RA1-7585-000	141-20	SPRING,LEAF
RA1-7592-000	141-3	PLATE, HOOK, RIGHT
RA1-7596-000	141-14	HOLDER,CONNECTOR,LEFT
RA1-7602-000	141-12	SPRING,LEAF,THERMISTOR
RA1-7607-000	141-18	SPRING,TORSION
RA1-7610-050	141-5	COVER, WIRE
RA1-7617-000	141-15	PLATE,CONTINUITY 1
RA1-7619-000	141-13	PLATE,CONTINUITY 3
RA1-7628-000	140-12	CAP, SPRING
RA1-7629-000	140-13	ARM, PAPER PICK-UP
RA1-7632-000	140-14	COVER, CORD, FRONT
RA1-7636-000	141-17	SCREW,STEPPED,M3
RA1-7637-000	140-15	HOLDER, CORD
RA1-7654-000	170-1	SHAFT, FEED ROLLER
RA1-7655-000	170-2	SHAFT, PICK-UP ROLLER
RA1-7656-000	170-3	RING, RATCHET, A
RA1-7657-000	170-4	SPRING, CLUTCH, A
RA1-7658-000	170-5	RING, RATCHET, B
RA1-7659-000	170-6	SPRING, CLUTCH, B
RA1-7660-000	170-7	RING
RA1-7661-000	170-8	ARM, SENSING
RA1-7662-000	170-9	MOUNT, SENSOR
RA1-7663-000	170-10	MOUNT, PCB
RA1-7664-000	170-11	SPRING, LEAF
RA1-7665-000	170-12	MOUNT, SOLENOID
RA1-7666-000	170-13	GUIDE, CASSETTE
RA1-7668-000	170-14	COVER, STOP
RA1-7674-000	170-15	ROLLER, PICK-UP
RA1-7689-000	180-2	SHEET, FRICTION
RA1-7696-000	180-3	SPRING, LEAF
RA1-7698-000	180-4	PLATE, CLAW
RA1-7699-000	180-5	ROLLER
RA1-7700-000	180-6	ROD, ROLLER
RA1-7701-000	180-7	SPRING, LEAF
RA1-7702-000	180-8	PLATE
RA1-7703-000	180-9	ROD
RA1-7704-000	180-10	PIVOT
RA1-7706-000	180-11	SHEET
RA1-7718-000	140-16	SPRING, TORSION
RA1-7821-000	170-16	GUIDE, ROLLER
RA1-7824-000	170-17	ROLLER, PICK-UP
RA1-8241-000	180-12	COVER, CASSETTE
RA2-0767-000	141-4	PLATE, HOOK, LEFT
RF1-2385-000	130-6	CABLE, SENSOR
RF1-2400-000	140-17	PLATE, PAPER GUIDE
RF1-2405-000	141-6	CABLE, THERMISTOR
RF1-2406-000	170-18	CABLE
RF1-2418-000	170-19	COVER, FEEDER, RIGHT
RF1-2419-000	170-20	COVER, FEEDER, LEFT
RF1-2422-000	181-13	PLATE, PAPER LIFTING
RF1-2426-060	180-14	PLATE, SIZE
RF1-2427-000	141-7	CABLE, AC CONNECTOR
RF1-2435-000	181-15	BODY, CASSETTE
RF1-2436-000	180-16	BODY, CASSETTE
RF1-2483-020	141-9	THERMO SWITCH (CONT)
RF1-2484-020	141-8	THERMO SWITCH (NCC)
RF1-2501-000	150-1	COVER,INNER
RF1-3304-000	141-10	HEATER, HALOGEN
RG1-1596-000	170-21	CASSETTE FEEDER PCB ASSEMBLY
RG1-1608-000	140-18	CABLE ASS'Y
	200-CA3	CABLE ASS'Y
RG1-1609-000	130-7	REAR CABLE ASSEMBLY
	200-CA4	REAR CABLE ASSEMBLY
RG1-1769-020	130-8	LASER ASSEMBLY
RG1-1771-030	130-9	SCANNER MOTOR ASSEMBLY
RG1-1772-000	130-10	LENS ASSEMBLY
RG1-1773-060	130-11	SHUTTER ASSEMBLY
RG1-1776-000	130-12	DRIVE ASSEMBLY
RG1-1777-000	130-13	DRUM DRIVE ASSEMBLY
RG1-1778-000	130-14	FEEDER ASSEMBLY
RG1-1780-000	130-15	H.V. CONTACT ASSEMBLY
RG1-1791-030	130-16	ROD ASSEMBLY
RG1-1792-150	140-19	PICK-UP ROLLER ASS'Y
RG1-1793-000	140-20	LEFT TR ROLLER MOUNT ASS'Y
RG1-1794-000	140-21	RIGHT TR ROLLER MOUNT ASS'Y
RG1-1912-080	130-17	SEPARATION PAD UNIT
RG9-0681-000	140-22	TRANSFER GUIDE ASS'Y
RG9-0695-000	110-5	H.V. POWER SUPPLY CARD UNIT
RH2-5104-000	130-18	OPTICAL FIBER CABLE
	200-CA5	OPTICAL FIBER CABLE
RH7-1098-000	130-19	MOTOR, STEPPING, DC4W
RS1-0284-000	130-20	GEAR, 30T
RS1-0290-000	140-23	GEAR, 30T
RS1-0292-000	140-24	GEAR, 27T
RS1-0295-000	170-22	GEAR, 33T/19T
RS1-0296-000	170-23	GEAR, 17T
RS1-0297-000	170-24	GEAR, 37T
RS1-0298-000	170-25	GEAR, 39T
RS1-0299-000	170-26	GEAR, 34T
RS1-1048-000	130-21	BUSHING
RS1-1053-000	170-27	BUSHING
RS1-1054-000	170-28	BUSHING
RS1-2251-000	180-16	SPRING, TENSION
RS1-2252-000	180-17	SPRING, TENSION

www.dinkparts.pl

PART NUMBER	FIGURE & KEY No.	DESCRIPTION	PART NUMBER	FIGURE & KEY No.	DESCRIPTION
RS1-2254-000	170-29	SPRING, COMPRESSION			
RS1-6047-000	170-30	COLLAR, RETAINING			
RS1-8795-000	181-18	LABEL, SIZE			
RS1-8805-000	180-19	LABEL			
RS1-8836-000	180-20	LABEL			
WC1-0125-000	110-6	POWER SW			
WG8-0291-000	150-5	PHOTO INTERRUPTER			
	170-31	PHOTO INTERRUPTER			
WG8-0323-000	140-26	PHOTO INTERRUPTER			
WT2-5014-000	100-20	CABLE TIE			
XD9-0101-000	180-21	RING, E			
XF9-0035-000	120-37	COGGED BELT			

www.drukparts.pl

Canon

www.drukparts.pl

IMPRIME EN FRANCE

CANON FRANCE SEPTEMBRE 1993