PIXMA iX4000

PIXUS iX5000 / PIXMA iX5000

PARTS CATALOG

REVISION 0

1464B008AA	PIXMA iX4000/ 200V-240V(ASA HVT)	0532B012AA	PIXUS iX5000/ 100V-120V(JP)
1464B009AA	PIXMA iX4000/ 220V-240V(AU)	0532B008AA	PIXMA iX5000/ 200V-240(ASA HVT)
1464B010AA	PIXMA iX4000/ 1220V-240V(KR)	0532B009AA	PIXMA iX5000/ 220V-240V(AU)
1464B013AA	PIXMA iX4000/ 100V-120V(TW)	0532B010AA	PIXMA iX5000/ 220V-240V(KR)
1464B014AA	PIXMA iX4000/ 220V-240V(HK)	0532B013AA	PIXMA iX5000/ 100V-120V(TW)
1464B015AA	PIXMA iX4000/ 220V-240V(CN)	0532B015AA	PIXMA iX5000/ 220V-240V(CN)
1464B016AA	PIXMA iX4000/ 220V-240V(EU)	0532B016AA	PIXMA iX5000/ 200V-240V(EU)

www.drukparts.pl

Canon

FEB. 2006

QY8-31CP-000

COPYRIGHT © 2006 CANON INC. CANON PIXMA iX4000/PIXUS iX5000/PIXMA iX5000 0206 N 0.00-0

Application

This manual has been issued by Canon Inc. for qualified person to learn technical theory, installation, maintenance, and repair of products. This manual covers all localities where the products are sold. For this reason, there may be information in this manual that does not apply to your locality.

Corrections

This manual could include technical inaccuracies or typographical errors due to improvements or changes in the products. When changes occur in applicable products or in the content of this manual, Canon will release technical information as the need arises. In the event of major changes in the contents of this manual over a long or short period. Canon will issue a new editions of this manual. The following paragraph does not apply to any countries where such provisions are inconsistent with local low.

Trademarks

The product names and company names described in this manual are the registered trademarks of the individual companies.

Copyright

This manual is copyrighted with all rights reserved. Under the copyright laws, this manual may not be copied, reproduced or translated into another language, in whole or in part, without the written consent of Canon Inc.
Copyright © 2005 by Canon Inc.
CANON INC.
Inkjet Device Quality Assurance Div. 2
451, Tsukagoshi, 3-chome, Saiwai-ku, Kawasaki-shi, Kanagawa 212-8530, Japan

This manual was created under Microsoft® Windows® 2000.
Parts layout pictures were edited using Adobe® Photoshop® 7.0. KEY No. were created using Adobe® Illustrator®10.
HTML files were created using Microsoft® FrontPage® 2000.

www.drukparts.pl

ABOUT THIS MANUAL

A. ILLUSTRATION INDEX

For illustration index, the parts layout illustrations in this parts catalog are listed in abbreviated form in order of illustration number to identify the pages they appear on. To find an illustration of a part, see the ILLUSTRATION INDEX.

B. PARTS LAYOUT & PARTS LIST

Parts layout illustration

a) Parts search
Find a part from the parts layout illustration and find its key number from the parts list to identify the part number and name. For screws, nuts, washers, lock washers, pins, spacers, see SCREWS &WASHERS LIST.

Note: If parts have the same or similar shape but different specifications, their key number is assigned to several part numbers and names in the parts list.

b) Parts replacement procedure
To replace parts, the parts layout illustrations have figure numbers according to the disassembly procedure of the product. The parts that require careful work are shown the illustration.

Parts list

a) FIGURE & KEY No.
The FIGURE & KEY No. column corresponds to the key numbers assigned to the parts in the parts layout illustration.

b) PART NUMBER
The PART NUMBER column gives the part numbers corresponding to the key numbers. To order a part, indicate the part number clearly.

Note: Parts marked NPN are not service parts.

c) RANK
The service parts with N in the RANK column are order parts.

d) QTY
The QTY column gives the number of parts in the corresponding component layout illustration.

e) DESCRIPTION
The DESCRIPTION column gives the part names in English.
To order a part, indicate the part name, too.

C. OPTIONS & CONSUMABLES

These are illustrations and a list of units that can be used as optional consumable equipments.

D. SCREWS & WASHERS LIST

This is a list of screws, nuts, washers, lock washers, pins, and spacers.
The QTY column does not give the number of parts used.

E. TOOL LIST

This is a list of tools used for servicing products.

F. NUMERICAL INDEX

All the parts listed in this parts catalog are arranged in order of part number. You can identify part locations and names from the NUMERICAL INDEX.

Top

www.drukparts.pl

Contents

A. ILLUSTRATION INDEX

B. PARTS LAYOUT & PARTS LIST

FIGURE 1 PRINT HEAD & AC ADAPTER

FIGURE 2 OPERATION PANEL UNIT & MAIN CASE UNIT

FIGURE 3 BOTTOM CASE UNIT & INK ABSORBER

FIGURE 4 LOGIC BOARD ASS'Y

FIGURE 5 SHEET FEED UNIT

FIGURE 6 PURGE UNIT

FIGURE 7 PLATEN UNIT

FIGURE 8 CARRIAGE UNIT

FIGURE 9 PAPER FEED PART

C. OPTION & CONSUMABLES

D. SCREW & WASHER LIST

E. TOOL

F. NUMERICAL INDEX

www.drukparts.pl

A. ILLUSTRATION INDEX

Contents NUMERICAL INDEX

FIGURE 1 PRINT HEAD & AC ADAPTER

FIGURE 2 OPERATION PANEL UNIT & MAIN CASE UNIT

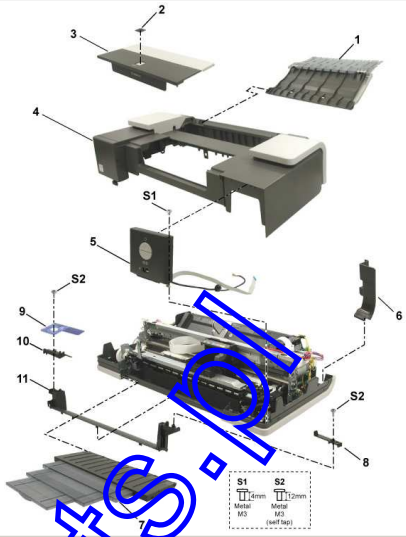

FIGURE 3 BOTTOM CASE UNIT & INK ABSORBER

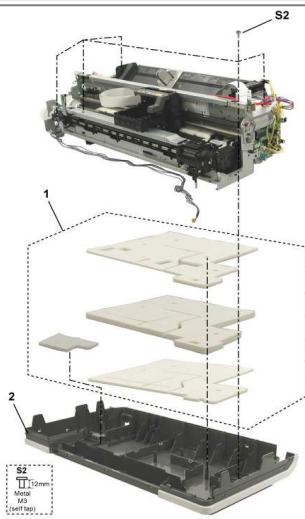

FIGURE 4 LOGIC BOARD ASS'Y

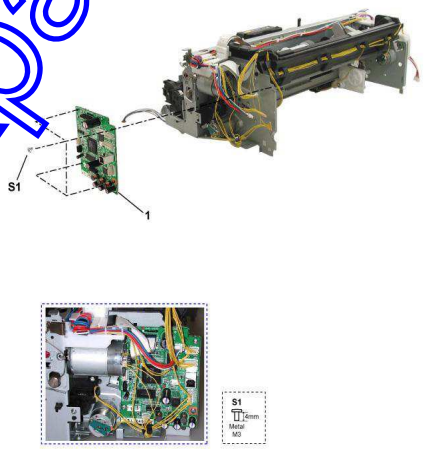

FIGURE 5 SHEET FEED UNIT

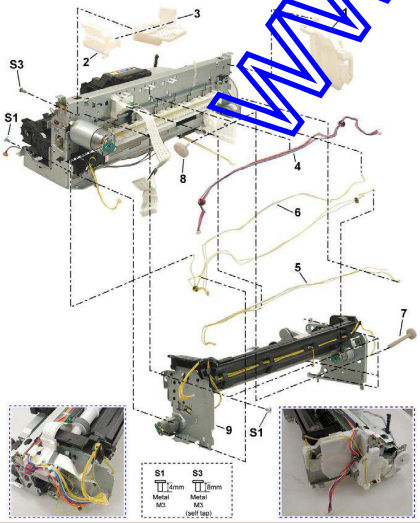

FIGURE 6 PURGE UNIT

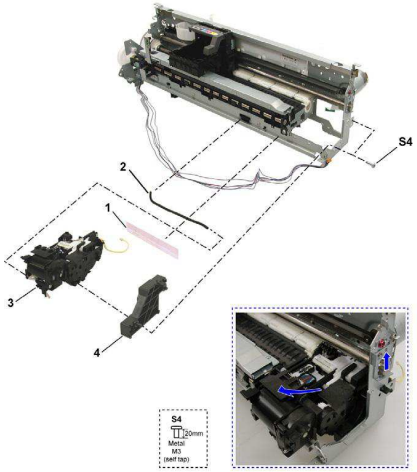

www.drukparts.pl

FIGURE 7 PLATEN UNIT

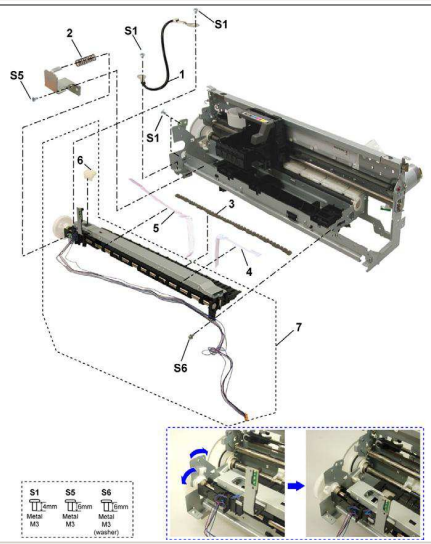

FIGURE 8 CARRIAGE UNIT

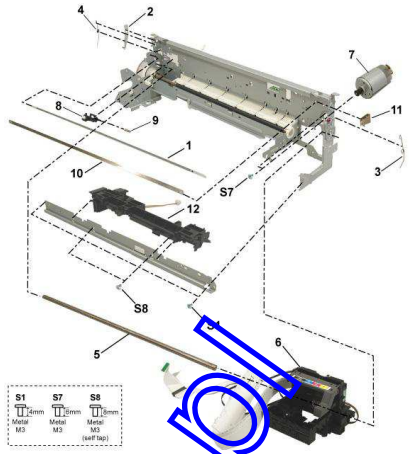

FIGURE 9 PAPER FEED PART

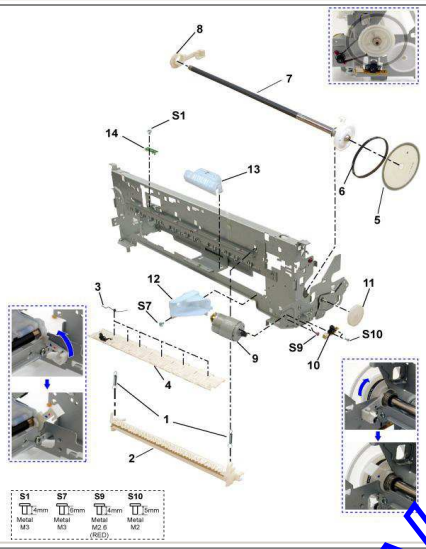

FIGURE 10 OPTION & CONSUMABLES

FIGURE 11 TOOL

www.drukparts.pl

This page intentionally left blank

www.drukparts.pl

FIGURE 1 PRINT HEAD & AC ADAPTER

www.drukparts.pl

FIGURE & KEY No.		PART NUMBER	RANK	QTY	DESCRIPTION	REMARKS
1 -	1	QY6-0064-000		1	PRINT HEAD	
	2	QK1-0279-000		1	CORD, POWER	220V-240V
		QK1-0286-000		1	CORD, POWER	100V-120V(JP)
		QK1-1061-000		1	CORD, POWER	220V-240V(AU)
		QK1-2017-000		1	CORD, POWER	100V-120V(TW)
		WT3-5156-000		1	CORD, POWER	220V-240V(GB, HK)
		WT3-5160-000		1	CORD, POWER	220V-240V(KR)
		WT3-5182-000		1	CORD, POWER	220V-240V(CHN)
	3	QK1-2048-000		1	AC ADAPTER: 100V-240V 50/60HZ	

www.drukparts.pl

FIGURE 2 OPERATION PANEL UNIT & MAIN CASE UNIT

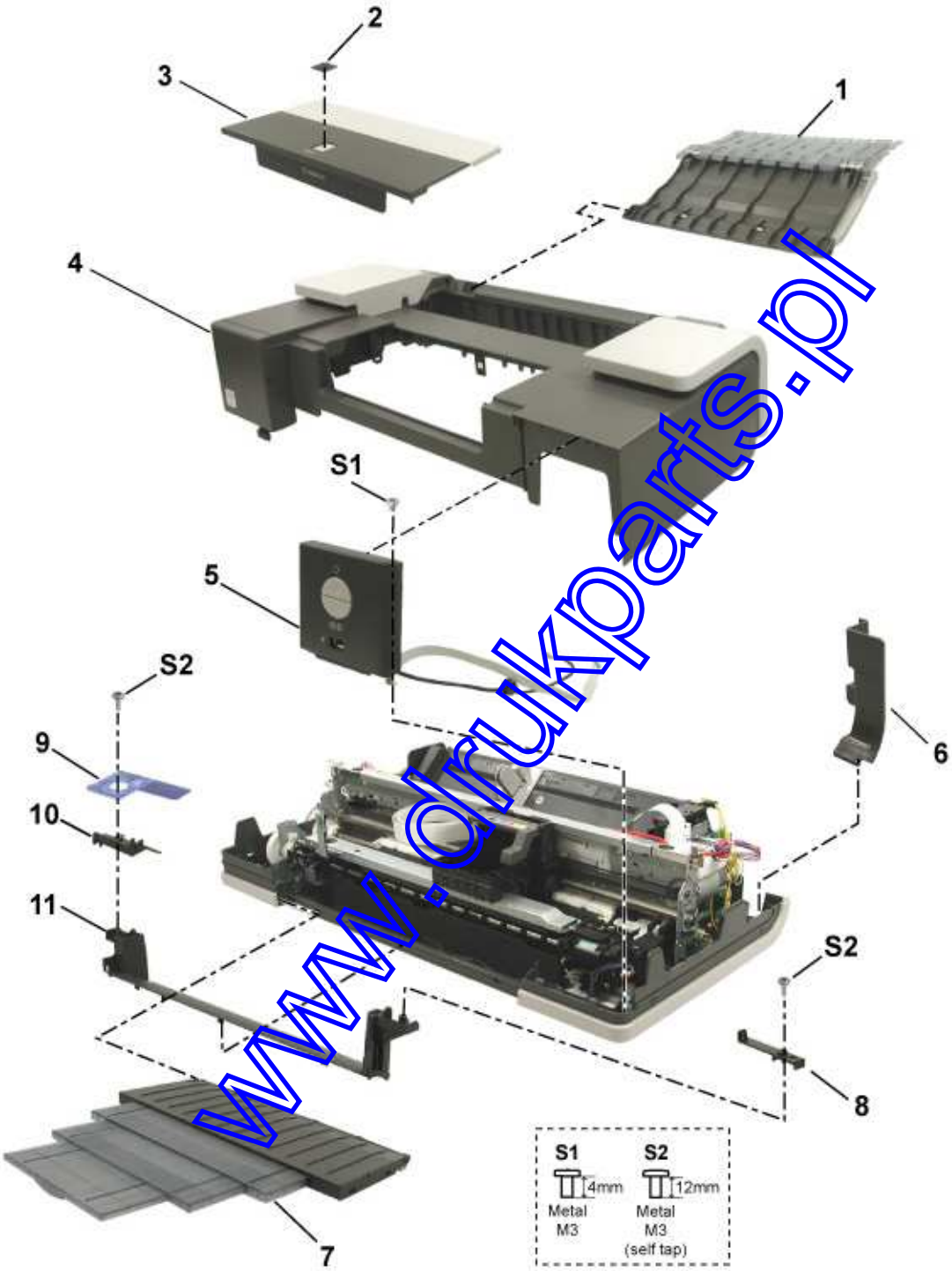

www.drukparts.pl

FIGURE & KEY No.		PART NUMBER	RANK	QTY	DESCRIPTION	REMARKS
2 -	1	QM2-3345-000		1	PAPER SUPPORT UNIT	FOR iX5000
		QM3-1597-000		1	PAPER SUPPORT UNIT	FOR iX4000
	2	QC1-9023-000		1	EMBLEM, PIXUS	FOR iX5000
		QC1-9024-000		1	EMBLEM, PIXMA	
	3	QM2-3342-000		1	ACCESS COVER UNIT	FOR iX5000
		QM3-1595-000		1	ACCESS COVER UNIT	FOR iX4000
	4	QM2-3341-000		1	MAIN CASE UNIT	FOR iX5000
		QM3-1594-000		1	MAIN CASE UNIT	FOR iX4000
	5	QM2-3344-000		1	PANEL COVER R UNIT	FOR iX5000
		QM3-1596-000		1	PANEL COVER R UNIT	FOR iX4000
	6	QC1-8860-000		1	COVER, I/F	FOR iX5000
		QC2-2951-000		1	COVER, I/F	FOR iX4000
	7	QM2-3347-000		1	FRONT DOOR UNIT	FOR iX5000
		QM3-1599-000		1	FRONT DOOR UNIT	FOR iX4000
	8	QC1-8875-000		1	COVER, BASE R	FOR iX5000
		QC2-2953-000		1	COVER, BASE R	FOR iX4000
	9	QC2-2481-000		1	COVER, AB SENSOR	
	10	QC1-8874-000		1	COVER, BASE L	FOR iX5000
		QC2-2952-000		1	COVER, BASE L	FOR iX4000
	11	QC1-8850-000		1	COVER, BASE	FOR iX5000
		QC2-2949-000		1	COVER, BASE	FOR iX4000

www.drukparts.pl

FIGURE 3 BOTTOM CASE UNIT & INK ABSORBER

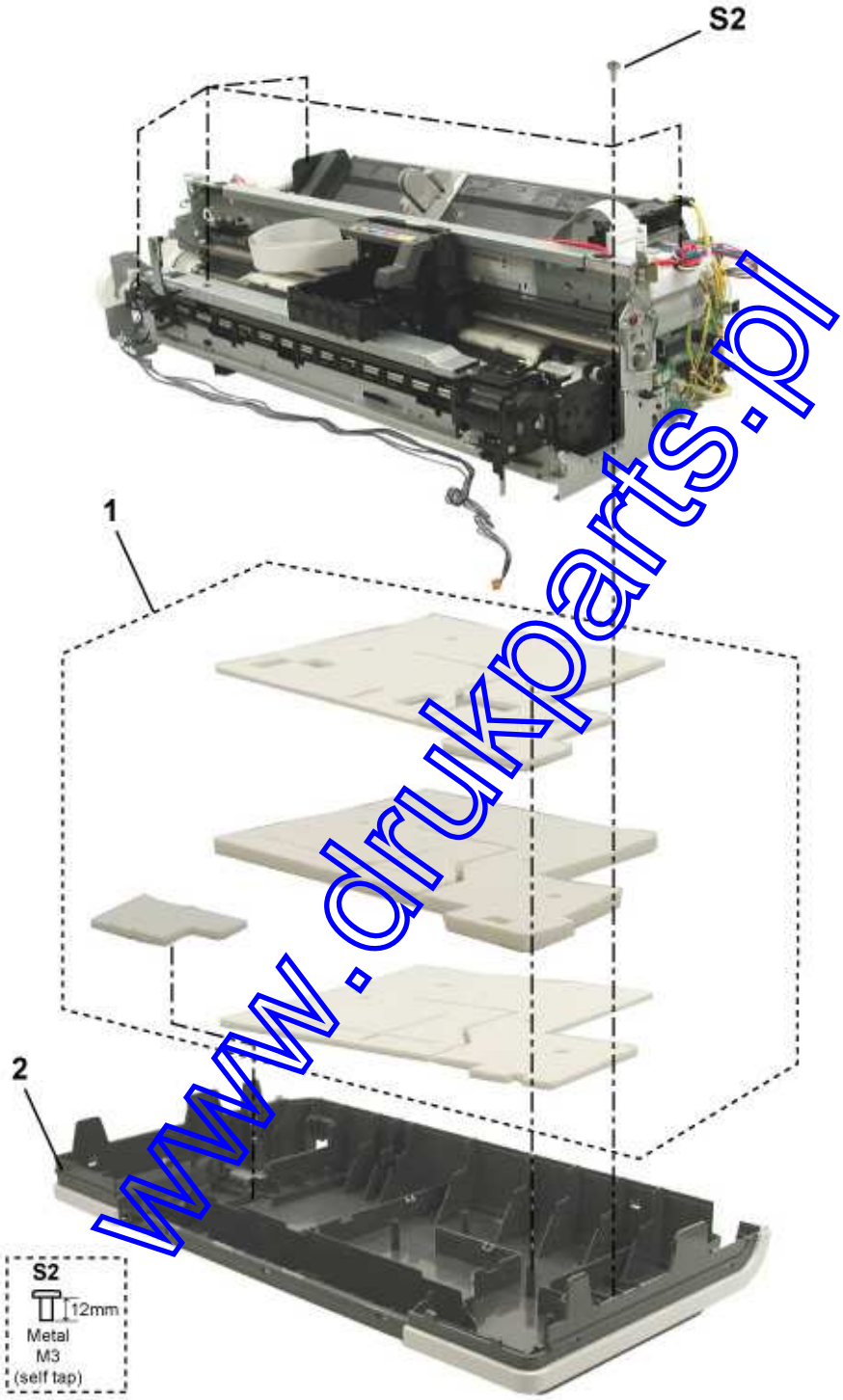

www.drukparts.pl

FIGURE & KEY No.		PART NUMBER	RANK	QTY	DESCRIPTION	REMARKS
3 -	1	QY5-0164-000		1	ABSORBER KIT	
	2	QM2-3373-000		1	BOTTOM CASE UNIT	FOR iX5000
		QM3-1600-000		1	BOTTOM CASE UNIT	FOR iX4000

www.drukparts.pl

FIGURE 4 LOGIC BOARD ASS'Y

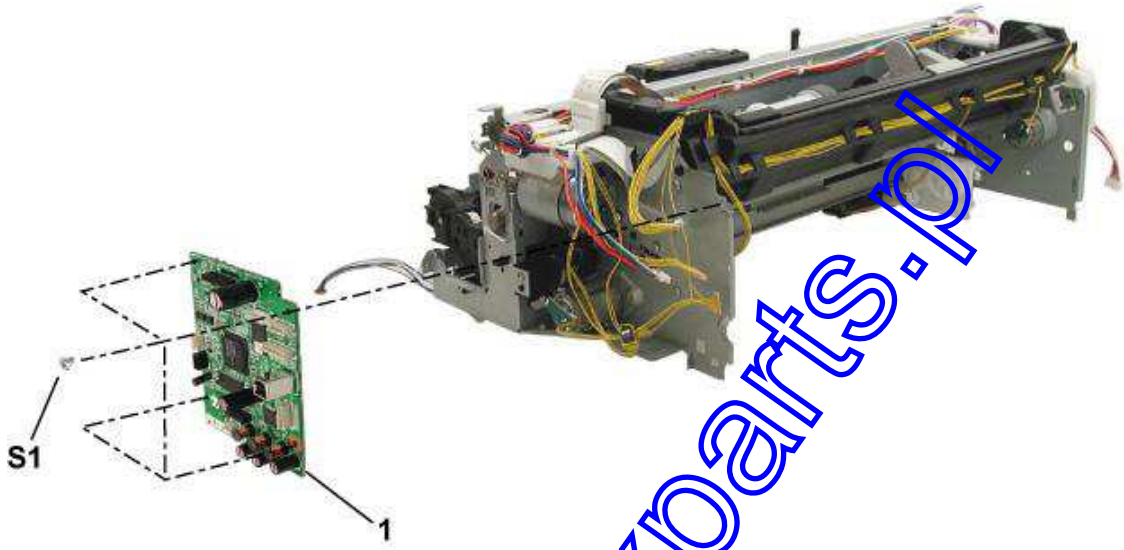

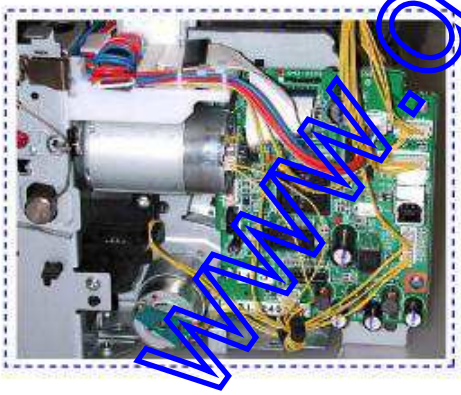

S1
4mm
Metal
M3

www.drukparts.pl

FIGURE & KEY No.		PART NUMBER	RANK	QTY	DESCRIPTION	REMARKS
4 -	1	QM2-3393-000		1	LOGIC BOARD ASS'Y	FOR iX5000
		QM3-1654-000		1	LOGIC BOARD ASS'Y	FOR iX4000

www.drukparts.pl

FIGURE 5 SHEET FEED UNIT

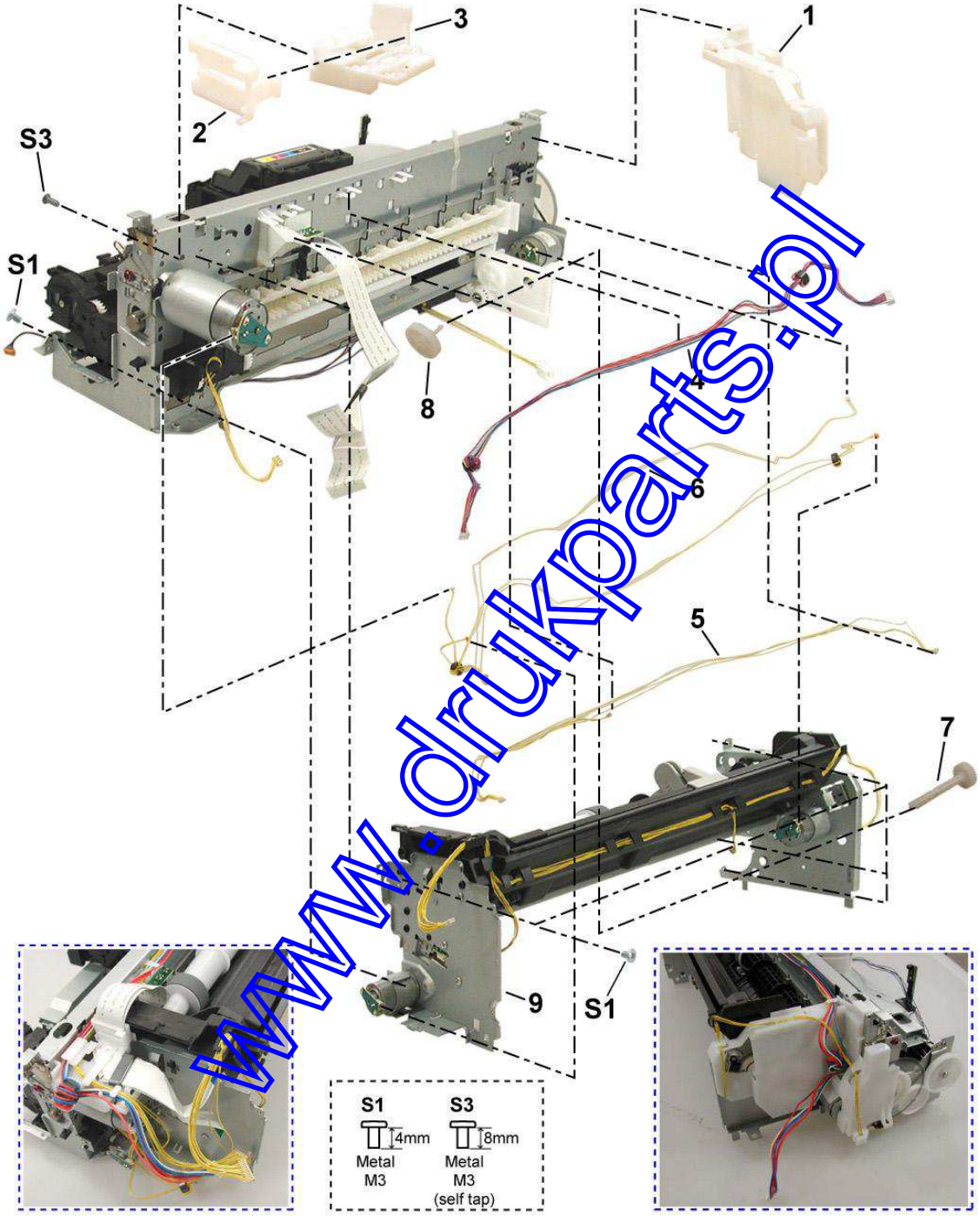

www.drukparts.pl

FIGURE & KEY No.		PART NUMBER	RANK	QTY	DESCRIPTION	REMARKS
5 -	1	QC1-8866-000		1	GUIDE, HARNESS L	
	2	QC1-8828-000		1	HOLDER, CARRIAGE CABLE	
	3	QC1-8816-000		1	GUIDE, HARNESS R	
	4	QM2-3406-000		1	DC CONNECTOR ASS'Y	
	5	QM2-3399-000		1	SENSOR MULTI HARNESS ASS'Y	
	6	QM2-3405-000		1	MOTOR MULTI HARNESS ASS'Y	
	7	QC1-8756-000		1	GEAR, PAPER SUPPORT	
	8	QC1-8757-000		1	GEAR, PAPER SUPPORT	
	9	QM2-3367-000		1	SHEET FEED UNIT	

www.drukparts.pl

FIGURE 6 PURGE UNIT

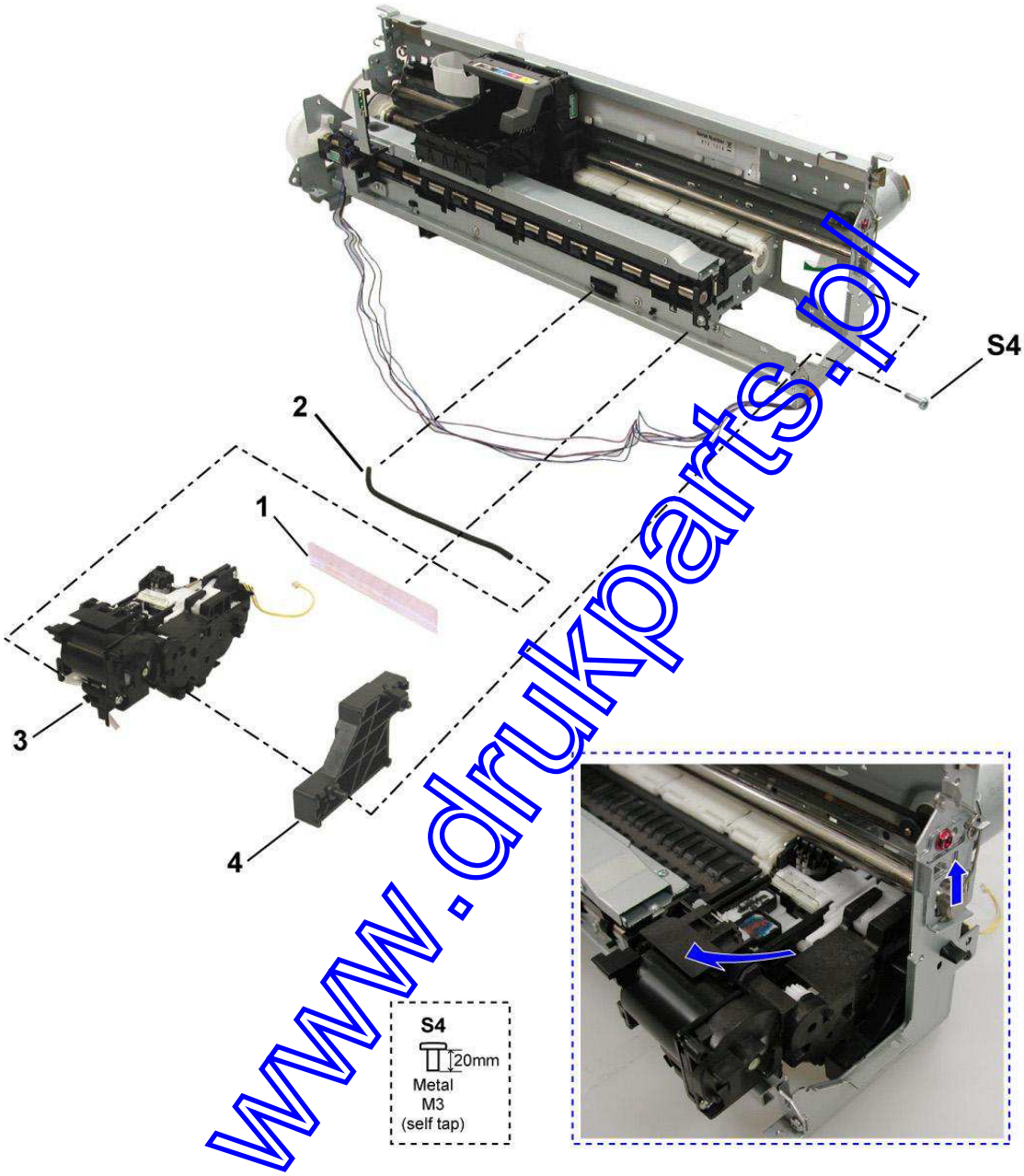

www.drukparts.pl

FIGURE & KEY No.		PART NUMBER	RANK	QTY	DESCRIPTION	REMARKS
6 -	1	QC2-2480-000		1	COVER, TUBE	
	2	QC1-6458-000		1	TUBE, WASTE INK	
	3	QM2-3370-000		1	PURGE UNIT	
	4	QC1-8755-000		1	SPACER, PURGE	

www.drukparts.pl

FIGURE 7 PLATEN UNIT

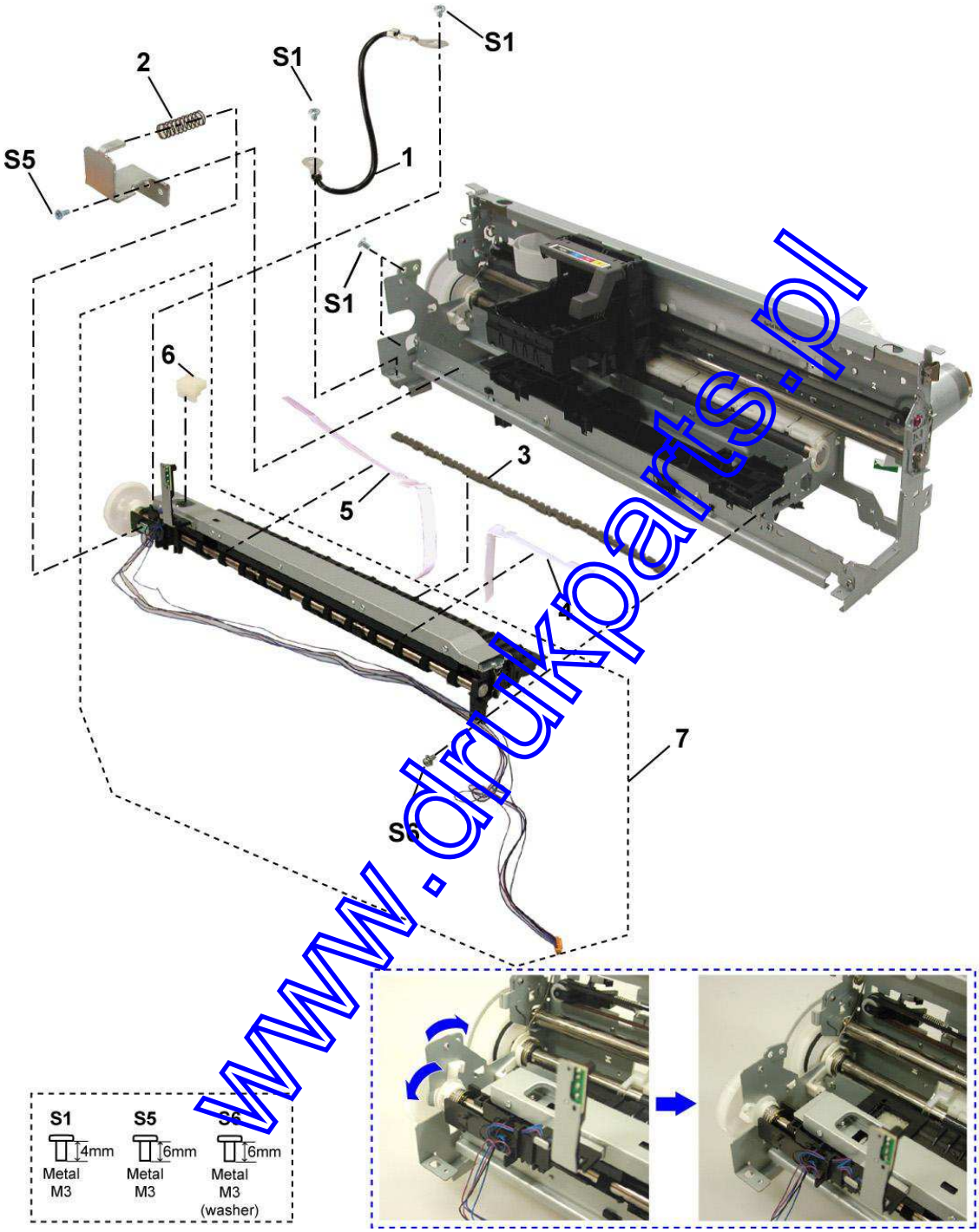

www.drukparts.pl

FIGURE & KEY No.		PART NUMBER	RANK	QTY	DESCRIPTION	REMARKS
7 -	1	QM2-3408-000		1	GROUND HARNESS	
	2	QC2-2476-000		1	SPRING, COMPRESSION	
	3	QC1-8773-000		1	ABSORBER, INK	
	4	QC1-8876-000		1	ABSORBER, INK	
	5	QC1-8877-000		1	ABSORBER, INK	
	6	QC1-6243-000		1	ABSORBER, INK	
	7	QM2-3353-000		1	PLATEN UNIT	

www.drukparts.pl

FIGURE 8 CARRIAGE UNIT

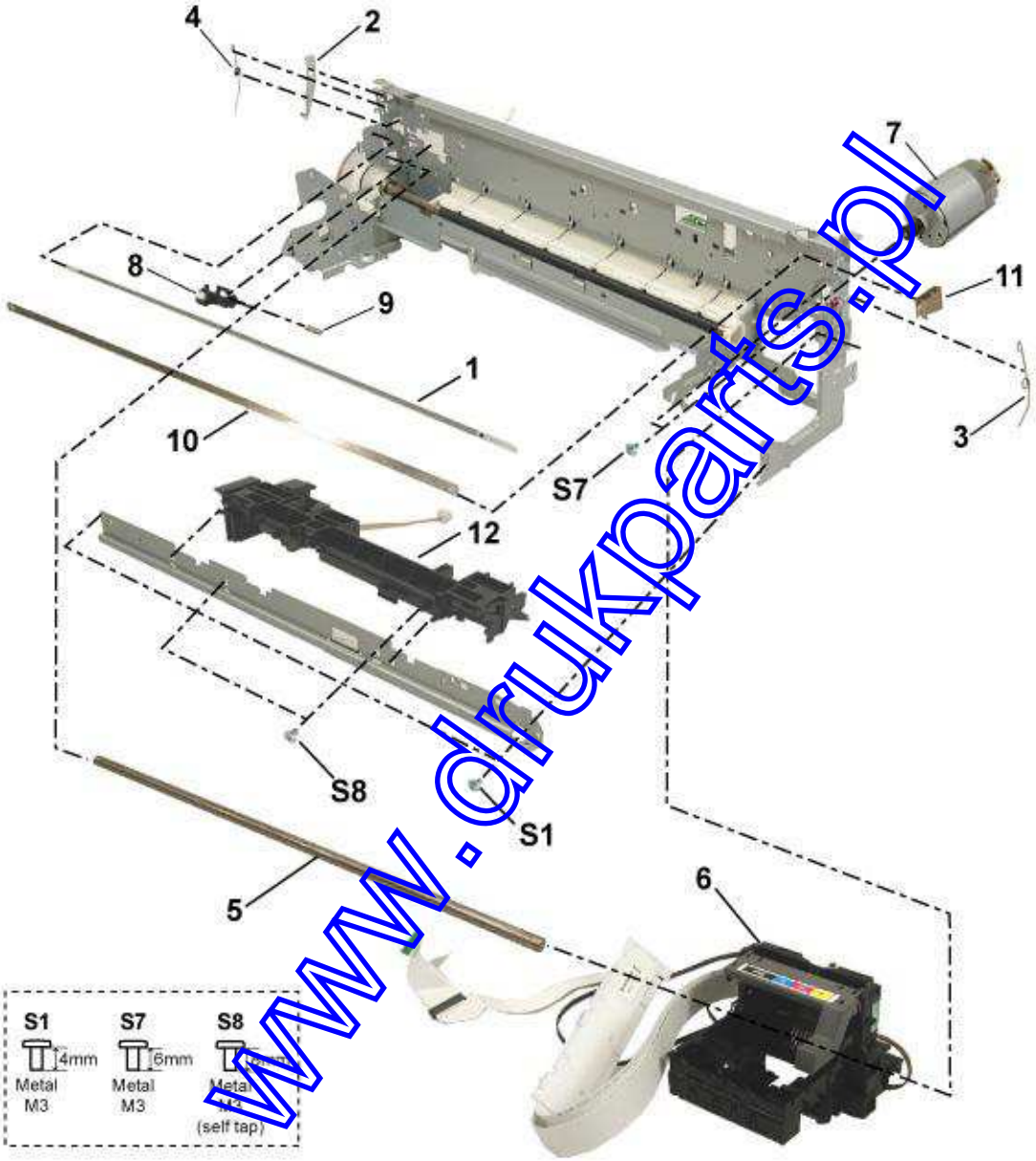

www.drukparts.pl

FIGURE & KEY No.		PART NUMBER	RANK	QTY	DESCRIPTION	REMARKS
8 -	1	QC1-8750-000		1	FILM, TIMING SLIT STRIP	
	2	QC1-6201-000		1	SPRING, LEAF	
	3	QC1-8751-000		1	CLIP, SHAFT R	
	4	QC1-6206-000		1	CLIP, SHAFT L	
	5	QC1-8749-000	N	1	SHAFT, CARRIAGE	
	6	QM2-3361-000		1	CARRIAGE UNIT	
	7	QK1-1500-000		1	MOTOR, CARRIAGE	
	8	QL2-1293-000		1	IDLER PULLEY ASS'Y	
	9	QC1-8748-000		1	SPRING, COIL	
	10	QC1-8869-000		1	PLATE, CARRIAGE SLIDE	
	11	QA4-0988-000		1	SPRING, LEAF	
	12	QM2-3358-000		1	OUTPUT SUPPORT UNIT	

www.drukparts.pl

FIGURE 9 PAPER FEED UNIT

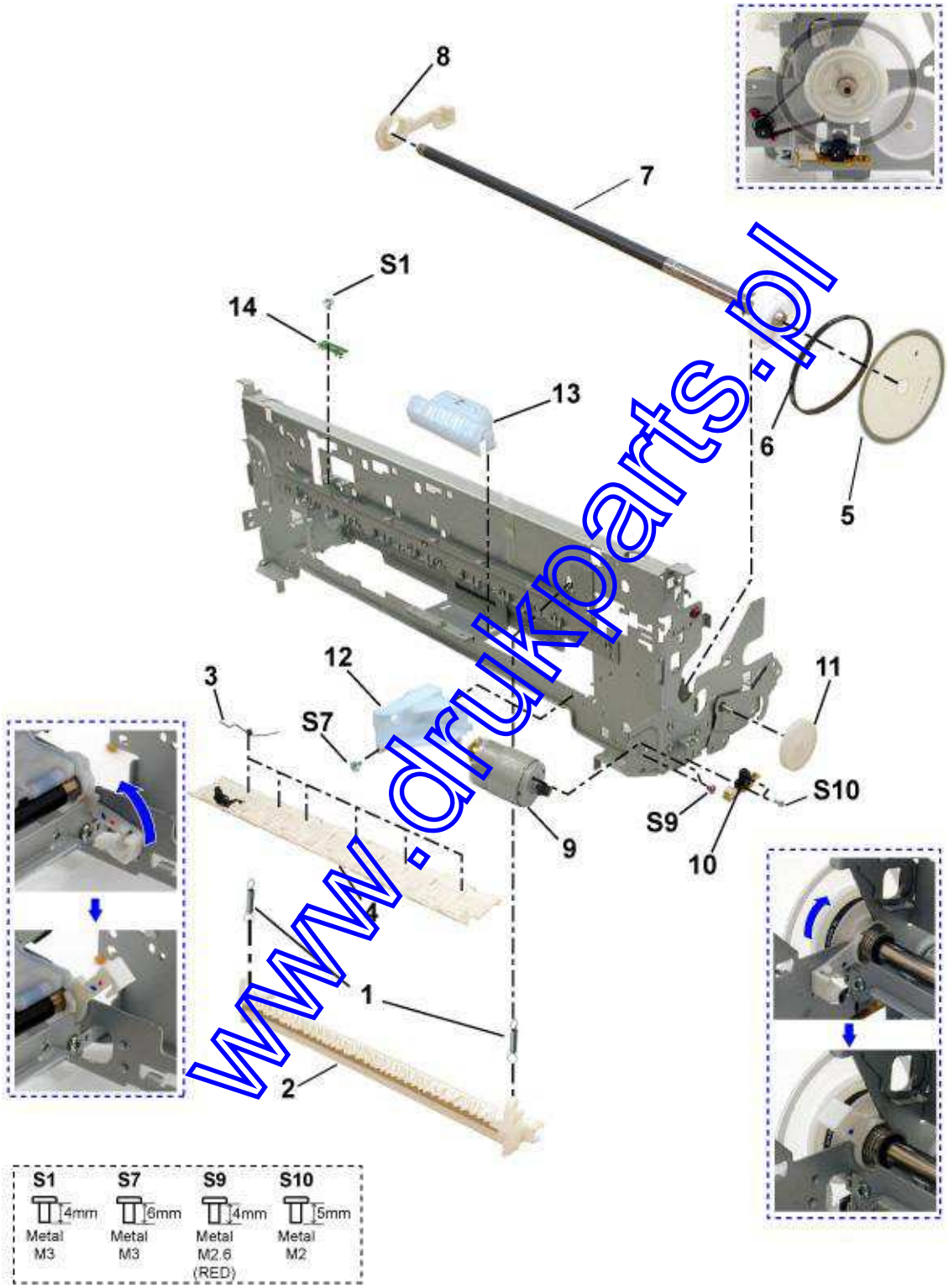

www.drukparts.pl

FIGURE & KEY No.		PART NUMBER	RANK	QTY	DESCRIPTION	REMARKS
9 -	1	QC1-8753-000		2	SPRING, HOOK END COIL	
	2	QM2-3360-000		1	PAPER GUIDE UNIT	
	3	QC1-8814-000		6	SPRING, TORSION	
	4	QM2-3352-000		1	PRESSURE ROLLER ASS'Y	
	5	QC1-4375-000		1	FILM, TIMING SLIT DISK	
	6	QC1-4836-000		1	BELT, PAPER FEED	
	7	QL2-1291-000		1	FEED ROLLER ASS'Y	
	8	QC1-8855-000		1	BUSHING, PAPER FEED ROLLER	
	9	QK1-1996-000		1	MOTOR, PAPER FEED	
	10	QM2-2683-000		1	TIMING SENSOR UNIT	
	11	QC1-6225-000		1	GEAR, EJECT	
	12	QM2-3359-000		1	OUTPUT SUPPORT GEAR UNIT	
	13	QM2-3369-000		1	PAPER FEED SUPPORT UNIT	
	14	QM2-2677-000		1	PE SENSOR UNIT	

www.drukparts.pl

FIGURE 10 OPTION & CONSUMABLES

1
(PIXUS iX5000)

2
(PIXMA iX4000/iX5000)

www.drukparts.pl

FIGURE & KEY No.		PART NUMBER	RANK	QTY	DESCRIPTION	REMARKS
10 -	1	NPN		1	BLACK INK TANK BCI-9BK	
		NPN		1	YELLOW INK TANK BCI7eY	
		NPN		1	MAGENTA INK TANK BCI-7eM	
		NPN		1	CYAN INK TANK BCI-7eC	
	2	NPN		1	BLACK INK TANK PGI-5BK	
		NPN		1	YELLOW INK TANK CLI-8Y	
		NPN		1	MAGENTA INK TANK CLI-8M	
		NPN		1	CYAN INK TANK CLI-8C	

www.drukparts.pl

D. SCREW & WASHER LIST

Contents NUMERICAL INDEX

FIGURE & KEY	No.	PART NUMBER	RANK	QTY	DESCRIPTION	REMARKS
S -	1	XB1-2300-405			SCREW, MACH.BH, M3X4	
	2	XA9-1258-000			SCREW, TAP, WASHER HEAD, M3X12	
	3	XB4-7300-805			SCREW, TP, BH3X8	
	4	XB4-7302-005			SCREW, TAPPING, TRUSS HEAD,M3X20	
	5	XB1-2300-605			SCREW, MACHINE, BINDING HEAD, M3x6	
	6	XB2-4300-605			SCREW, W/WASHER, M3X6	
	7	XB6-7300-605			SCREW, MACHINE, WASHER HEAD, M3x6	
	8	XA9-0476-000			SCREW, TP M3X8	
	9	XA9-1437-000			SCREW, BIND, M2.6X4(RED)	
	10	XB1-2200-505			SCREW, MACH, TRUSS HEAD, M2X5	

www.drukparts.pl

This page intentionally left blank

www.drukparts.pl

Contents ILLUSTRATION INDEX NUMERICAL INDEX

FIGURE 11 TOOL

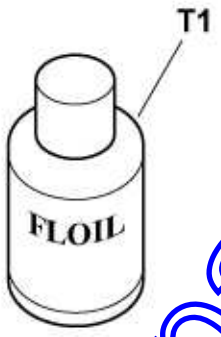

www.drukparts.pl

FIGURE & KEY No.		PART NUMBER	RANK	QTY	DESCRIPTION	REMARKS
T -	1	QY9-0057-000		1	LUBE, FLOIL KG107A, OIL	

www.drukparts.pl

F. NUMERICAL INDEX

Contents ILLUSTRATION INDEX

PART NUMBER	FIGURE & KEY No.		DESCRIPTION
QA4-0988-000	8 -	11	SPRING, LEAF
QC1-4375-000	9 -	5	FILM, TIMING SLIT DISK
QC1-4836-000	9 -	6	BELT, PAPER FEED
QC1-6201-000	8 -	2	SPRING, LEAF
QC1-6206-000	8 -	4	CLIP, SHAFT L
QC1-6225-000	9 -	11	GEAR, EJECT
QC1-6243-000	7 -	6	ABSORBER, INK
QC1-6458-000	6 -	2	TUBE, WASTE INK
QC1-8748-000	8 -	9	SPRING, COIL
QC1-8749-000	8 -	5	SHAFT, CARRIAGE
QC1-8750-000	8 -	1	FILM, TIMING SLIT STRIP
QC1-8751-000	8 -	3	CLIP, SHAFT R
QC1-8753-000	9 -	1	SPRING, HOOK END COIL
QC1-8755-000	6 -	4	SPACER, PURGE
QC1-8756-000	5 -	7	GEAR, PAPER SUPPORT
QC1-8757-000	5 -	8	GEAR, PAPER SUPPORT
QC1-8773-000	7 -	3	ABSORBER, INK
QC1-8814-000	9 -	3	SPRING, TORSION
QC1-8816-000	5 -	3	GUIDE, HARNESS R
QC1-8828-000	5 -	2	HOLDER, CARRIAGE CABLE
QC1-8850-000	2 -	11	COVER, BASE
QC1-8855-000	9 -	8	BUSHING, PAPER FEED ROLLER
QC1-8860-000	2 -	6	COVER, I/F
QC1-8866-000	5 -	1	GUIDE, HARNESS L
QC1-8869-000	8 -	10	PLATE, CARRIAGE SLIDE
QC1-8874-000	2 -	10	COVER, BASE L
QC1-8875-000	2 -	8	COVER, BASE R
QC1-8876-000	7 -	4	ABSORBER, INK
QC1-8877-000	7 -	5	ABSORBER, INK
QC1-9023-000	2 -	2	EMBLEM, PIXUS
QC1-9024-000	2 -	2	EMBLEM, PIXMA
QC2-2476-000	7 -	2	SPRING, COMPRESSION
QC2-2480-000	6 -	1	COVER, TUBE
QC2-2481-000	2 -	9	COVER, AB SENSOR
QC2-2949-000	2 -	11	COVER, BASE
QC2-2951-000	2 -	6	COVER, I/F
QC2-2952-000	2 -	10	COVER, BASE L
QC2-2953-000	2 -	8	COVER, BASE R
QK1-0279-000	1 -	2	CORD, POWER
QK1-0286-000	1 -	2	CORD, POWER
QK1-1061-000	1 -	2	CORD, POWER
QK1-1500-000	8 -	7	MOTOR, CARRIAGE
QK1-1996-000	9 -	9	MOTOR, PAPER FEED
QK1-2017-000	1 -	2	CORD, POWER
QK1-2048-000	1 -	3	AC ADAPTER: 100V-240V 50/60HZ
QL2-1291-000	9 -	7	FEED ROLLER ASS'Y
QL2-1293-000	8 -	8	IDLER PULLEY ASS'Y
QM2-2677-000	9 -	14	PE SENSOR UNIT
QM2-2683-000	9 -	10	TIMING SENSOR UNIT
QM2-3341-000	2 -	4	MAIN CASE UNIT
QM2-3342-000	2 -	3	ACCESS COVER UNIT
QM2-3344-000	2 -	5	PANEL COVER R UNIT
QM2-3345-000	2 -	1	PAPER SUPPORT UNIT
QM2-3347-000	2 -	7	FRONT DOOR UNIT
QM2-3352-000	9 -	4	PRESSURE ROLLER ASS'Y
QM2-3353-000	7 -	7	PLATEN UNIT
QM2-3358-000	8 -	12	OUTPUT SUPPORT UNIT
QM2-3359-000	9 -	12	OUTPUT SUPPORT GEAR UNIT
QM2-3360-000	9 -	2	PAPER GUIDE UNIT
QM2-3361-000	8 -	6	CARRIAGE UNIT

PART NUMBER	FIGURE & KEY No.		DESCRIPTION
QM2-3367-000	5 -	9	SHEET FEED UNIT
QM2-3369-000	9 -	13	PAPER FEED SUPPORT UNIT
QM2-3370-000	6 -	3	PURGE UNIT
QM2-3373-000	3 -	2	BOTTOM CASE UNIT
QM2-3393-000	4 -	1	LOGIC BOARD ASS'Y
QM2-3399-000	5 -	5	SENSOR MULTI HARNESS ASS'Y
QM2-3405-000	5 -	6	MOTOR MULTI HARNESS ASS'Y
QM2-3406-000	5 -	4	DC CONNECTOR ASS'Y
QM2-3408-000	7 -	1	GROUND HARNESS
QM3-1594-000	2 -	4	MAIN CASE UNIT
QM3-1595-000	2 -	3	ACCESS COVER UNIT
QM3-1596-000	2 -	5	PANEL COVER R UNIT
QM3-1597-000	2 -	1	PAPER SUPPORT UNIT
QM3-1599-000	2 -	7	FRONT DOOR UNIT
QM3-1600-000	3 -	2	BOTTOM CASE UNIT
QM3-1654-000	4 -	1	LOGIC BOARD ASS'Y
QY5-0164-000	3 -	1	ABSORBER KIT
QY6-0064-000	1 -	1	PRINT HEAD
QY9-0057-000	1 -	1	LUBE, FLOIL KG107A, OIL
WT3-5156-000	1 -	2	CORD, POWER
WT3-5160-000	1 -	2	CORD, POWER
WT3-5182-000	1 -	2	CORD, POWER
XA9-0476-000	S -	8	SCREW, TP M3X8
XA9-1258-000	S -	2	SCREW, TAP, WASHER HEAD, M3X12
XA9-1457-000	S -	9	SCREW, BIND, M2.6X4(RED)
XB1-5200-505	S -	10	SCREW, MACH, TRUSS HEAD, M2X5
XB1-2300-405	S -	1	SCREW, MACH.BH, M3X4
XB1-2300-605	S -	5	SCREW, MACHINE, BINDING HEAD, M3x6
XB2-4300-605	S -	6	SCREW, W/WASHER, M3X6
XB4-7300-805	S -	3	SCREW, TP, BH3X8
XB4-7302-005	S -	4	SCREW, TAPPING, TRUSS HEAD,M3X20
XB6-7300-605	S -	7	SCREW, MACHINE, WASHER HEAD, M3x6

www.drukparts.sn