brother®

FACSIMILE EQUIPMENT

PARTS REFERENCE LIST

MODEL: MFC820CW / MFC640CW
DCP340CW

(For Germany / United Kingdom / France / Belgium / Netherlands / Switzerland / Spain / Italy / Asia / China / Oceania / Pan-Nordic / Iberia / Portugal)

www.drukparts.pl

www.drukparts.pl

© Copyright Brother 2005
All rights reserved.
No part of this publication may be reproduced in any form or by any means without permission in writing from the publisher.
Specifications are subject to change without prior notice.

NOTES FOR USING THIS PARTS REFERENCE LIST

1. In the case of ordering parts, it needs mentioning the following items:
   (1) Code
   (2) Q' ty
   (3) Description
   (4) Recommend (The √ mark is attached to recommend parts at this column.)
   (5) Symbol (PCB No., Revision, and Parts location mounted on the PCB.)

   Note: Orders without Parts Code or Tool No. cannot be accepted.

[Example]

	(1)	(2)	(3)	(4)	(5)	
REF.NO.	CODE	Q' TY	DESCRIPTION	RECOMMEND	SYMBOL	REMARKS

2. Design-changed parts:
   When the parts are changed, any one of the following symbols is mentioned in the REMARKS column.
   CHG (chg): The part is changed to a new part.
   ADD (add): The part is newly added.
   DEL (del): The part is deleted.
   Symbol in capital letters indicates that the change is the latest one in the page.

3. Parts change will be informed by the technical information.

www.drukparts.pl

COUNTRIES

GERMANY ----- GER
UNITED KINGDOM ----- UK
FRANCE ---- FRA
BELGIUM ---- BEL
NETHERLANDS ---- NLD
SWITZERLAND ---- CHE
DENMARK ---- DEN
FINLAND ---- FIN
SWEDEN ---- SWE
AUSTRIA ---- AUS
SPAIN ---- SPA
ITALY ---- ITA
CHINA ---- CHN
OCEANIA (AUSTRALIA & NEW ZEALAND) ---- OCE
PAN NORDIC (NORWAY / FINLAND / DENMARK / SWEDEN) ---- PND
IBERIA (SPAIN & PORTUGAL) ---- IBR
SINGAPORE ---- ASA
PORTUGAL ---- POR

1 ADF

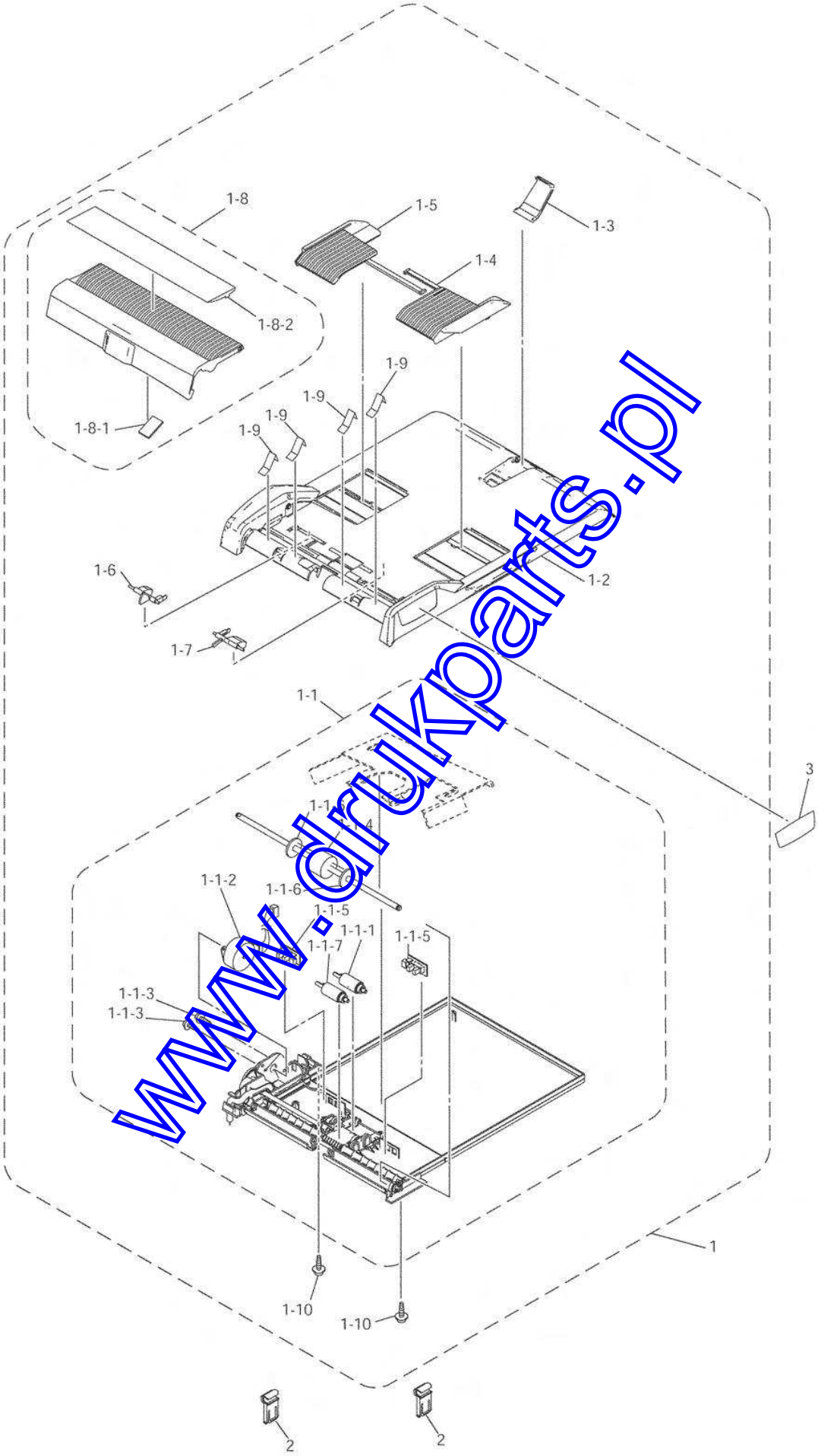

www.drukparts.pl

REF No.	CODE	Q'TY	DESCRIPTION	RECOMMEND	REMARKS
1	LP5762006	1	ADF UNIT ASSY (SP)	√	CHG
1-1	LP0585001	1	DOCUMENT SUPPORT ASSY		CHG
1-1-1	LF7006001	1	DOCUMENT PULL-IN ROLLER		
1-1-2	LF4953001	1	ADF MOTOR		
1-1-3	0A5300605	2	SCREW, PAN (S/P WASHER) M3X6		
1-1-4	LF4955001	1	DOCUMENT FEED ROLLER		
1-1-5	LG2239001	2	DOCUMENT SENSOR		
1-1-6	LF7681001	2	ROLLER SUPPORT		
1-1-7	LF4944001	1	DOCUMENT SEPARATION ROLLER		
1-2	LP0139006	1	DOCUMENT COVER		
1-3	LF4964006	1	DOCUMENT STOPPER		
1-4	LF4965006	1	OUTPUT DOCUMENT SUPPORT, F		
1-5	LF4966006	1	OUTPUT DOCUMENT SUPPORT, R		
1-6	LF4967001	1	DOCUMENT FRONT SENSOR ACTUATOR		
1-7	LF4968001	1	DOCUMENT REAR SENSOR ACTUATOR		
1-8	LF4969006	1	ADF COVER ASSY		
1-8-1	LF4975001	1	SEPARATION PAD		
1-8-2	LF5356005	1	EXIT COVER		
1-9	LF5144001	4	EXIT FILM		
1-10	085411216	2	TAPTITE BIND B M4X12		
2	LF4976006	2	HINGE		
3	LP0188004	1	EMBLEM BROTHER EXCEPT FOR CHN		
3	LF5024002	1	EMBLEM, MFC640CW FOR CHN		add

www.drukparts.pl

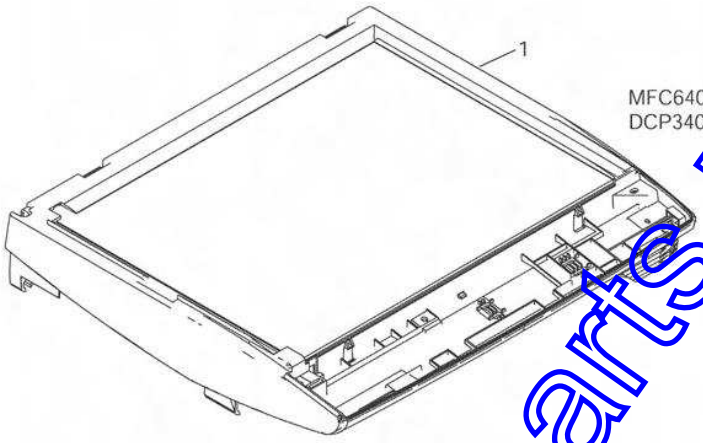

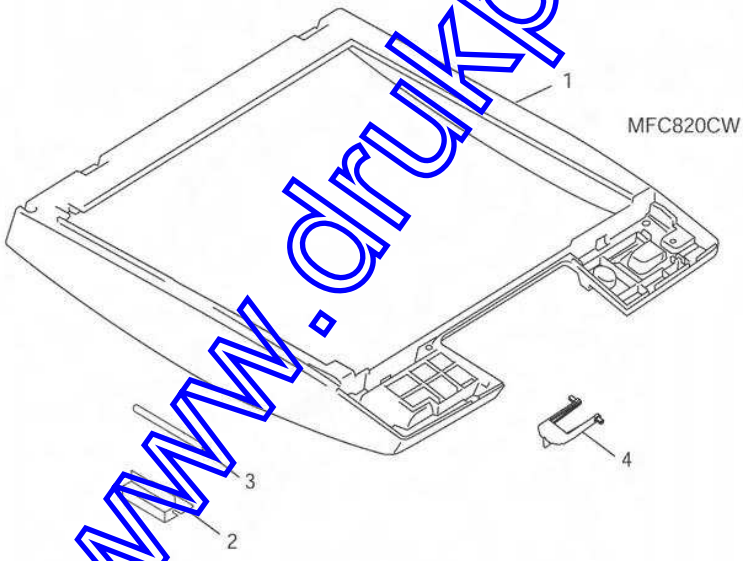

www.drukparts.pl

List2(SCANNER)

REF No.	CODE	Q'TY	DESCRIPTION	RECOMMEND	REMARKS
1	LP5639006	1	SCANNER UNIT, GRAY(1791), DCP340CW/MFC640CW	√	CHG
1	LP5640006	1	SCANNER UNIT, GRAY(1791), MFC820CW	√	CHG
2	LP0994001	1	HARNESS SUPPORT FILM		chg
3	LF7087001	1	HARNESS SPACER		
4	LP0505001	1	ACTUATOR ARM, MFC820CW		

www.drukparts.pl

3 ENGINE

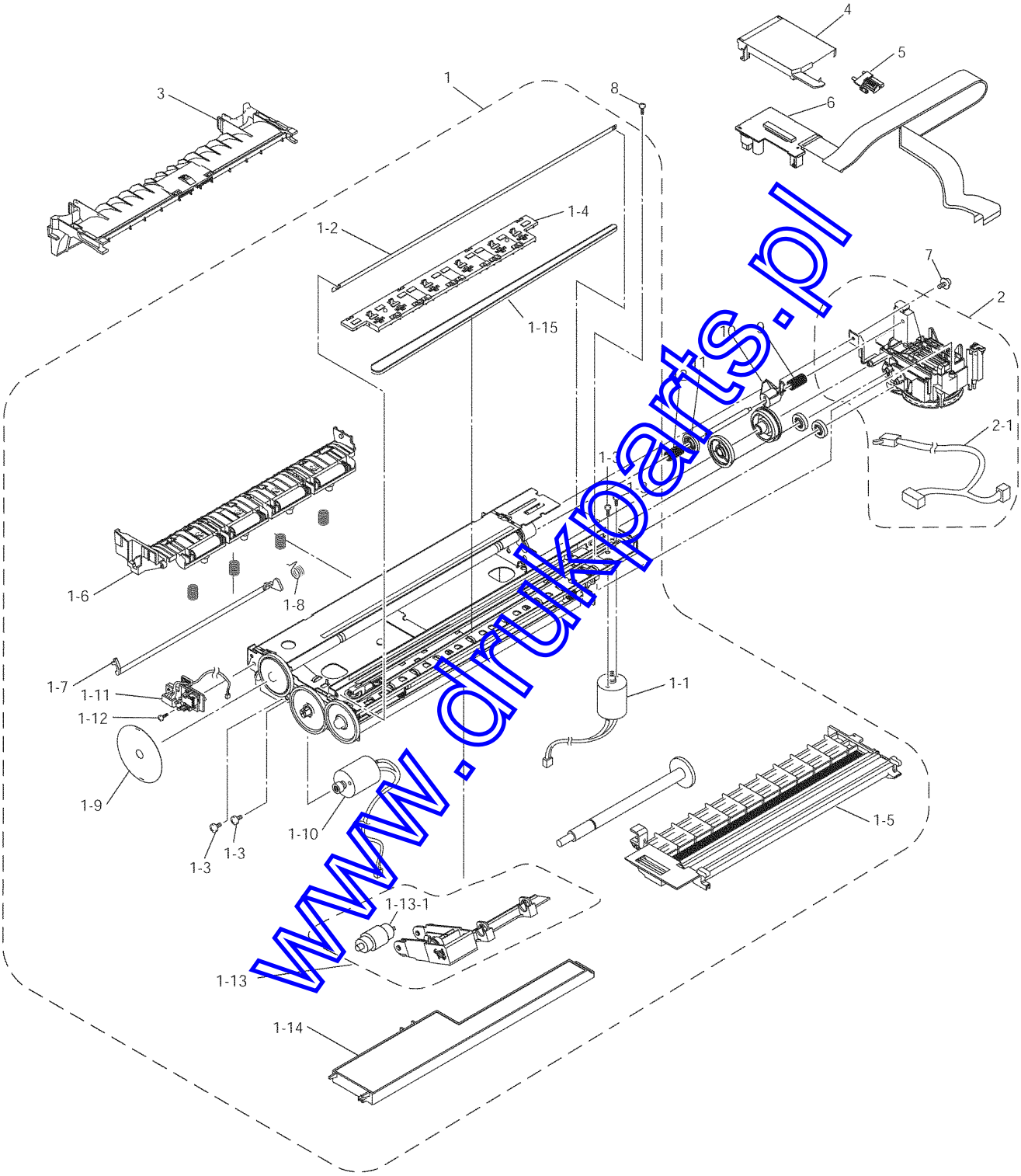

www.drukparts.pl

REF No.	CODE	Q'TY	DESCRIPTION	RECOMMEND	REMARKS
1	LF7963001	1	ENGINE UNIT SUPPLY ASSY		
1-1	LF4764001	1	CARRIAGE MOTOR		
1-2	LF4769001	1	CR ENCODER STRIP		
1-3	000300305	4	SCREW, BIND M3X3		
1-4	LP0555001	1	STAR WHEEL HOLDER ASSY A		
1-5	LF7525001	1	PLATEN		
1-6	LP0021001	1	PAPER PRESSURE HOLDER		
1-7	LF4789001	1	REGISTRATION SENSOR ACTUATOR		
1-8	LF4790001	1	SENSOR ACTUATOR SPRING		
1-9	LF4800001	1	PF ENCODER DISK		
1-10	LP0060001	1	PAPER FEED MOTOR		
1-11	LF4809001	1	PF SENSOR PCB		
1-12	087320616	1	TAPTITE, CUP S M3X6		
1-13	LF4812001	1	PAPER PULL-IN HOLDER		
1-13-1	LF4815001	1	AUTO SHEET FEEDER ROLLER ASSY		add
1-14	LF4818001	1	FLUSHING CASE		
1-15	LF4768001	1	TIMING BELT		ADD
2	LF7036001	1	MAINTENANCE UNIT		
2-1	LG5780001	1	INK CARTRIDGE/PURGE HP SWITCH HARNESS		
3	LF4806001	1	JAM CLEAR COVER		
4	LF7953001	1	HEAD COVER ASSY		
5	LP0057001	1	FFC SUPPORT		
6	LF7954001	1	CARRIAGE PCB SUPPLY ASSY		
7	087320616	1	TAPTITE, CUP S M3X6		
8	087310815	1	TAPTITE, CUP B M3X8		
9	LF4760001	1	PURGE LEVER SPRING (LONGER)		
10	LF4759001	1	PURGE LEVER		
11	LF4762001	1	CLUTCH GEAR		
12	LF4763001	1	CLUTCH GEAR SPRING (SHORTER)		

www.drukparts.pl

4 CARTRIDGE CASE

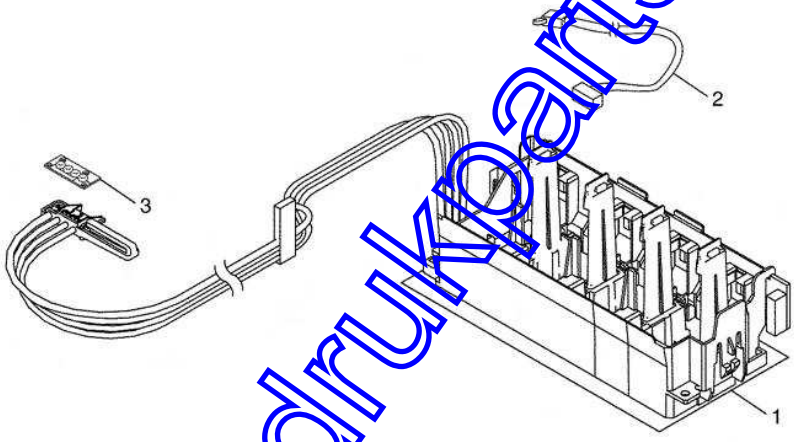

www.drukparts.pl

List4(CARTRIDGE CASE)

REF No.	CODE	Q'TY	DESCRIPTION	RECOMMEND	REMARKS
1	LP0472001	1	INK REFILL SUPPLY ASSY EXCEPT FOR CHN	√	
1	LP0472003	1	INK REFILL SUPPLY ASSY FOR CHN		
2	----		NOT USED		
3	LF7590001	1	HEAD JOINT RUBBER SUPPLY ASSY		

www.drukparts.pl

5 HEAD

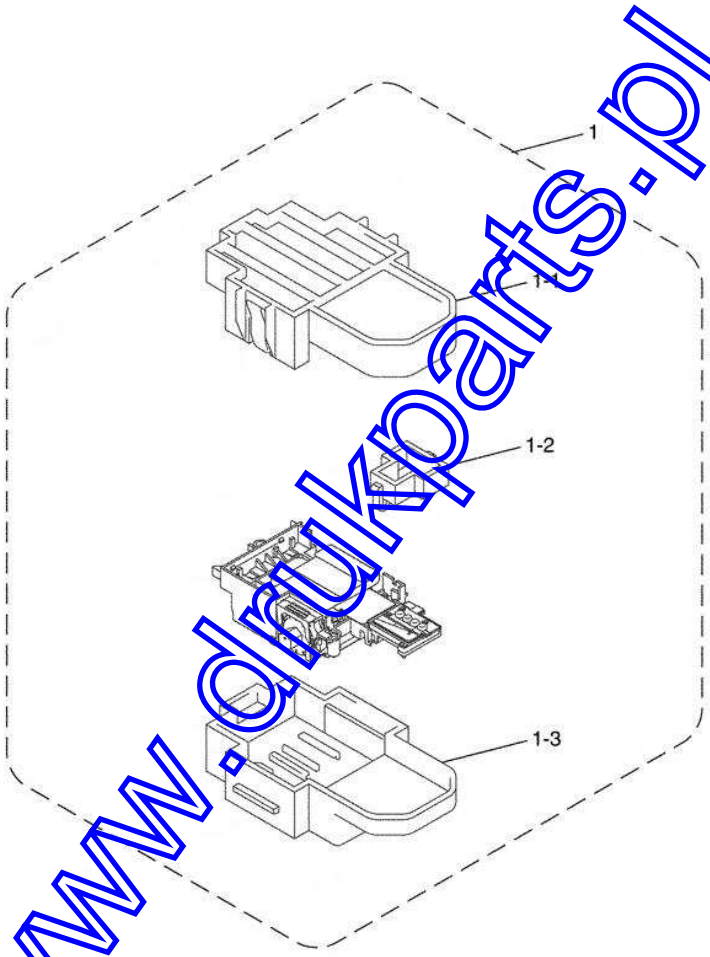

www.drukparts.pl

List5(HEAD)

REF No.	CODE	Q'TY	DESCRIPTION	RECOMMEND	REMARKS
1	LK1866001	1	HEAD/CARRIAGE UNIT SUPPLY ASSY (without CARRIAGE PCB ASSY) (*)		
1-1	LK1579001	1	HEAD CASING UPPER		
1-2	LK1581001	1	AIR BUFFER CAP		
1-3	LK1580001	1	HEAD CASING LOWER		

*: Please see List 3, 6; CARRIAGE PCB SUPPLY ASSY

www.drukparts.pl

6 PAPER TRAY

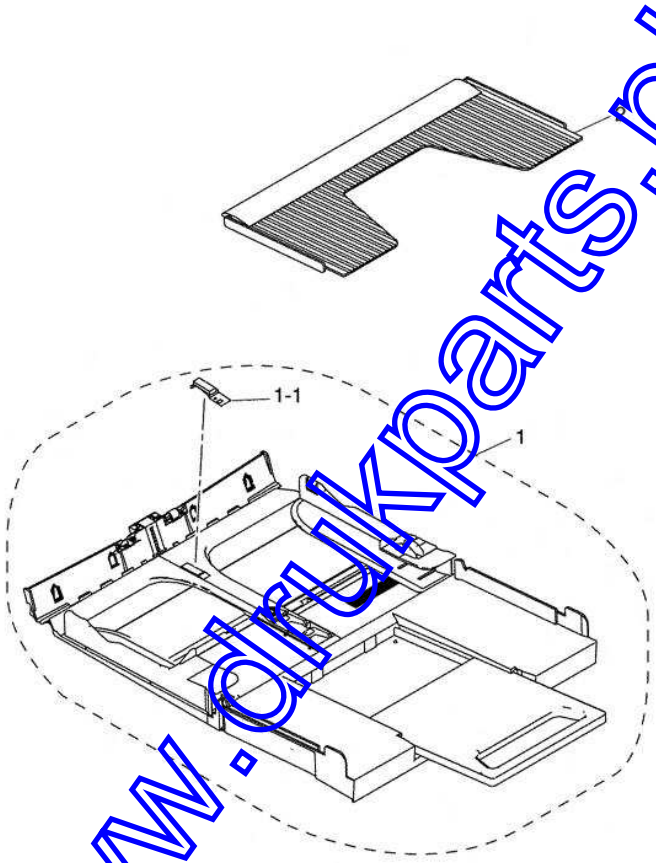

www.drukparts.pl

List6(PAPER TRAY)

REF No.	CODE	Q'TY	DESCRIPTION	RECOMMEND	REMARKS
1	LF4855001	1	PAPER TRAY ASSY	√	
1-1	LP0556001	1	BASE PAD ASSY		
2	LF5063001	1	TRAY COVER		

www.drukparts.pl

7. COVER

MFC640CW /
DCP340CW

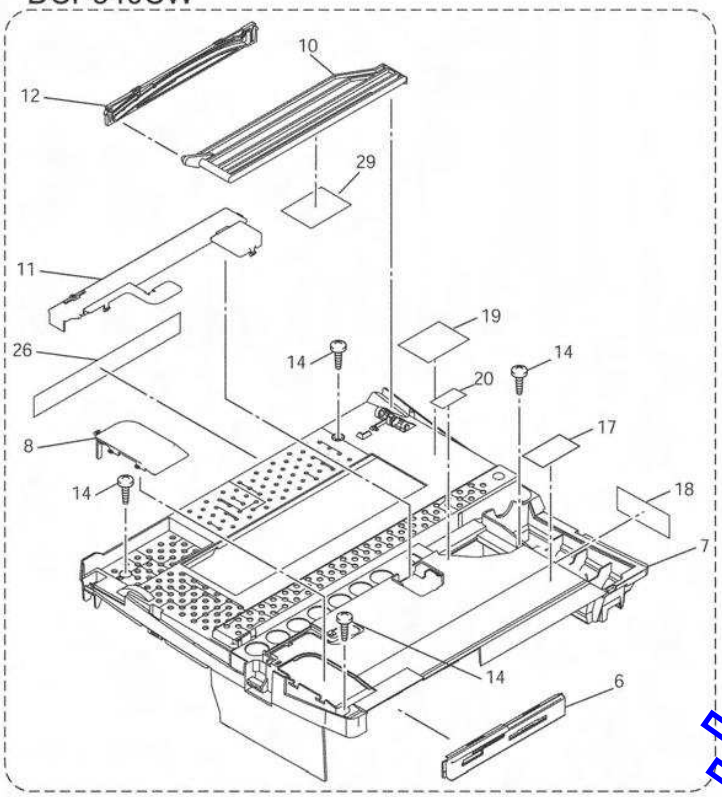

MFC820CW

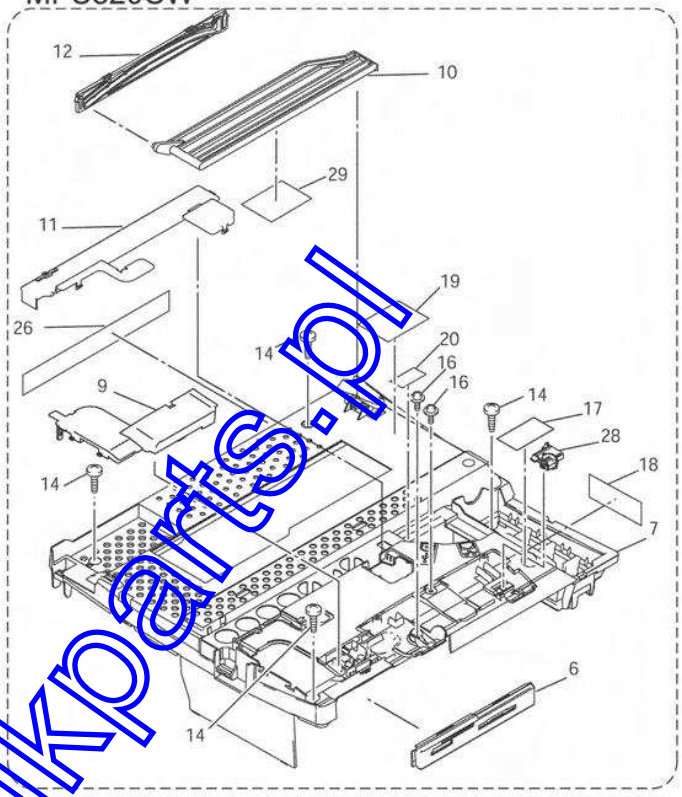

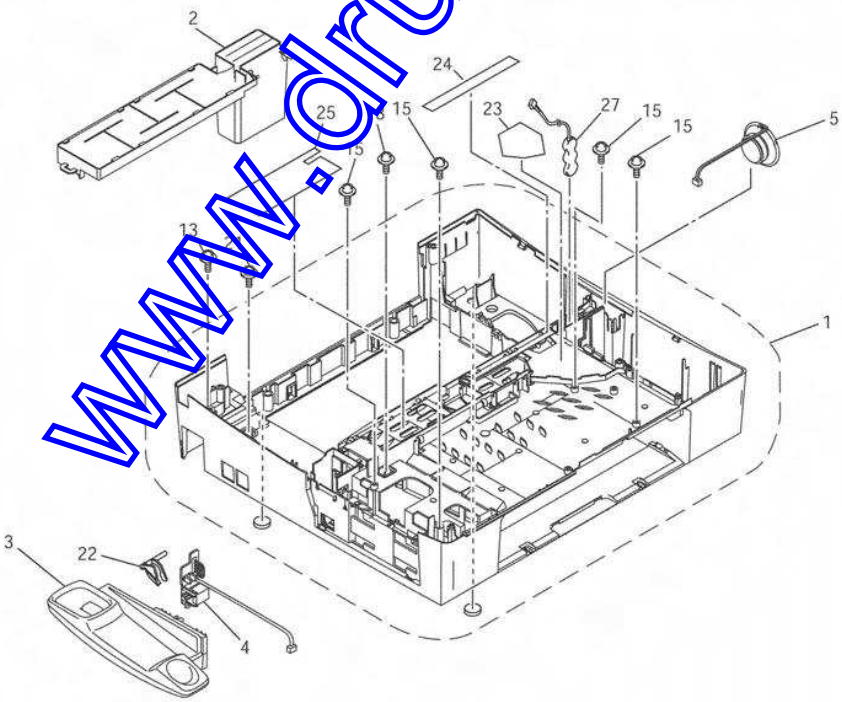

www.drukparts.pl

REF No.	CODE	Q'TY	DESCRIPTION	RECOMMEND	SYMBOL	REMARKS
1	LF4865001	1	LOWER COVER ASSY			
2	LF7443001	1	INK ABSORBER BOX ASSY	√		
3	LP3854001	1	HANDSET HOLDER ASSY, MFC640CW			chg
4	LG5474001	1	HOOK PCB ASSY, MFC640CW		B53K763	
5	LG6024001	1	SPEAKER UNIT, DCP340CW/MFC820CW			
5	LG5886001	1	SPEAKER UNIT, MFC640CW			
6	LP0924001	1	MEDIA MODULE COVER			
7	LF5127001	1	UPPER COVER, DCP340CW			
7	LF5341001	1	UPPER COVER, MFC640CW			
7	LP0499001	1	UPPER COVER, MFC820CW			
8	LF4879001	1	HARNESS COVER, DCP340CW/MFC640CW			
9	LP0502001	1	HARNESS COVER, MFC820CW			
10	LF4880001	1	SCANNER COVER STOPPER			
11	LF4987001	1	CIS FLAT CABLE COVER			
12	LP3588001	1	SCANNER COVER DAMPER			CHG
13	087320616	2	TAPTITE, CUP S M3X6			
14	085411216	4	TAPTITE, BIND B M4X12			
15	087310815	4	TAPTITE, CUP B M3X8			
16	087320616	2	TAPTITE, CUP S M3X6, MFC820CW			
~~17~~	~~LF5790001~~	~~1~~	~~INK REPLACE INSTRUCTION LABEL, DCP340CW/MFC640CW~~			del
17	LP0717001	1	INK REPLACE LABEL, DCP340CW/MFC640CW/MFC820CW			
18	LF5116001	1	CONSUMPTION LABEL FOR GER/UK/FRA/BEL/NLD/CHE/SPA/ITA/POR/PND			
18	LF7833001	1	CONSUMPTION LABEL FOR CHN			
18	LF5941001	1	CONSUMPTION LABEL ASA/OCE			
19	LF5789001	1	COVER OPEN/CLOSE LABEL			
20	LF5179001	1	USB STICKER EXCEPT FOR CHN			
20	LF5191001	1	USB STICKER FOR CHN			
21	0A5300805	1	SCREW, PAN (S/P WASHER) M3X8			
22	LF4993001	1	HOOK SWITCH ACTUATOR, MFC640CW			
23	LF7105001	1	USB/LAN CONNECTION LABEL			
24	LF7262001	1	FFC GUIDE FILM			
25	LF7445001	1	TUBE GUIDE FILM			
26	LP0582001	1	PAPER JAM INSTRUCTION LABEL/M2			
27	LG5500001	1	BATTERY 3/V80H, MFC640CW/MFC820CW			
28	LP0501001	1	PLASTIC HINGE, MFC820CW			
29	LP0825001	1	FB STOPPER DAMPING SHEET			add

www.drukparts.pl

8 PANEL

MFC640CW/DCP340CW

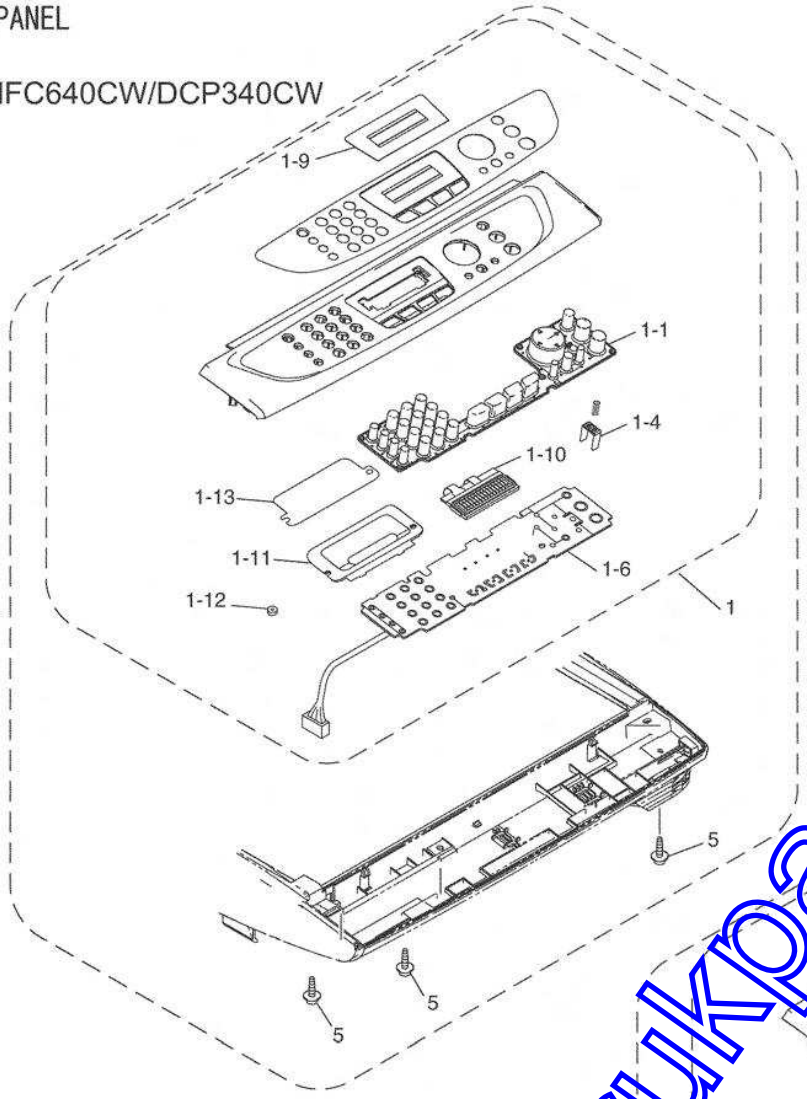

MFC820CW

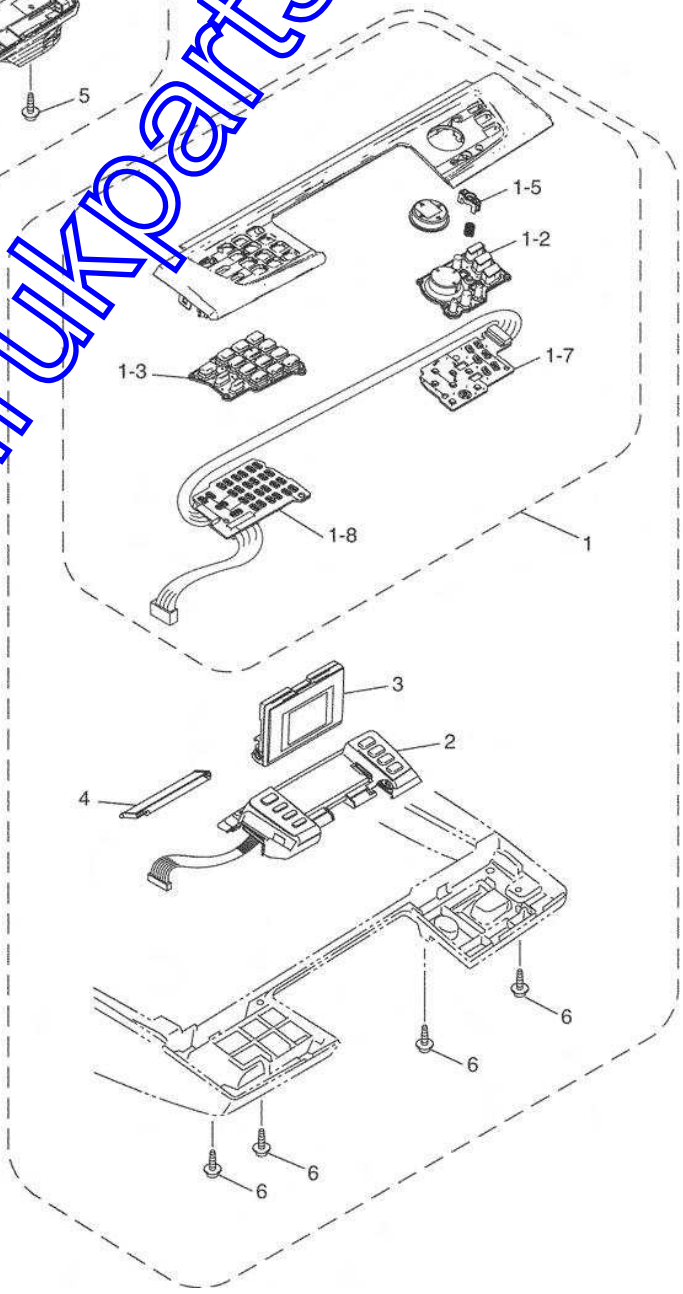

www.drukparts.pl

REF No.	CODE	Q'TY	DESCRIPTION	RECOMMEND	SYMBOL	REMARKS
1	LP0210001	1	CONTROL PANEL ASSY, DCP340CW	√		
1	LP0832001	1	CONTROL PANEL ASSY, MFC640CW FOR GER	√		
1	LP0887001	1	CONTROL PANEL ASSY, MFC820CW FOR GER	√		
1	LP0483001	1	CONTROL PANEL ASSY, MFC640CW FOR UK/BEL/CHE	√		
1	LP0516001	1	CONTROL PANEL ASSY, MFC820CW FOR UK/BEL/CHE	√		
1	LP0837001	1	CONTROL PANEL ASSY, MFC640CW FOR FRA	√		
1	LP0889001	1	CONTROL PANEL ASSY, MFC820CW FOR FRA	√		chg
1	LP0860001	1	CONTROL PANEL ASSY, MFC640CW FOR NLD	√		
1	LP0891001	1	CONTROL PANEL ASSY, MFC820CW FOR NLD	√		
1	LP0855001	1	CONTROL PANEL ASSY, MFC640CW FOR SPA	√		
1	LP0893001	1	CONTROL PANEL ASSY, MFC820CW FOR SPA	√		
1	LP0857001	1	CONTROL PANEL ASSY, MFC640CW FOR ITA	√		
1	LP0895001	1	CONTROL PANEL ASSY, MFC820CW FOR ITA	√		
1	LP0920001	1	CONTROL PANEL ASSY, MFC820CW FOR POR	√		
1	LP0852001	1	CONTROL PANEL ASSY, MFC640CW FOR CHN	√		
1	LP0879001	1	CONTROL PANEL ASSY, MFC640CW FOR ASA/OCE	√		
1	LP0870001	1	CONTROL PANEL ASSY, MFC640CW FOR PND	√		
1	LP0897001	1	CONTROL PANEL ASSY, MFC820CW FOR PND	√		
1-1	LF5133001	1	RUBBER KEYPAD, DCP340CW			
1-1	LF5111003	1	RUBBER KEYPAD, MFC640CW			
1-2	LP0476001	1	RUBBER KEYPAD R, MFC820CW			
1-3	LP0478001	1	RUBBER KEYPAD L, MFC820CW			
1-4	LF4890001	1	SCANNER OPEN SENSOR ACTUATOR, DCP340CW/MFC640CW			
1-5	LP0480001	1	SCANNER OPEN SENSOR ACTUATOR, MFC820CW			
1-6	LG6226072	1	CONTROL PANEL PCB ASSY, DCP340CW		B53K808	
1-6	LG5533051	1	CONTROL PANEL PCB ASSY, MFC640CW		B53K752	
1-7	LG6472001	1	CONTROL PANEL PCB ASSY R, MFC820CW		B53K829	
1-8	LG6473001	1	CONTROL PANEL PCB ASSY L, MFC820CW		B53K828	
1-9	LF5199002	1	LCD SHEET, DCP340CW			
1-9	LP0239001	1	LCD SHEET, MFC640CW FOR GER			
1-9	LP0240001	1	LCD SHEET, MFC640CW FOR UK/BEL/CHE/ASA/OCE/PND			
1-9	LP0241001	1	LCD SHEET, MFC640CW FOR FRA			
1-9	LP0244001	1	LCD SHEET, MFC640CW FOR NLD			
1-9	LP0243001	1	LCD SHEET, MFC640CW FOR SPA			
1-9	LP0242001	1	LCD SHEET, MFC640CW FOR ITA			
1-9	LP0873001	1	LCD SHEET, MFC640CW FOR CHN			
1-10	LG6132001	1	LCD, DCP340CW/MFC640CW			
1-11	LF5092001	1	LCD HOLDER, DCP340CW/MFC640CW			
1-12	UF6916001	1	MIC COVER, MFC640CW			
1-13	LF5093001	1	DIFFUSION FILM, DCP340CW/MFC640CW			
2	LP0888001	1	CENTER PANEL ASSY, MFC820CW FOR GER			
2	LP0518001	1	CENTER PANEL ASSY, MFC820CW FOR UK/BEL/CHE/PND			
2	LP0890001	1	CENTER PANEL ASSY, MFC820CW FOR FRA			
2	LP0892001	1	CENTER PANEL ASSY, MFC820CW FOR NLD			
2	LP0894001	1	CENTER PANEL ASSY, MFC820CW FOR SPA			
2	LP0896001	1	CENTER PANEL ASSY, MFC820CW FOR ITA			
2	LP0921001	1	CENTER PANEL ASSY, MFC820CW FOR POR			
3	LP0498001	1	CABLE PROTECT PLATE, MFC820CW			
4	LP0520001	1	LCD UNIT ASSY, MFC820CW			
5	087311216	3	TAPTITE, CUP B M3X12, DCP340CW/MFC640CW			
6	085311016	4	TAPTITE, BIND B M3X10, MFC820CW			CHG

www.oruk parts.pl

9 PCB

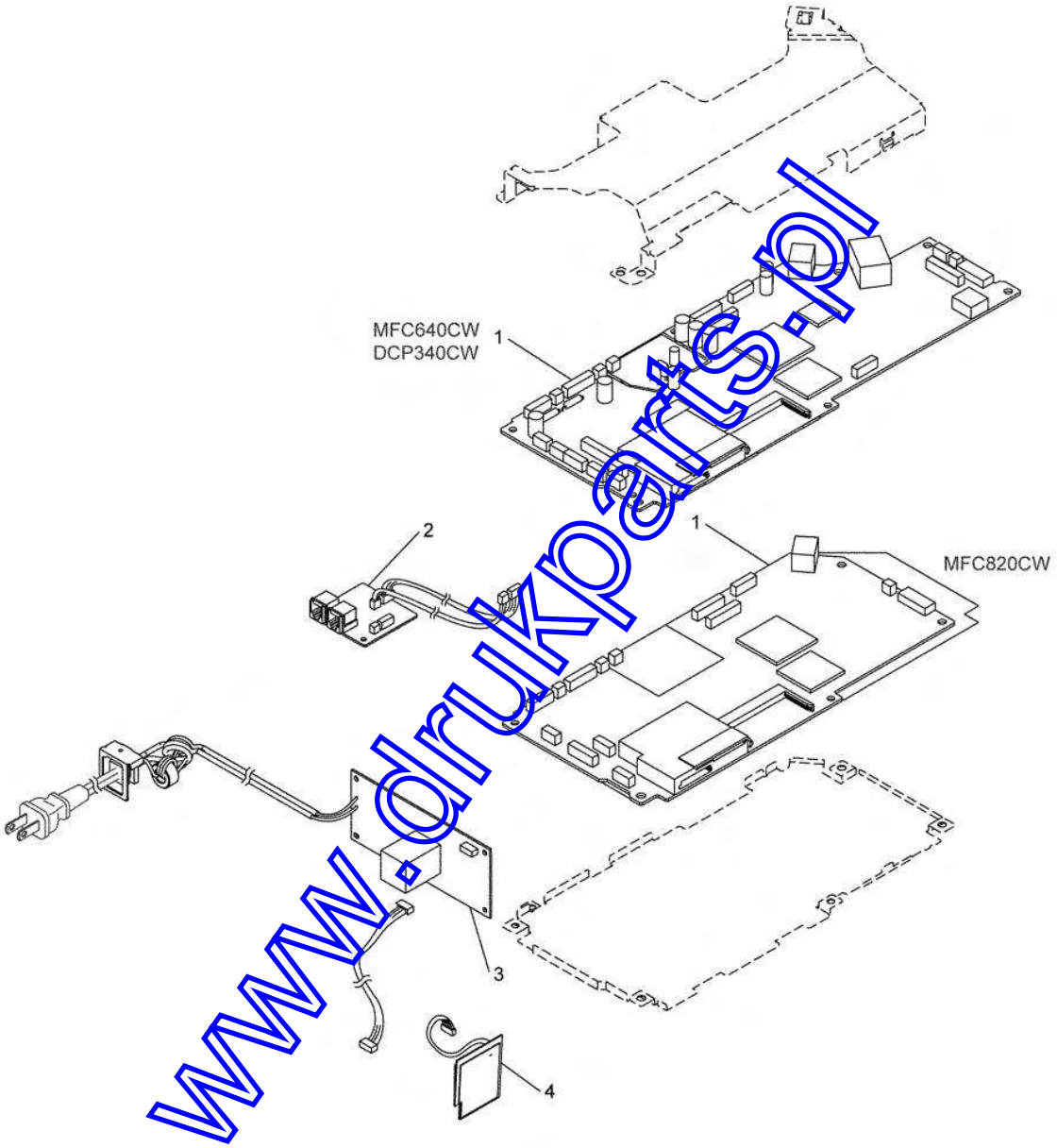

www.drukparts.pl

List9(PCB)

REF No.	CODE	Q'TY	DESCRIPTION	RECOMMEND	SYMBOL	REMARKS
1	LG6360061	1	MAIN PCB ASSY, DCP340CW	√	B53K819	
1	LG6356043	1	MAIN PCB ASSY, MFC640CW EXCEPT FOR CHN	√	B53K819	
1	LG6357053	1	MAIN PCB ASSY, MFC820CW	√	B53K819	
1	LG6356044	1	MAIN PCB ASSY, MFC640CW FOR CHN	√	B53K819	
2	LG7371054	1	MJ PCB ASSY, MFC820CW/640CW FOR GER/UK/FRA/BEL/NLD/CHE/SPA/ITA/POR/PND		B53K887	CHG
2	LG7371056	1	MJ PCB ASSY, MFC820CW/640CW FOR CHN/ASA/OCE		B53K887	CHG
3	LG5544001	1	POWER SUPPLY PCB UNIT FOR GER/UK/FRA/BEL/NLD/CHE/SPA/ITA/OCE/PND	√		
3	LG6080001	1	POWER SUPPLY PCB UNIT FOR CHN	√		
3	LG5743001	1	POWER SUPPLY PCB UNIT FOR ASA	√		
4	LG6846001	1	WLAN PCB			chg

www.drukparts.pl

10 ACCESSORIES

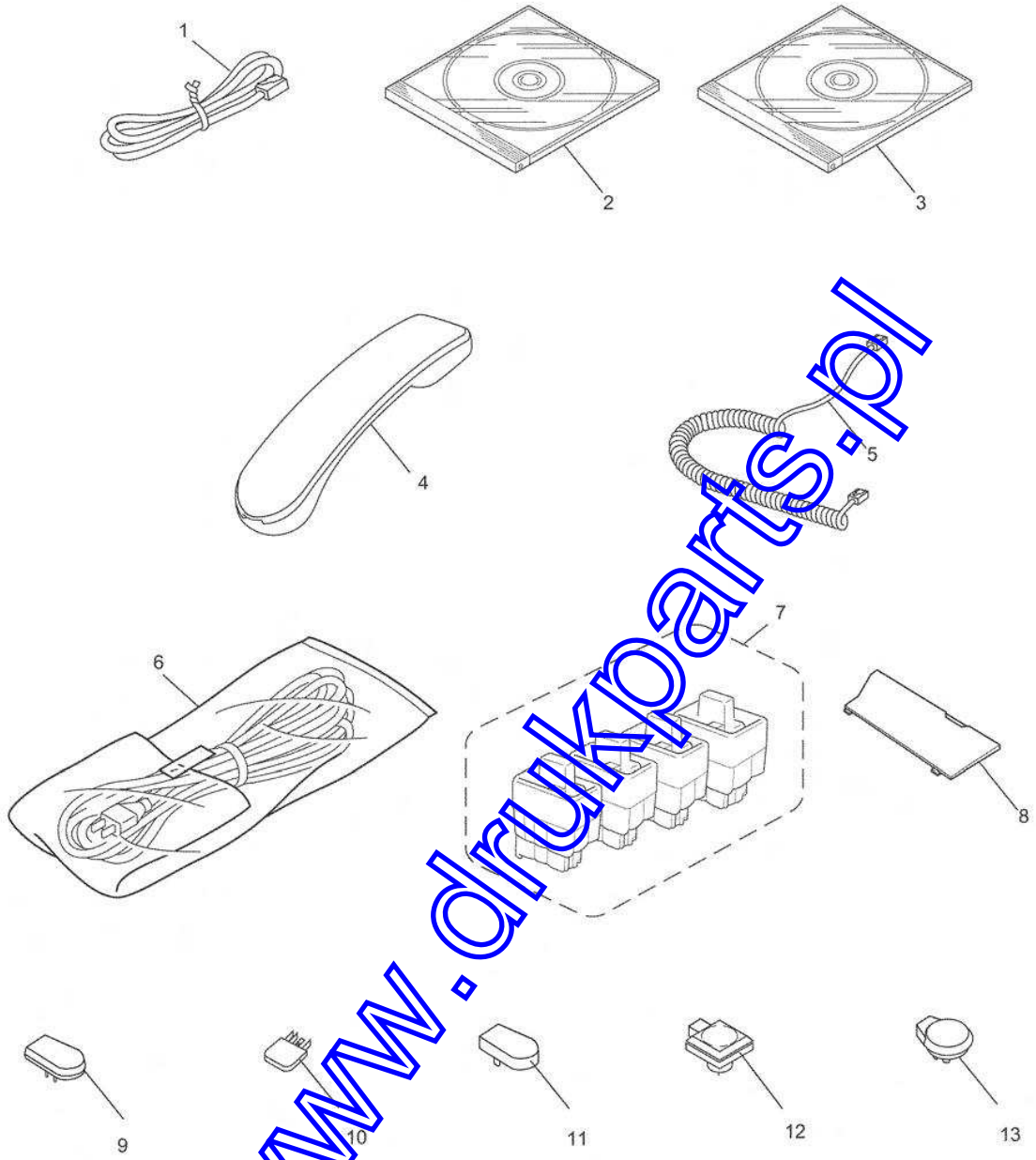

www.drukparts.pl

REF No.	CODE	Q'TY	DESCRIPTION	RECOMMEND	REMARKS
1	UG3625001	1	TELEPHONE LINE CORD, MFC640CW/820CW FOR GER		
1	UG3626001	1	TELEPHONE LINE CORD, MFC640CW/820CW FOR UK		
1	UG3627001	1	TELEPHONE LINE CORD, MFC640CW/820CW FOR FRA		
1	UG1575001	1	TELEPHONE LINE CORD, MFC640CW/820CW FOR BEL		
1	LG3077001	1	TELEPHONE LINE CORD, MFC640CW/820CW FOR NLD/SPA/POR/CHN/ASA/OCE		
1	LG7202001	1	TELEPHONE LINE CORD, MFC640CW/820CW FOR CHE		CHG
1	UG3634001	1	TELEPHONE LINE CORD, MFC640CW/820CW FOR ITA		
1	UG3290001	1	TELEPHONE LINE CORD, MFC640CW/820CW FOR OCE		
1	LG5827001	1	TELEPHONE LINE CORD, MFC640CW/820CW FOR PND		
2	LP0334001	1	CD-ROM ASSY, DCP340CW FOR GER/UK/CHE <Windows>		
2	LP0344001	1	CD-ROM ASSY, MFC640CW FOR GER/UK/FRA/CHE/ASA/OCE <Windows>		
2	LP1991001	1	CD-ROM ASSY, MFC820CW FOR GER/UK/FRA/CHE <Windows>		chg
2	LP0336001	1	CD-ROM ASSY, DCP340CW FOR FRA/PND <Windows>		
2	LP0346001	1	CD-ROM ASSY, MFC640CW FOR BEL/NLD/PND <Windows>		
2	LP0350001	1	CD-ROM ASSY, MFC820CW FOR BEL/NLD/PND <Windows>		
2	LP0345001	1	CD-ROM ASSY, MFC640CW FOR SPA/ITA <Windows>		
2	LP0349001	1	CD-ROM ASSY, MFC820CW FOR SPA/ITA/POR <Windows>		
2	LP0335001	1	CD-ROM ASSY, DCP340CW FOR ITA/IBR <Windows>		
2	LP0368001	1	CD-ROM ASSY, MFC640CW FOR CHN <Windows>		
2	LP0337001	1	CD-ROM ASSY, DCP340CW FOR PND <Windows>		
2	LP0347001	1	CD-ROM ASSY, MFC640CW FOR PND <Windows>		
2	LP0351001	1	CD-ROM ASSY, MFC820CW FOR PND <Windows>		
~~3~~	~~LP0353001~~	~~1~~	~~CD-ROM ASSY, DCP340CW FOR GER/UK/FRA/CHE/ITA/IBR <Macintosh>~~		del
~~3~~	~~LP0356001~~	~~1~~	~~CD-ROM ASSY, MFC640CW FOR GER/UK/FRA/CHE/SPA/ITA/ASA/OCE <Macintosh>~~		del
~~3~~	~~LP0358001~~	~~1~~	~~CD-ROM ASSY, MFC820CW FOR GER/UK/FRA/CHE/SPA/ITA/POR <Macintosh>~~		del
3	LP0357001	1	CD-ROM ASSY, MFC640CW FOR GER/UK/FRA/BEL/NLD/CHE/SPA/ITA/ASA/OCE/PND <Macintosh>		
3	LP0359001	1	CD-ROM ASSY, MFC820CW FOR GER/UK/FRA/BEL/NLD/CHE/SPA/ITA/POR/PND <Macintosh>		
3	LP0354001	1	CD-ROM ASSY, DCP340CW FOR GER/UK/FRA/CHE/ITA/PND/IBR <Macintosh>		
4	LF1518018	1	HANDSET ASSY, MFC640CW		
5	UL8019005	1	HANDSET CURLED CORD ASSY, MFC640CW		
6	LG5717001	1	AC CORD BAG ASSY LF VDE FOR GER/FRA/BEL/NLD/SPA/ITA/ASA/PND		
6	LG5692001	1	AC CORD BAG ASSY LF UK FOR UK/ASA		
6	LG5732001	1	AC CORD BAG ASSY LF DK FOR CHE		
6	LG5735001	1	AC CORD BAG ASSY LF SEV FOR CHE		
6	LG5734001	1	AC CORD BAG ASSY LF SEV FOR OCE		
6	LG5736001	1	AC CORD BAG ASSY LF DEMKO FOR PND		
7	LF7986001	1	PROTECTION CARTRIDGE SUPPLY ASSY		
8	LF5555001	1	SIDE COVER ASSY, MFC640CW		
9	LG3622001	1	TELEPHONE PLUG, MFC640CW/MFC820CW FOR NLD		
10	LG3509001	1	TELEPHONE PLUG, MFC640CW/MFC820CW FOR OCE		
11	LG5828001	1	TELEPHONE PLUG, MFC640CW/MFC820CW FOR PND <DEN>		
12	LG5829001	1	TELEPHONE PLUG, MFC640CW/MFC820CW FOR PND <FIN>		
13	LG5830001	1	TELEPHONE PLUG, MFC640CW/MFC820CW FOR PND <SWE>		

www.pukparts.pl

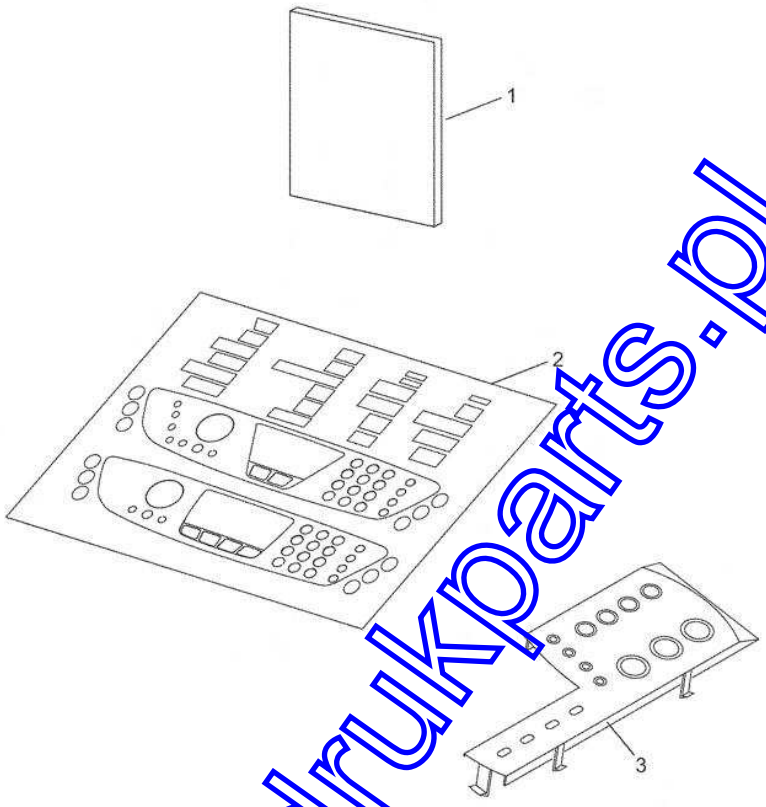

www.drukparts.pl

REF No.	CODE	Q'TY	DESCRIPTION	RECOMMEND	REMARKS
1	LP0744003	1	OWNER'S GUIDE, DCP340CW FOR GER/CHE <GERMAN>		
1	LP0834003	1	OWNER'S GUIDE, MFC640CW FOR GER		
1	LP0908003	1	OWNER'S GUIDE, MFC820CW FOR GER		
1	LP0744004	1	OWNER'S GUIDE, DCP340CW FOR UK		
1	LP0834004	1	OWNER'S GUIDE, MFC640CW FOR UK		
1	LP0908004	1	OWNER'S GUIDE, MFC820CW FOR UK		
1	LP0744005	1	OWNER'S GUIDE, DCP340CW FOR FRA/CHE <FRENCH>		
1	LP0744009	1	OWNER'S GUIDE, DCP340CW FOR FRA <DUTCH FOR BELGIUM>		
1	LP0834005	1	OWNER'S GUIDE, MFC640CW FOR FRA <FRENCH>		
1	LP0908005	1	OWNER'S GUIDE, MFC820CW FOR FRA <FRENCH>		
1	LP0834008	1	OWNER'S GUIDE, MFC640CW FOR BEL <FRENCH>		
1	LP0834058	1	OWNER'S GUIDE, MFC640CW FOR BEL/CHE <DUTCH>		
1	LP0908008	1	OWNER'S GUIDE, MFC820CW FOR BEL <FRENCH>		
1	LP0908058	1	OWNER'S GUIDE, MFC820CW FOR BEL/CHE <DUTCH>		
1	LP0834009	1	OWNER'S GUIDE, MFC640CW FOR NLD		
1	LP0908009	1	OWNER'S GUIDE, MFC820CW FOR NLD		
1	LP0834010	1	OWNER'S GUIDE, MFC640CW FOR CHE <GERMAN>		
1	LP0908010	1	OWNER'S GUIDE, MFC820CW FOR CHE <GERMAN>		
1	LP0834015	1	OWNER'S GUIDE, MFC640CW FOR SPA		
1	LP0908015	1	OWNER'S GUIDE, MFC820CW FOR SPA		
1	LP0744016	1	OWNER'S GUIDE, DCP340CW FOR ITA		
1	LP0834016	1	OWNER'S GUIDE, MFC640CW FOR ITA		
1	LP0908016	1	OWNER'S GUIDE, MFC820CW FOR ITA		
1	LP0908018	1	OWNER'S GUIDE, MFC820CW FOR POR		
1	LP0834020	1	OWNER'S GUIDE, MFC640CW FOR CHN		
1	LP0834040	1	OWNER'S GUIDE, MFC640CW FOR ASA/OCE		
1	LP0744015	1	OWNER'S GUIDE, DCP340CW FOR IBR<SPANISH>		
1	LP0744018	1	OWNER'S GUIDE, DCP340CW FOR IBR <PORTUGUESE>		
1	LP0834007	1	OWNER'S GUIDE, MFC640CW FOR PND <NORWAY/SWEDEN>		
1	LP0834012	1	OWNER'S GUIDE, MFC640CW FOR PND <FINLAND/DENMARK>		
1	LP0908007	1	OWNER'S GUIDE, MFC820CW FOR PND <NORWAY/SWEDEN>		
1	LP0908012	1	OWNER'S GUIDE, MFC820CW FOR PND <FINLAND/DENMARK>		
2	----		NOT USED		
3	LF7663004	1	PRINTED EX PANEL ASSY, DCP340CW FOR GER/CHE <GERMAN>		
3	LF7665004	1	PRINTED EX PANEL ASSY, DCP340CW FOR UK/FRA/PND <ENGLISH>		
3	LF7667004	1	PRINTED EX PANEL ASSY, DCP340CW FOR FRA/CHE <FRENCH>		
3	LF7669004	1	PRINTED EX PANEL ASSY, DCP340CW FOR FRA <DUTCH>		
3	LF7671004	1	PRINTED EX PANEL ASSY, DCP340CW FOR ITA		
3	LF7673004	1	PRINTED EX PANEL ASSY, DCP340CW FOR IBR <SPANISH>		
3	LF7675004	1	PRINTED EX PANEL ASSY, DCP340CW FOR IBR <PORTUGUESE>		

www.drukparts.pl

12 PACKAGING

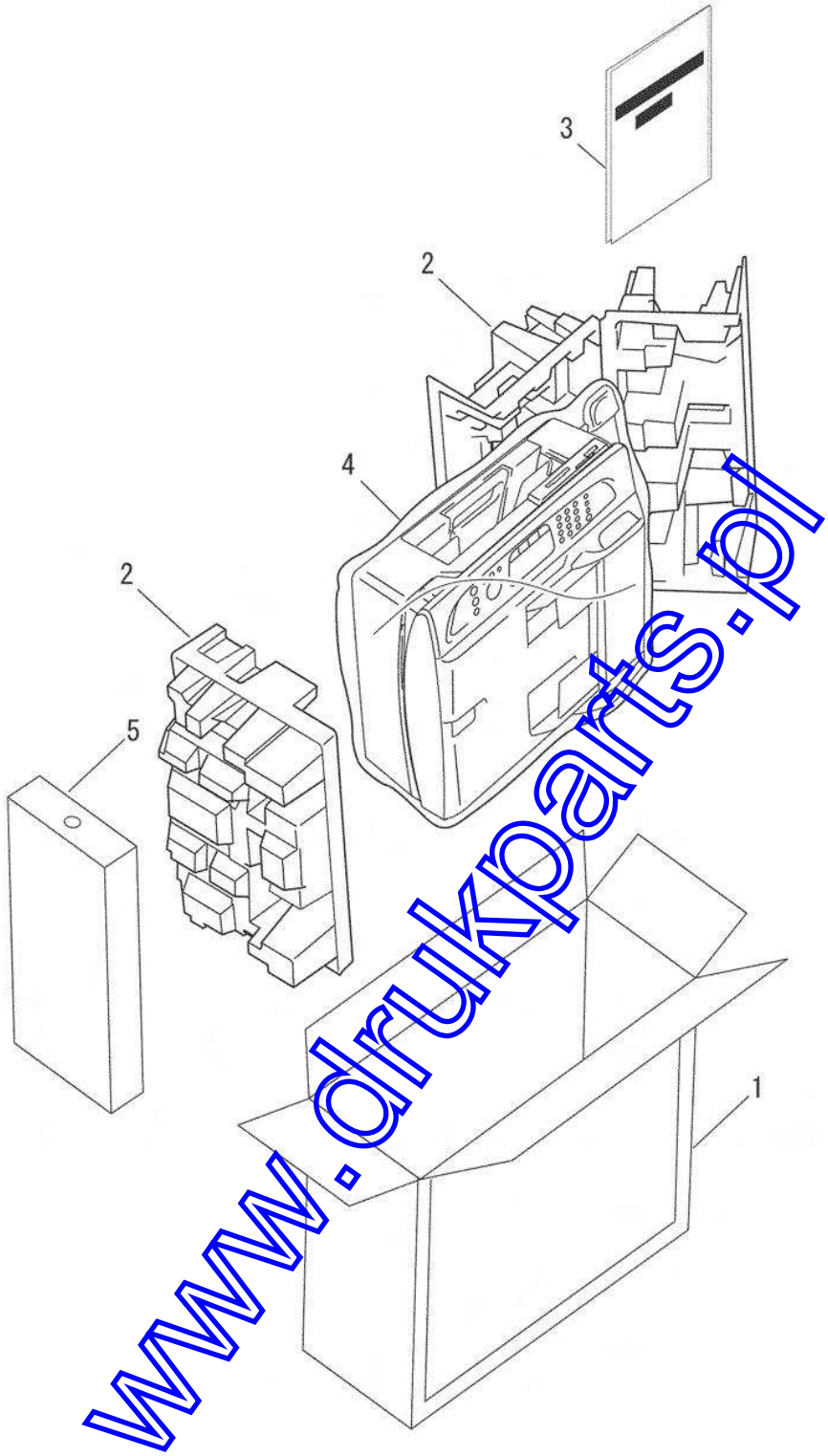

www.drukparts.pl

REF No.	CODE	Q'TY	DESCRIPTION	RECOMMEND	REMARKS
1	LP0586001	1	CARTON, BROTHER, DCP340CW	√	
1	LP0588001	1	CARTON, BROTHER, MFC640CW FOR GER/UK/FRA/BEL/NLD/CHE/SPA/ITA/PND	√	
1	LP0875001	1	CARTON, BROTHER, MFC640CW FOR CHN	√	
1	LP0601001	1	CARTON, BROTHER, MFC640CW FOR ASA/OCE	√	
1	LP0590001	1	CARTON, BROTHER, MFC820CW	√	
2	LF5095001	1	PULP CUSHION ASSY, MFC640CW		
~~2~~	~~LP0986001~~	~~1~~	~~PULP CUSHION ASSY, MFC640CW FOR CHN~~		DEL
2	LF5123001	1	PULP CUSHION ASSY, DCP340CW/MFC820CW		
3	LP0733003	1	QUICK SETUP GUIDE, DCP340CW FOR GER/CHE <GERMAN>		
3	LP0835003	1	QUICK SETUP GUIDE, MFC640CW FOR GER		
3	LP0909003	1	QUICK SETUP GUIDE, MFC820CW FOR GER		
3	LP0733004	1	QUICK SETUP GUIDE, DCP340CW FOR UK		
3	LP0835004	1	QUICK SETUP GUIDE, MFC640CW FOR UK		
3	LP0909004	1	QUICK SETUP GUIDE, MFC820CW FOR UK		
3	LP0733005	1	QUICK SETUP GUIDE, DCP340CW FOR FRA/CHE <FRENCH>		
3	LP0733009	1	QUICK SETUP GUIDE, DCP340CW FOR FRA <DUTCH FOR		
3	LP0835005	1	QUICK SETUP GUIDE, MFC640CW FOR FRA <FRENCH>		
3	LP0909005	1	QUICK SETUP GUIDE, MFC820CW FOR FRA <FRENCH>		
3	LP0835008	1	QUICK SETUP GUIDE, MFC640CW FOR BEL <DUTCH>		
3	LP0835058	1	QUICK SETUP GUIDE, MFC640CW FOR BEL/CHE <FRENCH>		
3	LP0909008	1	QUICK SETUP GUIDE, MFC820CW FOR BEL <DUTCH>		
3	LP0909058	1	QUICK SETUP GUIDE, MFC820CW FOR BEL/CHE <FRENCH>		
3	LP0835009	1	QUICK SETUP GUIDE, MFC640CW FOR NLD		
3	LP0909009	1	QUICK SETUP GUIDE, MFC820CW FOR NLD		
3	LP0835010	1	QUICK SETUP GUIDE, MFC640CW FOR CHE <GERMAN>		
3	LP0909010	1	QUICK SETUP GUIDE, MFC820CW FOR CHE <GERMAN>		
3	LP0835015	1	QUICK SETUP GUIDE, MFC640CW FOR SPA		
3	LP0909015	1	QUICK SETUP GUIDE, MFC820CW FOR SPA		
3	LP0733016	1	QUICK SETUP GUIDE, DCP340CW FOR ITA		
3	LP0835016	1	QUICK SETUP GUIDE, MFC640CW FOR ITA		
3	LP0909016	1	QUICK SETUP GUIDE, MFC820CW FOR ITA		
3	LP0909018	1	QUICK SETUP GUIDE, MFC820CW FOR POR		
3	LP0835020	1	QUICK SETUP GUIDE, MFC640CW FOR CHN		
3	LP0835040	1	QUICK SETUP GUIDE, MFC640CW FOR ASA/OCE		
3	LP0733007	1	QUICK SETUP GUIDE, DCP340CW FOR PND <NORWEGIAN>		
3	LP0733012	1	QUICK SETUP GUIDE, DCP340CW FOR PND <FINNISH>		
3	LP0733013	1	QUICK SETUP GUIDE, DCP340CW FOR PND <DANISH>		
3	LP0733026	1	QUICK SETUP GUIDE, DCP340CW FOR PND <SWEDISH>		
3	LP0835007	1	QUICK SETUP GUIDE, MFC640CW FOR PND <NORWEGIAN>		
3	LP0835012	1	QUICK SETUP GUIDE, MFC640CW FOR PND <FINNISH>		
3	LP0835013	1	QUICK SETUP GUIDE, MFC640CW FOR PND <DANISH>		
3	LP0835026	1	QUICK SETUP GUIDE, MFC640CW FOR PND <SWEDISH>		
3	LP0909007	1	QUICK SETUP GUIDE, MFC820CW FOR PND <NORWEGIAN>		
3	LP0909012	1	QUICK SETUP GUIDE, MFC820CW FOR PND <FINNISH>		
3	LP0909013	1	QUICK SETUP GUIDE, MFC820CW FOR PND <DANISH>		
3	LP0909026	1	QUICK SETUP GUIDE, MFC820CW FOR PND <SWEDISH>		
3	LP0733015	1	QUICK SETUP GUIDE, DCP340CW FOR IBR <SPANISH>		
3	LP0733018	1	QUICK SETUP GUIDE, DCP340CW FOR IBR <PORTUGUESE>		
3	LP0370001	1	QUICK SETUP GUIDE WEB TRANS5.0, DCP340CW		
4	LF0969001	1	PE BAG 620X800H P		
5	LF5126001	1	ACCESSORIES BOX		

www.drumparts.pl

13. OTHERS

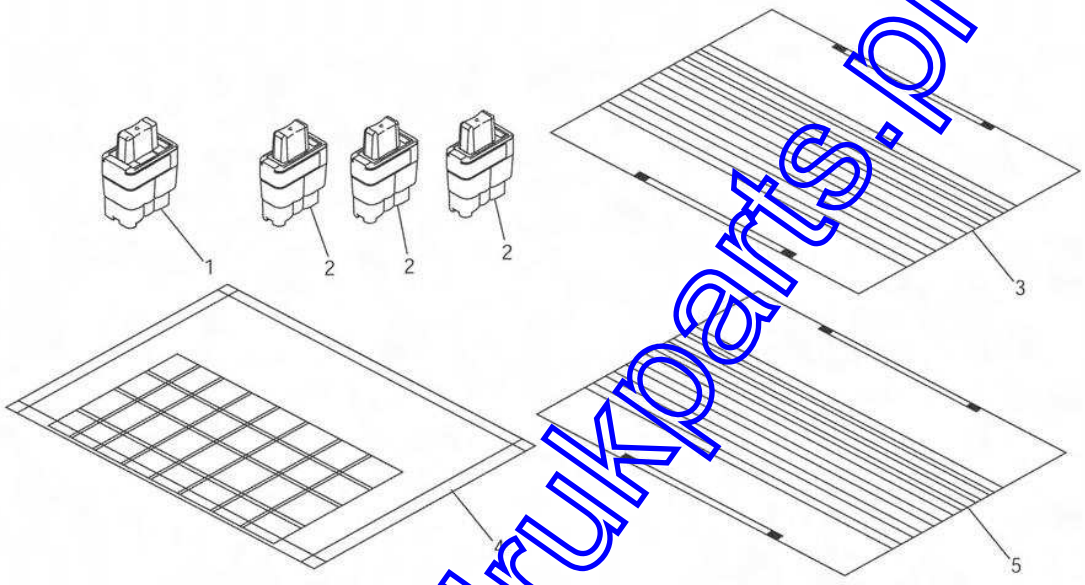

www.drukparts.pl

List13(OTHERS)

REF No.	CODE	Q'TY	DESCRIPTION	RECOMMEND	REMARKS
1	LK1349001	1	DUMMY CARTRIDGE, BLACK < For ink drainage >		
2	LK1350001	3	DUMMY CARTRIDGE, COLOR < For ink drainage >		
3	UF8263001	1	TEST CHART-027		
4	UF9258001	1	COLOR TEST CHART CTC-001		
5	UF4600001	1	CONTRAST CHART TC-023		

www.drukparts.pl

brother

www.drukparts.pl

PL-FAX123
8CA836
Ver. M-1