Brother Facsimile Equipment
PARTS REFERENCE LIST

MODEL:
MFC-9440CN/DCP-9040CN

www.drukparts.pl

Read this list thoroughly before maintenance work.

Keep this list in a convenient place for quick and easy reference at all times.

April 2007
PL-FAX143
8CE113
Ver.F-1

NOTE FOR USING THIS PARTS REFERENCE LIST

1. In the case of ordering parts, it is necessary to mention the following items;
   (1) Code
   (2) Q'ty
   (3) Description
   (4) Symbol (PCB No. etc)
   Note: Orders without Parts Code or Tool No. can not be accepted.

< Example >

	(1)	(2)	(3)	(4)	
REF.NO.	CODE	Q'TY	DESCRIPTION	SYMBOL	REMARK

2. Design-changed parts :
   If any of the parts is changed, one of the following symbols is indicated in the REMARK column.

   CHG(chg) : The parts is changed to a new parts.
   ADD(add) : The parts is newly added.
   DEL(del) : The parts is deleted.
   Symbol in capital letters indicates the latest parts change information in the page.

3. Parts change will be informed by the Parts change information.

4. Parts are subject to change in design without prior notice.

COUNTRIES

U.S.A ---- US
CANADA ---- CAN
GERMANY ---- GER
UNITED KINGDOM ---- UK
FRANCE ---- FRA
BELGIUM ---- BEL
NETHERLANDS ---- NLD
SWITZERLAND ---- CHE
IRELAND ---- IRE
SPAIN ---- SPA
ITALY ---- ITA
PORTUGAL ---- POR
CHINA ----CHN
SOUTH AFRICA ---- ZAF

ASIA (SINGAPORE&GULF) ----ASA
BRAZIL-----BRA
RUSSIA ---- RUS
AUSTRALIA ----ARL
NEW ZEALAND ----NZ
PAN NORDIC
(NORWAY/FINLAND/DENMARK/SWEDEN) ---- PND
EEU-GENERIC ----EEU

www.drukparts.pl

CONTENTS

1. FRAME UNIT 1
2. DRIVE 3
3. LASER UNIT 5
4. PAPER FEEDER 7
5. MP UNIT 9
6. PAPER TRAY 11
7. FUSER UNIT 13
8. PAPER EJECT 15
9. COVERS&LABELS 17
10. DOCUMENT SCANNER 19
11. ADF 21
12. PANEL 23
13. PCB 26
14. ACCESSORIES 28
15. PRINTED MATERIAL 31
16. PACKING MATERIALS 33
17. PERIODICAL MAINTENANCE PART 36

www.drukparts.pl

1. FRAME UNIT

REF No.	CODE	Q'TY	DESCRIPTION	SYMBOL	REMARKS
1	LR0402001	4	NEW TONER ACTUATOR		
2	LR0403001	4	NEW TONER ACTUATOR SPRING		
3	UH2208001	2	RUBBER FOOT		
4	LM9189001	1	DEVELOP RELEASE SENSOR PCB ASSY	B512243	
5	LM9210001	4	TONER LED PCB ASSY	B512237	
6	LR1094001	4	LED HOLDER		
7	LM9211001	1	TONER SENSOR PCB ASSY K (TE/NEW)		
8	LM9334001	1	TONER SENSOR PCB ASSY Y (TE/NEW)		
9	LM9335001	1	TONER SENSOR PCB ASSY M (TE/NEW)		
10	LM9336001	1	TONER SENSOR PCB ASSY C (TE/NEW)		
11	UL9037001	4	LED HOLDER		
12	LR0523001	1	BELT CLEANER RELEASE ASSY		
12-1	LM9218001	1	BELT CLEANER RELEASE SENSOR PCB ASSY	B512233	
12-2	085310816	1	TAPTITE BIND B M3X8		
13	LR0532001	1	WASTE TONER SENSOR HOLDER ASSY		
13-1	LM9221001	2	WASTE TONER SENSOR		
14	LR0589001	1	AIR INTAKE FAN(AIR)		
15	LR0217001	1	BELT UNIT DRIVE MOTOR		
16	LR0903001	1	LVPS FAN (PS)		
17	LR0906001	1	FUSER UNIT FAN (FU)		
18	LR1225001	1	DRUM UNIT FAN (OPC)		
19	0A2301603	4	SCREW PAN (P WASHER) M3X16		
20	085310816	3	TAPTITE BIND B M3X8		
21	087310816	1	TAPTITE CUP B M3X8		
22	LR1820001	1	ALUMINUM SHEET FRAME		

www.drukparts.pl

1.FRAME UNIT

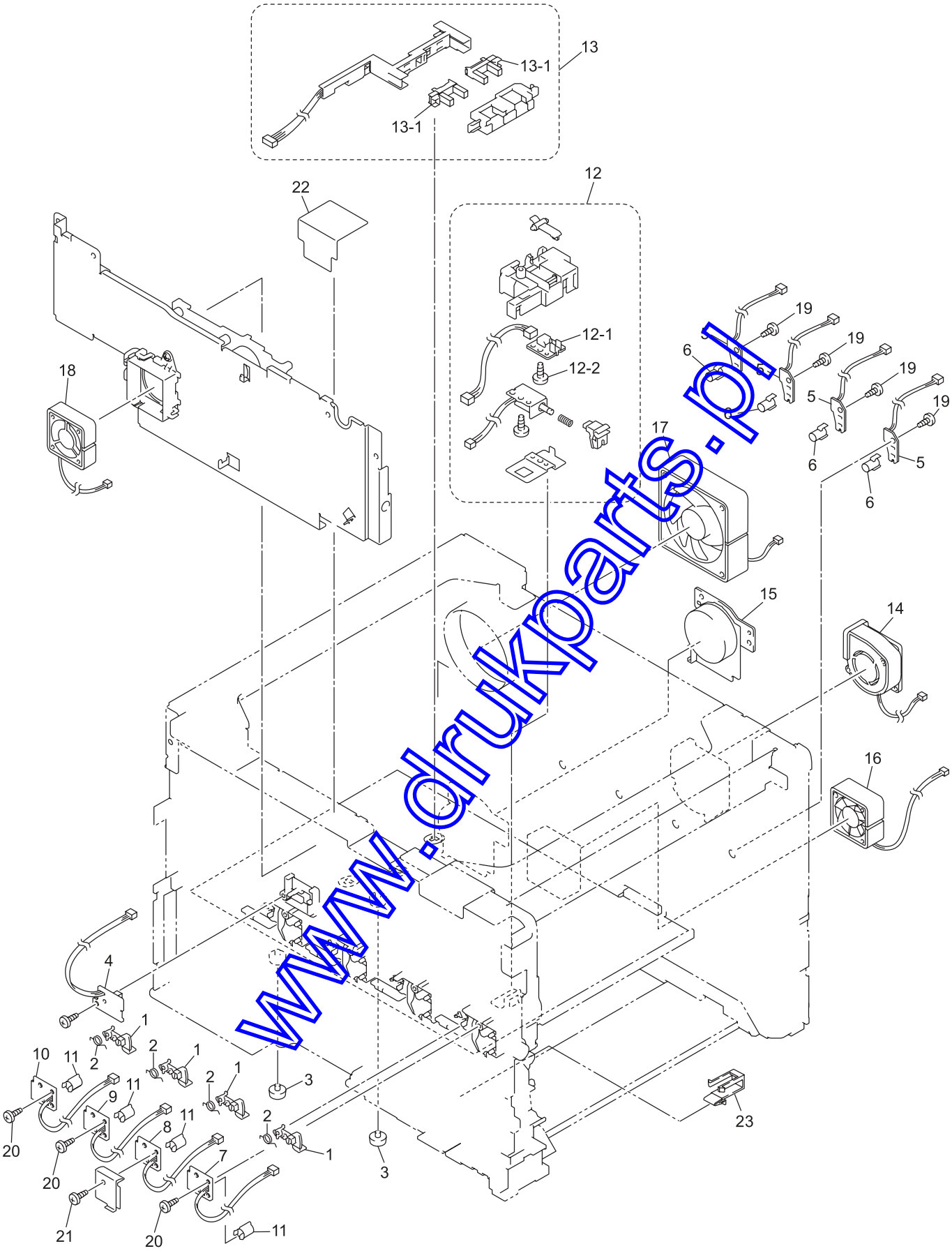

www.drukparts.pl

2. DRIVE

REF No.	CODE	Q'TY	DESCRIPTION	SYMBOL	REMARKS
			CLEANER DRIVE		
A1	LR1246001	1	DRIVE FRAME UNIT ASSY		
A1-1	LR0440001	1	PAPER FEED/BELT CLEANER MOTOR ASSY		
A1-2	087320616	4	TAPTITE CUP S M3X6		
			DRUM DRIVE		
B1	LR1904001	1	DRUM DRIVE ASSY		
B1-1	LM9192001	1	DRUM PHASE SENSOR PCB ASSY1	B512236	
B1-2	LM9337001	1	DRUM PHASE SENSOR PCB ASSY2	B512236	
B1-3	Z31008001	1	DRUM DRIVE MOTOR1		
B1-4	Z31012001	1	DRUM DRIVE MOTOR2		
B1-5	085320616	6	TAPTITE BIND S M3X6		
			DEVELOP DRIVE		
C1	LR0193001	1	DEVELOP DRIVE MOTOR ASSY		
C2	087320616	3	TAPTITE CUP S M3X6		
			DRUM DRAW DRIVE		
D1	LR1006001	1	RELEASE RACK		
D2	LR1007001	1	RELEASE RACK PLATE		
D3	087310816	1	TAPTITE CUP B M3X8		
D4	LR1008001	1	RELEASE RACK SPRING		
D5	LR1228001	1	THM/HUM SENSOR HOLDER ASSY		
D6	LR0803001	1	DEVELOP PRESS DRIVE L ASSY		
D6-1	LR0823001	1	DEVELOP RELEASE MOTOR ASSY		
D6-2	LR0827001	1	FRONT COVER INTERLOCK SWITCH ASSY		
D7	LR1014001	1	DRUM LOCK LEVER L		
D8	LR1018001	1	DRUM LOCK LEVER R		
D9	LR1710001	1	DRUM LOCK LEVER LABEL		
D10	087320616	5	TAPTITE CUP S M3X6		
D11	LR1023001	1	DRUM LOCK GEAR 24		ADD
D12	LR0307001	1	HOOK B		ADD
D13	LR0308001	1	HOOK C		ADD
D14	LR0327001	1	BUSH7		ADD
D15	LR0910001	1	HOOK SPRING BC		ADD
D16	LR0310001	1	PP GEAR CLUTCH CAM SPRING		ADD
D17	LR0296001	3	BUSH5		ADD

www.drukparts.pl

2.DRIVE

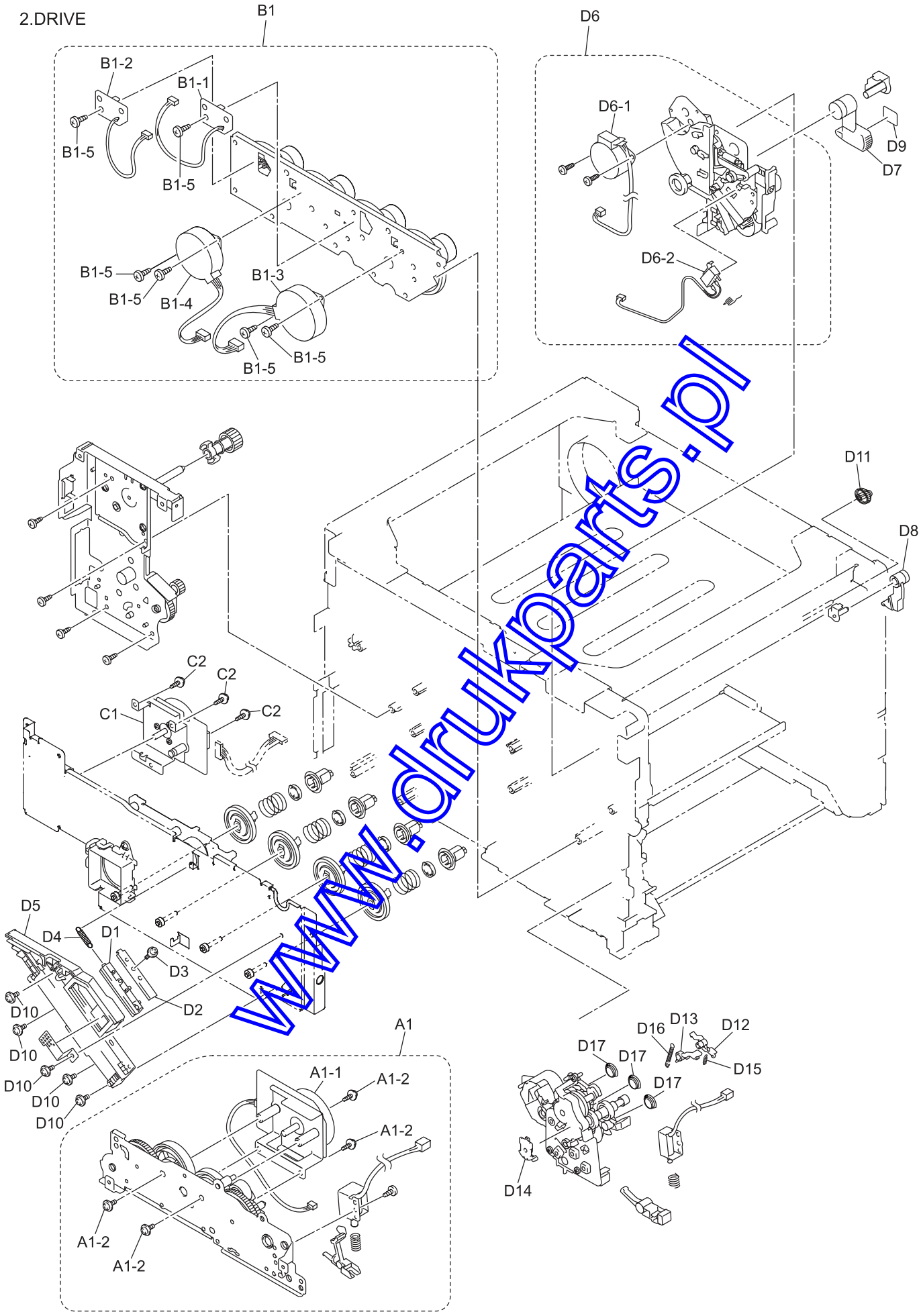

www.drukparts.pl

3. LASER UNIT

REF No.	CODE	Q'TY	DESCRIPTION	REMARKS
1	LR1461001	1	LASER UNIT (SP)	
2	LJ0908001	1	LASER CAUTION LABEL	
3	LM5867001	7	TAPTITE CUP S M3X6 SR	

www.drukparts.pl

3.LASER UNIT

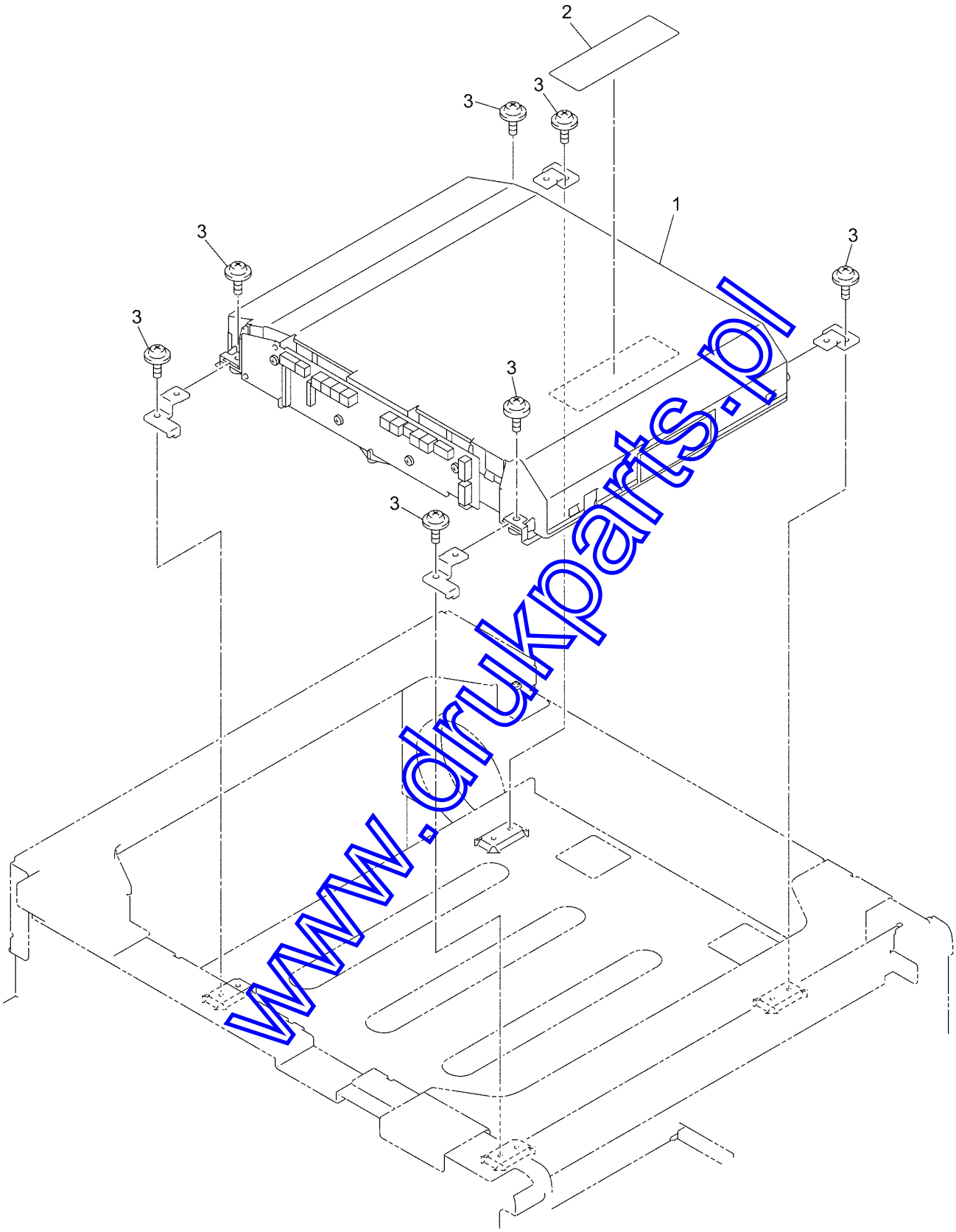

www.drukparts.pl

4. PAPER FEEDER

REF No.	CODE	Q'TY	DESCRIPTION	REMARKS
1	LR0107001	1	PAPER FEED FRAME UNIT	
1-1	LM9185001	1	T1 PE/EDGE SENSOR PCB ASSY	
1-2	LR1914001	1	ROLLER HOLDER ASSY	

www.drukparts.pl

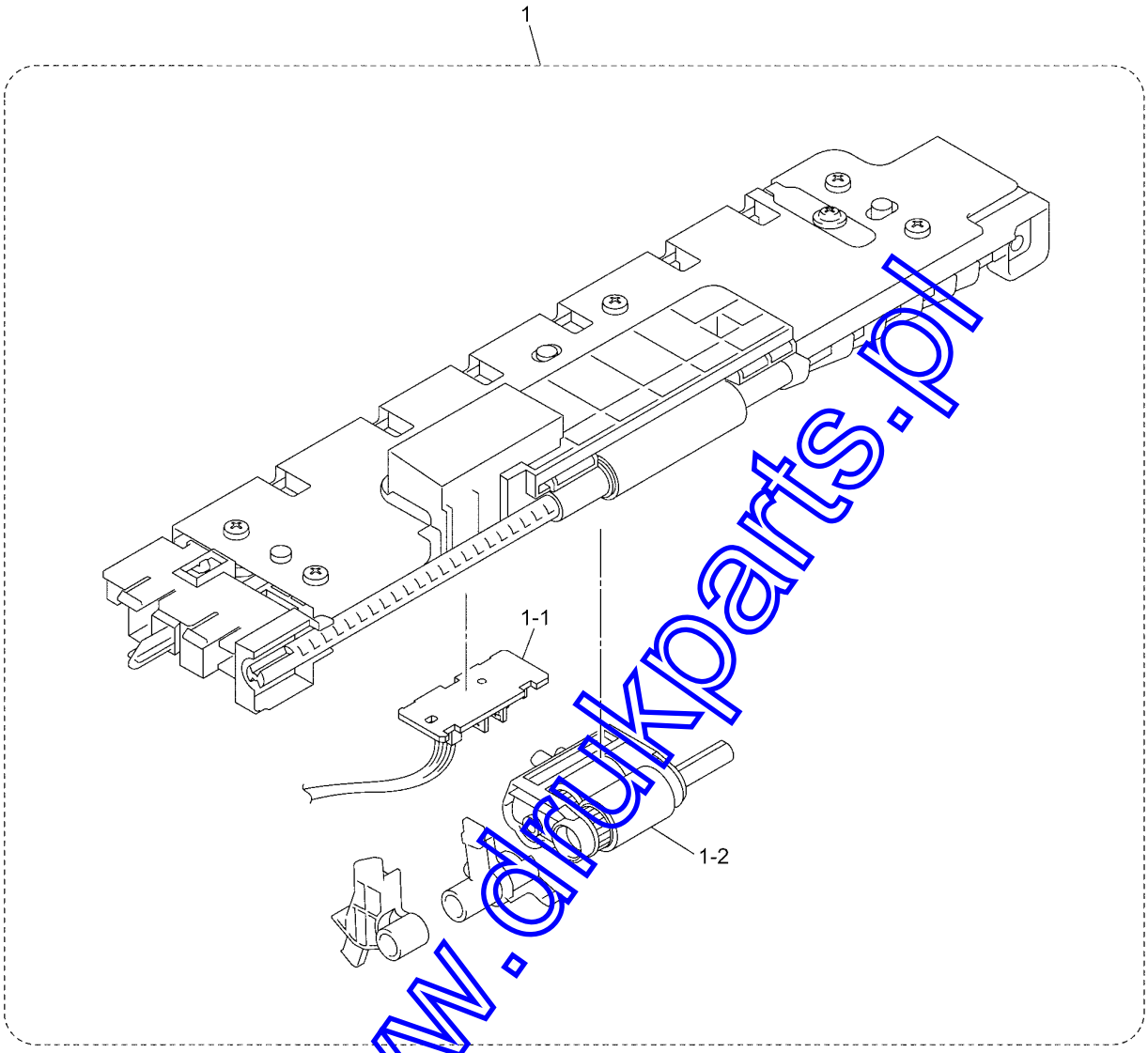

www.drukparts.pl

5. MP UNIT

REF No.	CODE	Q'TY	DESCRIPTION	REMARKS
1	LR1768001	1	FRONT DOOR UNIT ASSY (SP)	
1-1	LR1601001	1	FRONT DOOR MAIN	
1-2	LR0707001	1	FRONT DOOR SUB	
1-3	LR1037001	2	HOOK	
1-4	LR1676001	1	HOOK SPRING L	
1-5	LR1677001	1	HOOK SPRING R	
1-6	LR1025001	2	HOOK SHAFT	
1-7	LR0691001	1	FRONT COVER RELEASE BUTTON	
1-8	LR0692001	1	BUTTON SPRING	
1-9	LR0700001	1	HOOK COVER	
1-10	LR0854001	1	MP PAPER GUIDE ASSY	
1-11	LR0856001	1	MP COVER ASSY	
1-12	LR0716001	1	SEPARATION PAD ASSY MP	
1-13	LR0718001	1	SEPARATION PAD SPRING MP	
1-14	LR1916001	1	MP ROLLER HOLDER ASSY	
1-15	LR0853001	1	MP FEED FRAME COVER	
2	LR0860001	1	HINGE SHAFT L	
3	LR0861001	1	HINGE SHAFT R	
4	LR0862001	2	COLLAR 3	
5	LR1247001	1	BROTHER EMBLEM	
6	LR1248001	1	COLOR LASER LABEL	
7	LR1388001	1	HEATER CAUTION LABEL	
8	LU0233001	1	CAUTION LABEL S 13X40	

www.drukparts.pl

5.MP UNIT

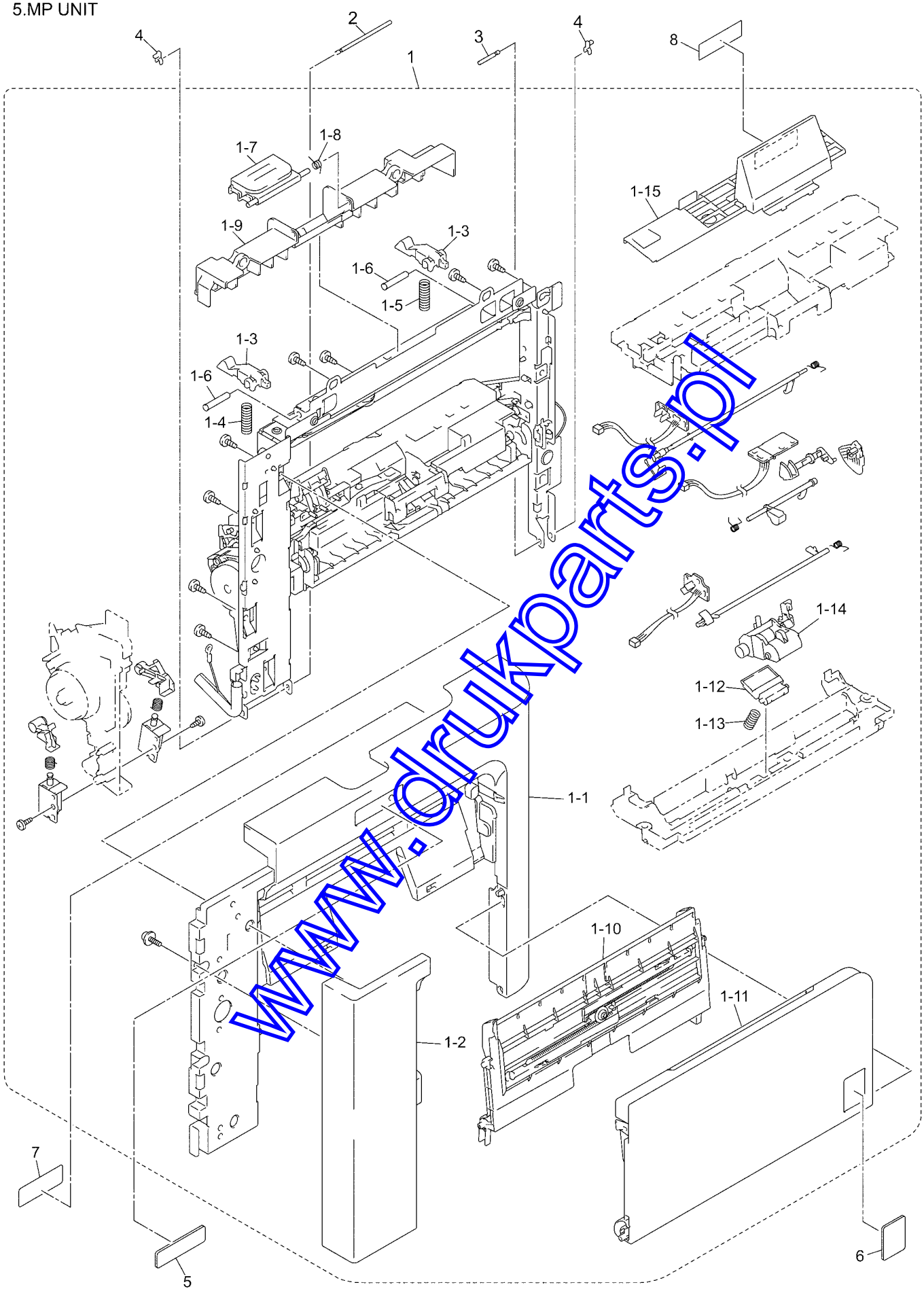

www.drukparts.pl

6. PAPER TRAY

REF No.	CODE	Q'TY	DESCRIPTION	REMARKS
1	LR1186002	1	PAPER TRAY UNIT	
1-1	LM5237001	1	SEPARATION PAD ASSY	
1-2	LR0931001	1	SEPARATION PAD SPRING	

www.drukparts.pl

6.PAPER TRAY

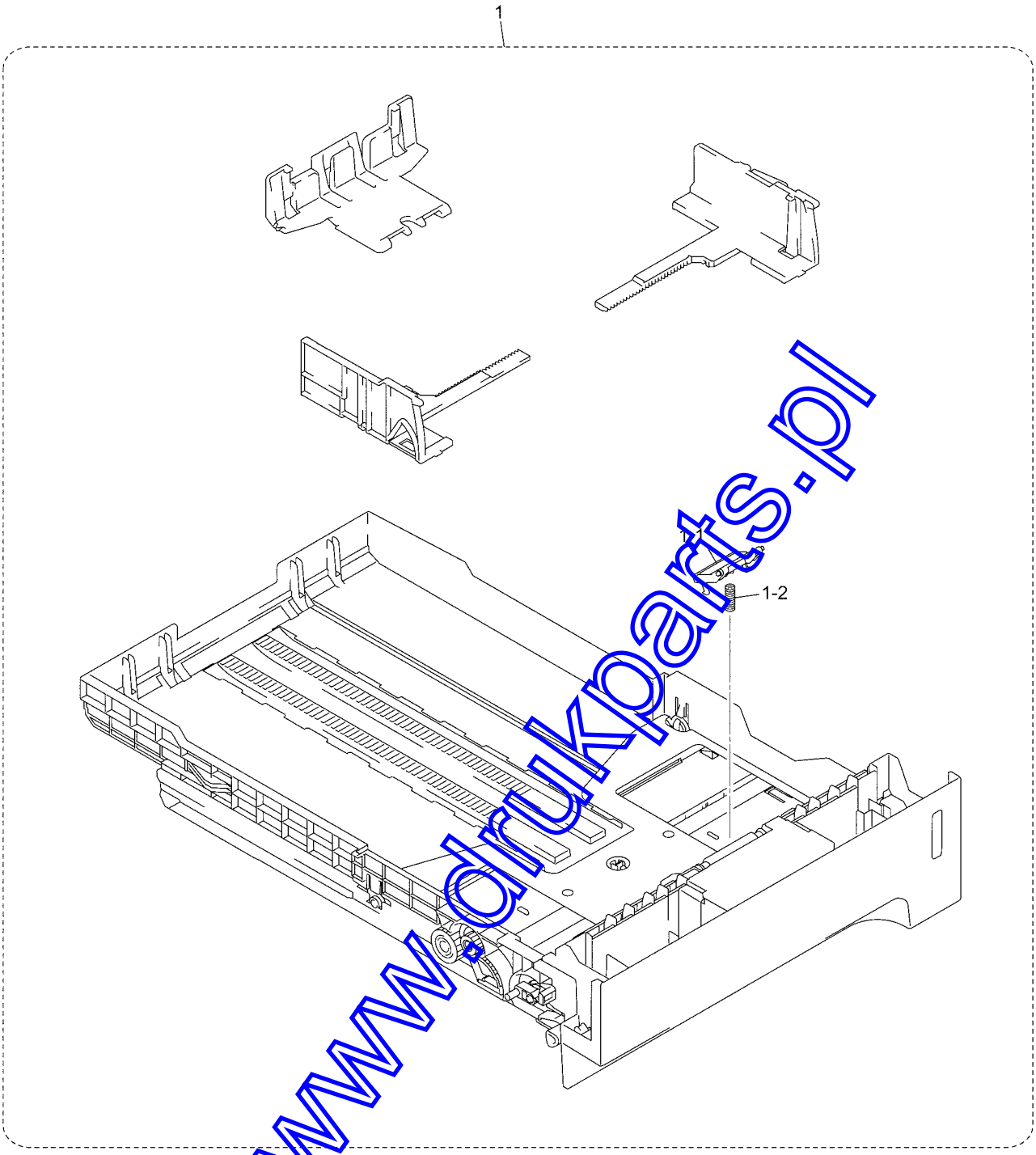

www.drukparts.pl

7. FUSER UNIT

REF No.	CODE	Q'TY	DESCRIPTION	REMARKS
1	LR1962001	1	FUSER UNIT 115V(SP) FOR US/CAN/BRA	chg
1	LR1963001	1	FUSER UNIT 230V(SP) FOR GER/UK/FRA/BEL/NLD/ CHE/IRE/SPA/ITA/POR/CHN/ZAF/ASA/RUS/ARL/NZ/PND/ EEU	chg

www.drukparts.pl

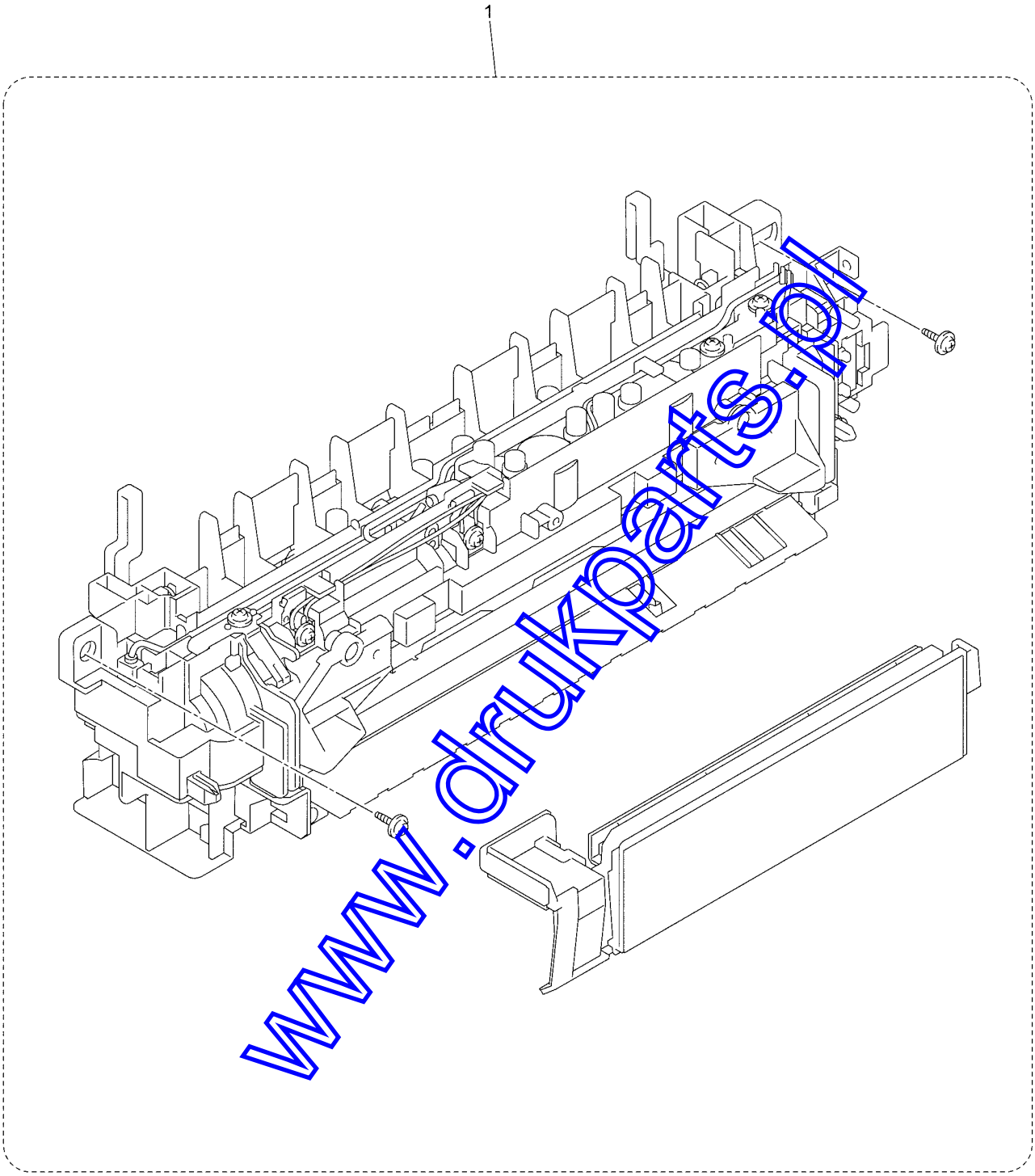

www.drukparts.pl

8. PAPER EJECT

REF No.	CODE	Q'TY	DESCRIPTION	REMARKS
1	LU0534001	1	PAPER EJECT ASSY SX (SP)	CHG

www.drukparts.pl

8.PAPER EJECT

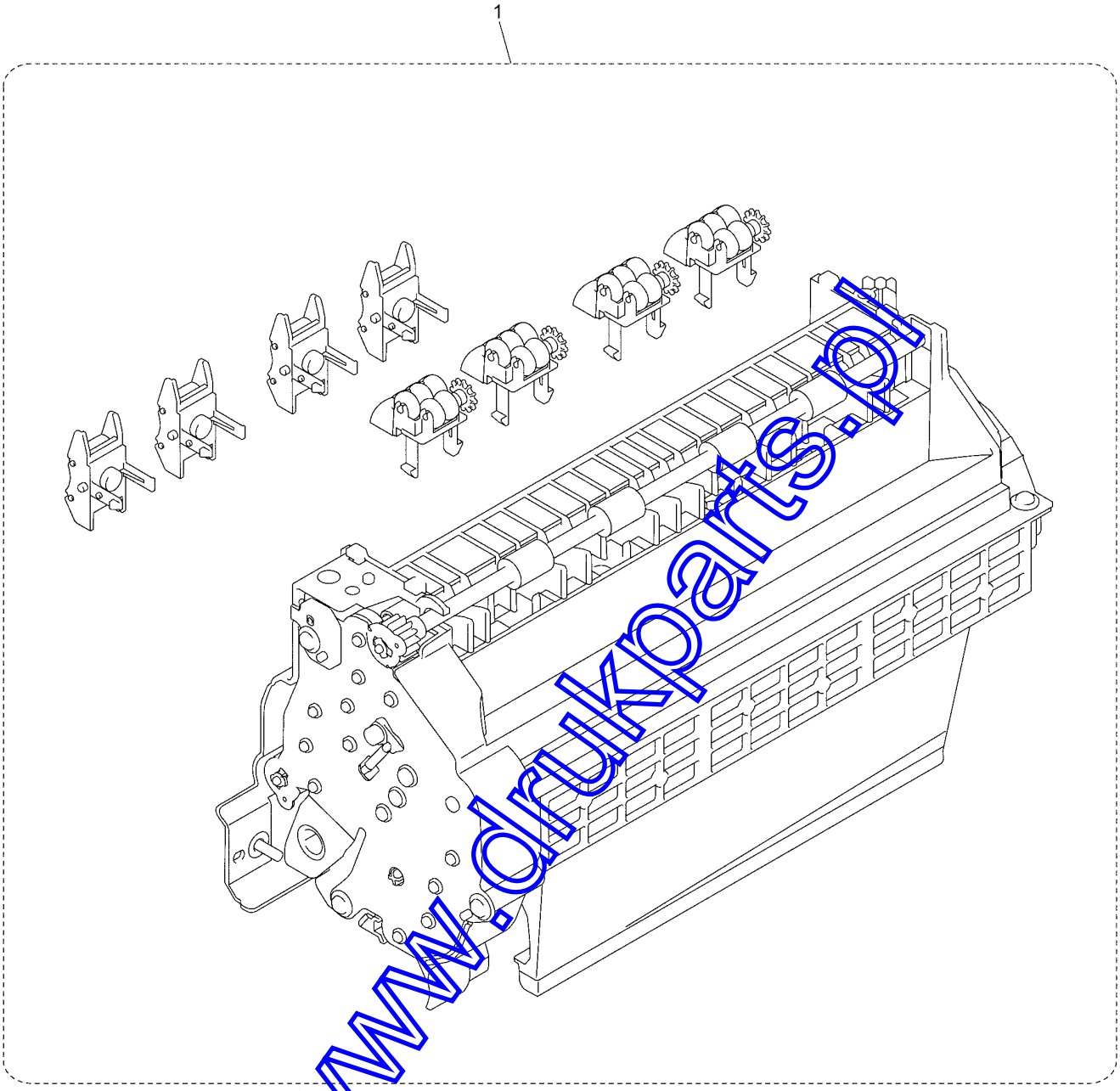

www.drukparts.pl

9. COVERS&LABELS

REF No.	CODE	Q'TY	DESCRIPTION	SYMBOL	REMARKS
1	LS0620001	1	JOINT COVER SUB ASSY, GRAY(1862), MFC9440CN		add
1	LS0621001	1	JOINT COVER SUB ASSY, GRAY(1862), DCP9040CN		add
2	LP2563001	1	PAPER CHUTE		
3	LP2564001	1	PAPER STOPPER, BLUE(6509)		
4	LP2565001	1	PAPER STOPPER GUIDE, BLUE(6509)		
~~5~~	~~LR1825001~~	~~1~~	~~STACK LEVER HOLDER L~~		del
~~6~~	~~LR1826001~~	~~1~~	~~STACK LEVER HOLDER R~~		del
~~7~~	~~LR1725001~~	~~2~~	~~PAPER STACK LEVER~~		del
8	LP2819001	1	TOP COVER USB FRONT, MFC9440CN		
8	LP2871001	1	TOP COVER USB FRONT, DCP9040CN		
9	LM9332001	1	USB HOST RELAY PCB ASSY, MFC9440CN	B512252	
10	LG7270001	1	SPEAKER ASSY		
11	~~LP2568001~~	~~1~~	~~SPEAKER HOLDER~~		del
12	LP2570001	1	JOINT SUB COVER, GRAY(1861)		
13	LG7149001	1	DRIVER PCB ASSY	B53K910	
14	LF6145001	1	PULL ARM L		
15	LF6146001	1	PULL ARM R		
16	LF6147001	2	PULL ARM GUIDE		
17	LF6148001	2	PULL ARM STOPPER		
18	LS0628001	1	PULL ARM SPRING L		chg
19	LS0895001	1	PULL ARM SPRING R		CHG
20	LP2624001	1	SIDE COVER L ASSY, GRAY(1862)		
21	LP2860001	1	SIDE COVER R ASSY, GRAY(1861)		
22	LR0516001	1	ACCESS COVER		
23	LR1361001	1	BACK COVER ASSY, GRAY(1862)		
24	LR0519001	1	BACK COVER UPPER		
25	UF5745000	1	MJ COVER EXT,MFC9440CN, FOR GER/UK/FRA/BEL/NLD/IRE/ITA/ZAF/PND		
26	LP2612001	2	CORD HOLDER, GRAY(1861), MFC9440CN		
~~27~~	~~085310816~~	~~2~~	~~TAPTITE BIND B M3X8~~		del
~~28~~	~~085411216~~	~~2~~	~~TAPTITE BIND B M4X12~~		del
29	087420816	8	TAPTITE CUP S M4X8		
30	087320616	9	TAPTITE CUP S M3X6		
31	087320816	6	TAPTITE CUP S M3X8		
32	087310816	2	TAPTITE CUP B M3X8		
33	087411216	5	TAPTITE CUP B M4X12		

www.drukparts.pl

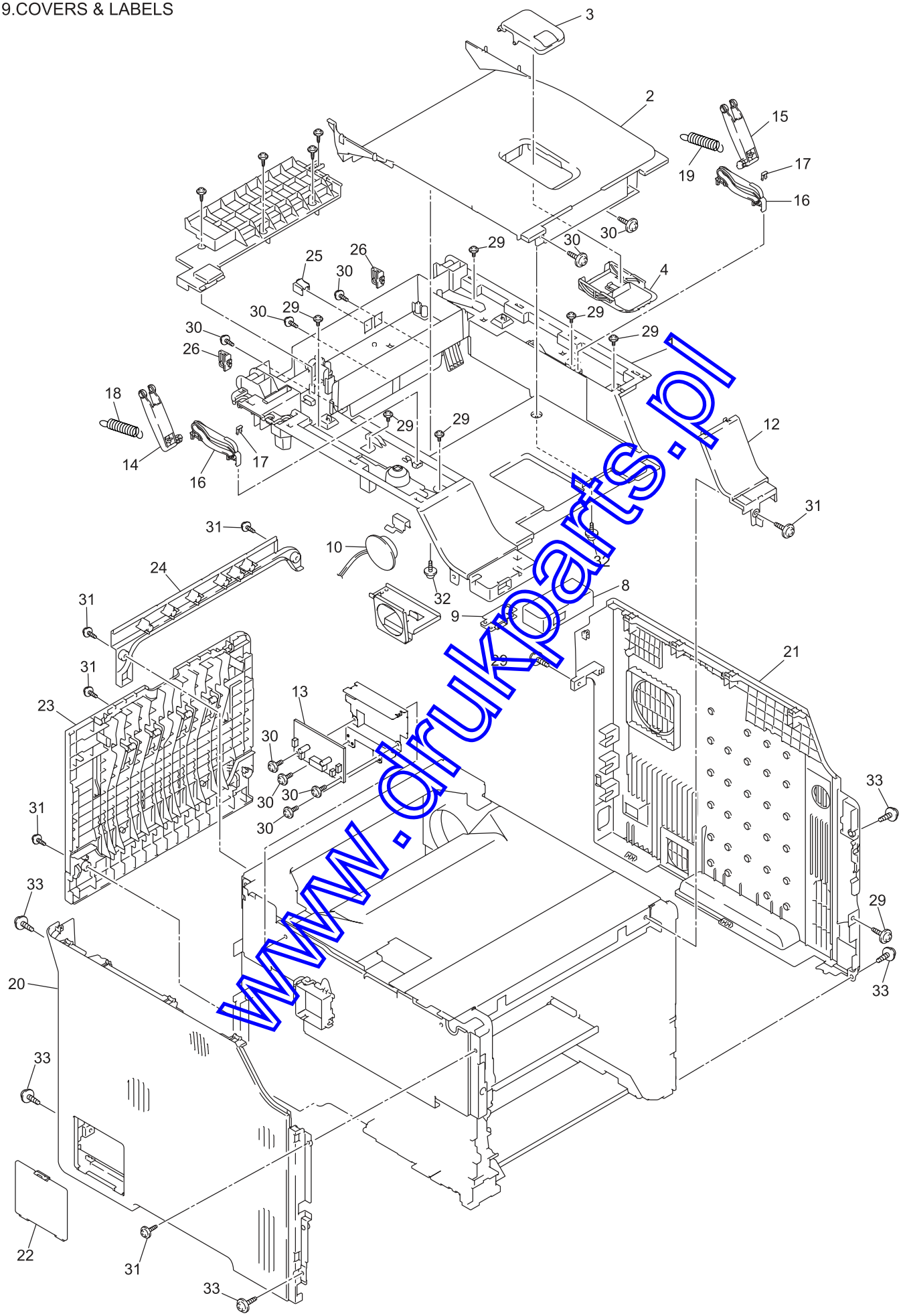

www.drukparts.pl

10.DOCUMENT SCANNER

REF No.	CODE	Q'TY	DESCRIPTION	SYMBOL	REMARKS
1	LP7105001	1	DOCUMENT SCANNER UNIT(SP)		

www.drukparts.pl

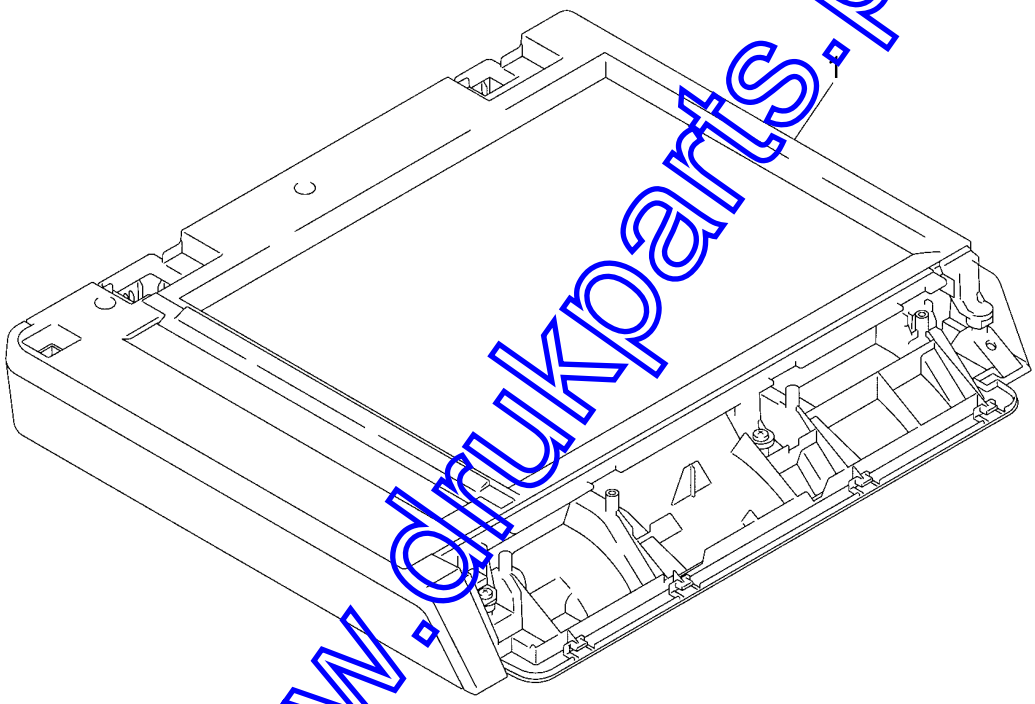

www.drukparts.pl

11.ADF

REF No.	CODE	Q'TY	DESCRIPTION	SYMBOL	REMARKS
1	LP7106001	1	ADF UNIT(SP)		
1-1	LP2583001	1	DOCUMENT COVER SUB ASSY, GRAY(1861)		
1-1-1	LP2588001	1	HINGE BASE R, GRAY(1861)		
1-1-2	LP2589001	1	DOCUMENT STOPPER, GRAY(1861)		
1-1-3	087311016	3	TAPTITE CUP B M3X10		
1-2	LF9080001	1	DRIVE FRAME ASSY		
1-2-1	LF9081001	1	ADF MOTOR		
1-2-2	085320616	1	TAPTITE BIND S M3X6		
1-3	LG7146001	1	ADF SENSOR PCB ASSY	B53K909	
1-4	LF6577001	1	EJECTION ROLLER ASSY		
1-5	LF6579001	1	LF ROLLER ASSY		
1-6	LP2591001	1	DOCUMENT HOLD ASSY		
1-7	LP2594001	1	DOCUMENT SPRING		
1-8	LF6865001	1	LOWER CHUTE FILM		
1-9	LP2595001	1	UPPER DOCUMENT CHUTE ASSY, GRAY(1862)		
1-9-1	LF7135001	1	SEPARATION RUBBER		
1-10	LP2601001	1	SEPARATE ROLLER SHAFT ASSY		
1-11	LP2603001	1	GEAR COVER,GRAY(1682)		
1-12	LP2604001	1	ADF COVER ASSY, GRAY(1862)		
1-13	LP2606001	1	ADF SIDE COVER, GRAY(1862)		
1-14	LP2607001	1	ADF FRONT COVER, GRAY(1862)		
1-15	087311016	13	TAPTITE CUP B M3X10		
1-16	087320616	1	TAPTITE CUP S M3X6		
2	LP2609001	1	HINGE ASSY L		
3	LE6244004	1	HINGE ARM R, GRAY(1861)		
4	LP2613001	1	ADF EMBLEM, MFC9440CN		
4	LP2680001	1	ADF EMBLEM, DCP9040CN		
5	087311016	3	TAPTITE CUP B M3X10		

www.drukparts.pl

11.ADF

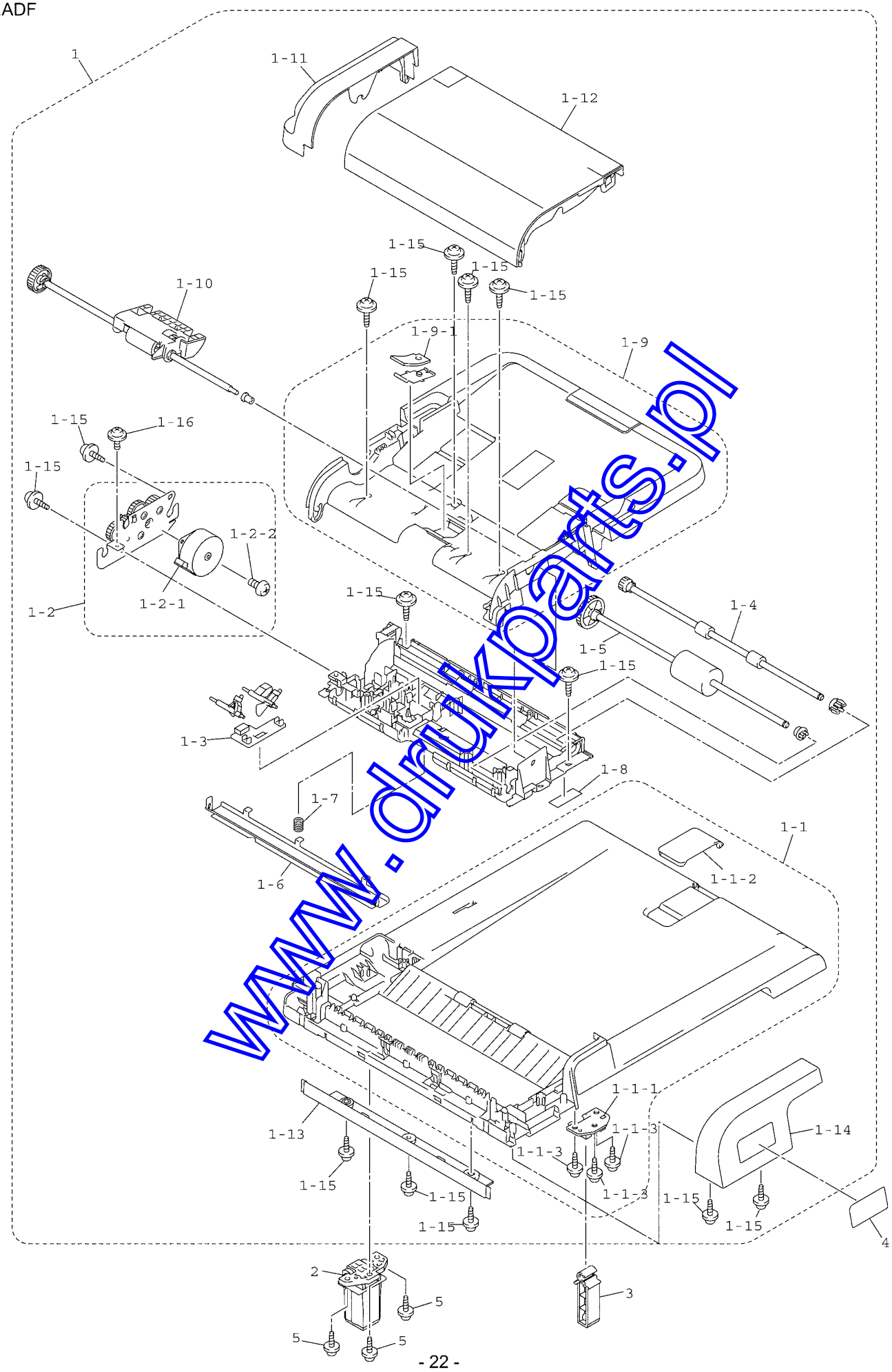

www.drukparts.pl

12. PANEL

REF No.	CODE	Q'TY	DESCRIPTION	SYMBOL	REMARKS
1	LP2614001	1	PANEL UNIT, MFC9440CN US/CAN/GER/UK/FRA/BEL /NLD/CHE/IRE/SPA/ITA/POR/CHN/ZAF/ASA/BRA/ARL/NZ/ PND		
1	LP2548001	1	PANEL UNIT, DCP9040CN FOR US/CAN		
1	LS0709001	1	PANEL UNIT, MFC9440CN FOR RUS/EEU		
1	LP7157001	1	PANEL UNIT, DCP9040CN FOR GER/UK/FRA/BEL/NLD /CHE/SPA/ITA/POR/CHN/ASA/RUS/PND/EEU		
1-1	LP2615001	1	PANEL COVER, GRAY(1861), MFC9440CN		
1-1	LP2549001	1	PANEL COVER, GRAY(1861), DCP9040CN		
1-2	LP2550001	1	RUBBER KEY R, MFC9440CN		
1-2	LP2552001	1	RUBBER KEY R, DCP9040CN		
1-3	LP2628001	1	RUBBER KEY C, MFC9440CN		
1-3	LP2690001	1	RUBBER KEY C, DCP9040CN		
1-4	LP2630001	1	RUBBER KEY L, MFC9440CN		
1-4	LP2554001	1	RUBBER KEY L, DCP9040CN		
1-5	LG7154001	1	PANEL PCB ASSY, MFC9440CN	B53K908	
1-5	LG7245001	1	PANEL PCB ASSY, DCP9040CN	B53K915	
1-6	LG6275001	1	LCD, MFC9440CN FOR US/CAN/GER/UK/FRA/BEL/NLD/ CHE/IRE/SPA/ITA/POR/CHN/ZAF/ASA/BRA/ARL/NZ/ PND, DCP9040CN FOR US/CAN		
1-6	LG7451001	1	LCD, MFC9440CN FOR RUS/EEU, DCP9040CN FOR GER/UK/FRA/BEL/NLD/CHE/SPA/ITA/POR/CHN/ASA/RUS/ PND/EEU		
1-7	LG6257001	1	BACK LIGHT MODULE		
1-8	LP7001001	1	PANEL INSULATION SHEET		
1-9	LP7085001	1	PANEL INSULATION SHEET L, MFC9440CN		
1-9	LP7087001	1	PANEL INSULATION SHEET L, DCP9040CN		
1-10	LP7086001	1	PANEL INSULATION SHEET R, MFC9440CN		
1-10	LP7088001	1	PANEL INSULATION SHEET R, DCP9040CN		
2	LP2616001	1	PRINTED PANEL COVER, MFC9440CN FOR US/CAN		
2	LP2557001	1	PRINTED PANEL COVER, DCP9040CN FOR US/CAN		
2	LP7161001	1	PRINTED PANEL COVER, MFC9440CN FOR GER/CHE/ EEU <GERMAN>		
2	LS0673001	1	PRINTED PANEL COVER, DCP9040CN FOR GER/CHE/ EEU<GERMAN>		
2	LP7051001	1	PRINTED PANEL COVER, MFC9440CN FOR UK/IRE/ FRA/BEL/NLD/ZAF/EEU<ENGLISH>		
2	LP7149001	1	PRINTED PANEL COVER, DCP9040CN FOR UK/FRA/ BEL/NLD/ASA/EEU <ENGLISH>		
2	LP7052001	1	PRINTED PANEL COVER, MFC9440CN FOR FRA/BEL/ NLD/CHE<FRENCH>		
2	LP7150001	1	PRINTED PANEL COVER, DCP9040CN FOR FRA/BEL/ NLD/CHE <FRENCH>		
2	LP7053001	1	PRINTED PANEL COVER, MFC9440CN FOR FRA/BEL/ NLD<DUTCH>		
2	LP7151001	1	PRINTED PANEL COVER, DCP9040CN FOR FRA/BEL/ NLD <DUTCH>		
2	LP7040001	1	PRINTED PANEL COVER, MFC9440CN FOR SPA/POR <SPANISH>		
2	LP7141001	1	PRINTED PANEL COVER, DCP9040CN FOR SPA/POR <SPANISH>		
2	LP7044001	1	PRINTED PANEL COVER, MFC9440CN FOR SPA/POR <PORTUGUESE>		
2	LP7143001	1	PRINTED PANEL COVER, DCP9040CN FOR SPA/POR <PORTUGUESE>		
2	LP7047001	1	PRINTED PANEL COVER, MFC9440CN FOR ITA		
2	LP7147001	1	PRINTED PANEL COVER, DCP9040CN FOR ITA		

www.drukoats.pl

12. PANEL

REF No.	CODE	Q'TY	DESCRIPTION	SYMBOL	REMARKS
2	LS0530001	1	PRINTED PANEL COVER, MFC9440CN FOR CHN		
2	LS0524001	1	PRINTED PANEL COVER, DCP9040CN FOR CHN		
2	LP7167001	1	PRINTED PANEL COVER, MFC9440CN FOR ASA/ARL/NZ		
2	LS0526001	1	PRINTED PANEL COVER, MFC9440CN FOR BRA		
2	LS0528001	1	PRINTED PANEL COVER, MFC9440CN FOR RUS		
2	LS0523001	1	PRINTED PANEL COVER, DCP9040CN FOR RUS		
2	LP7173001	1	PRINTED PANEL COVER, MFC9440CN FOR PND		
2	LS0522001	1	PRINTED PANEL COVER, DCP9040CN FOR PND		
2-1	LP2621001	1	ADDRESS LABEL, MFC9440CN		
3	087311016	5	TAPTITE CUP B M3X10		

www.drukparts.pl

12.PANEL

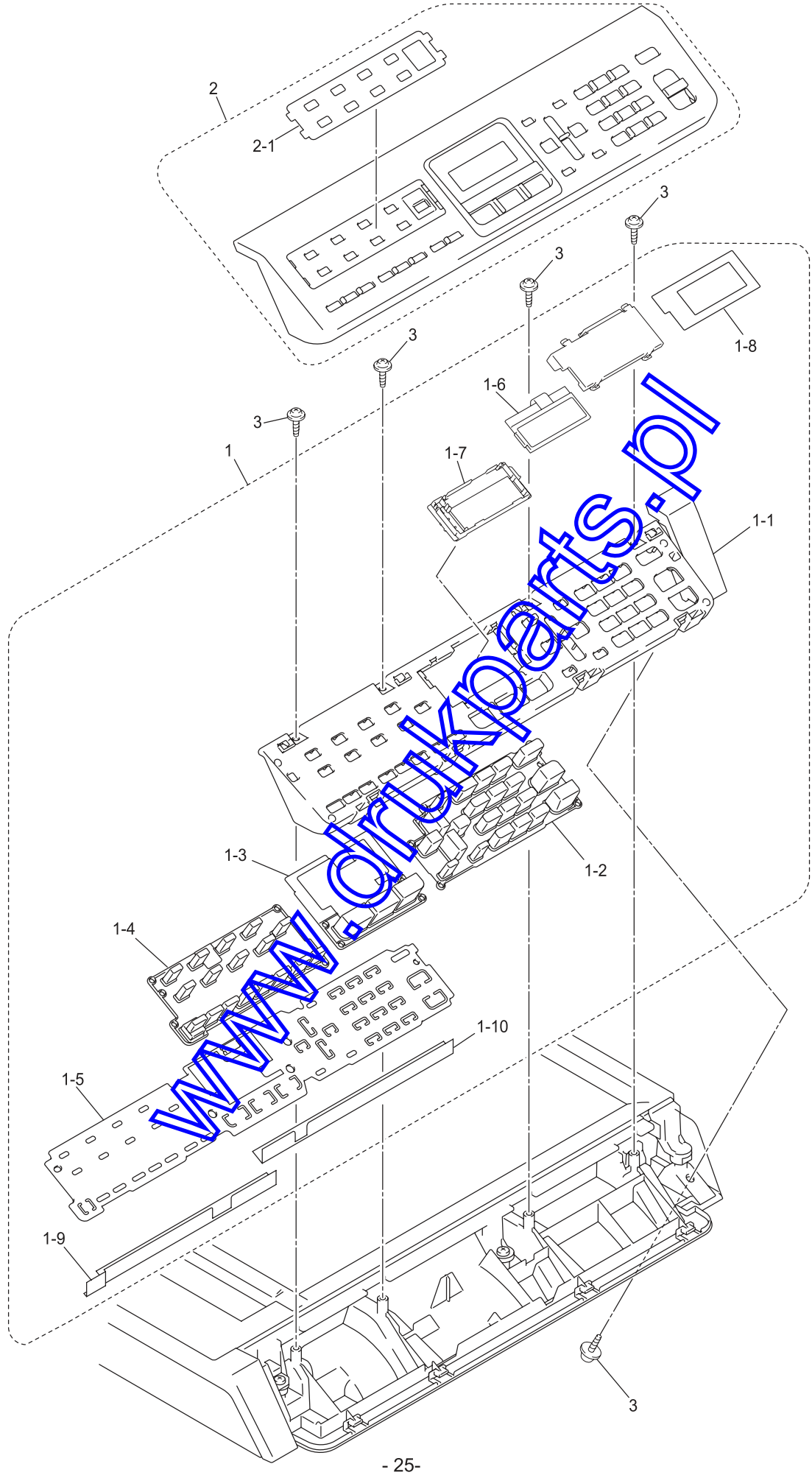

www.drukparts.pl

13. PCB

REF No.	CODE	Q'TY	DESCRIPTION	SYMBOL	REMARKS
1	LG7167001	1	MAIN PCB ASSY, MFC9440CN FOR US/CAN	B53K875	
1	LG7167004	1	MAIN PCB ASSY, MFC9440CN FOR GER/UK/FRA/BEL/ NLD/CHE/IRE/SPA/ITA/POR/CHN/ZAF/ASA/BRA/RUS/ARL/ NZ/PND/EEU	B53K875	
1	LG7156001	1	MAIN PCB ASSY, DCP9040CN FOR US/CAN/GER/UK/ FRA/BEL/NLD/CHE/SPA/ITA/POR/CHN/ASA/RUS/PND/ EEU	B53K875	
2	LG5921001	1	BATTERY ASSY		
3	LM9175001	1	ENGINE PCB ASSY	B512250	
4	LG5925001	1	NCU PCB ASSY, MFC9440CN FOR US	B53K784	
4	LG5925002	1	NCU PCB ASSY, MFC9440CN FOR CAN	B53K784	
4	LG5923054	1	NCU PCB ASSY, MFC9440CN FOR GER	B53K786	
4	LG5923065	1	NCU PCB ASSY, MFC9440CN FOR UK/FRA/BEL/NLD/ IRE/SPA/ITA/POR/RUS/PND/EEU	B53K786	
4	LG5923056	1	NCU PCB ASSY, MFC9440CN FOR CHE	B53K786	
4	LG6872001	1	NCU PCB ASSY, MFC9440CN FOR ZAF	B53K896	
4	LG6190005	1	NCU PCB ASSY, MFC9440CN FOR CHN/ASA	B53K786	
4	LG6190006	1	NCU PCB ASSY, MFC9440CN FOR BRA	B53K786	
4	LG6198003	1	NCU PCB ASSY, MFC9440CN FOR ARL/NZ	B53K786	
5	LM9246001	1	PS PCB UNIT 115V FOR US/CAN/BRA		
5	LM9287001	1	PS PCB UNIT AC 230V FOR GER/UK/FRA/BEL/NLD/ CHE/IRE/SPA/ITA/POR/ZAF/ASA/ARL/NZ/PND/EEU		
5	LG7446001	1	PS PCB UNIT 230V, MFC9440CN FOR ASA		
5	LG7444001	1	PS PCB UNIT 230V, MFC9440CN FOR CHN/RUS		
5	LM9503001	1	PS PCB UNIT 230V, DCP9040CN FOR CHN/RUS		
6	LM9506001	1	CHARGE HVPS PCB ASSY		
7	LR0902001	1	TRANSFER HVPS PCB UNIT		
7-1	LM9253001	1	TRANSFER HVPS PCB ASSY		
7-2	LM9224001	1	DENSITY SENSOR		
7-3	LM9446001	1	REGISTRATION-MARK SENSOR PCB ASSY1		
7-4	LM9448001	1	REGISTRATION-MARK SENSOR PCB ASSY2		
7-5	LM9445001	1	REGISTRATION RELAY PCB ASSY		
7-6	085310816	6	TAPTITE BIND B M3X8		
7-7	087311016	5	TAPTITE CUP B M3X10		

www.drukparts.pl

13.PCB

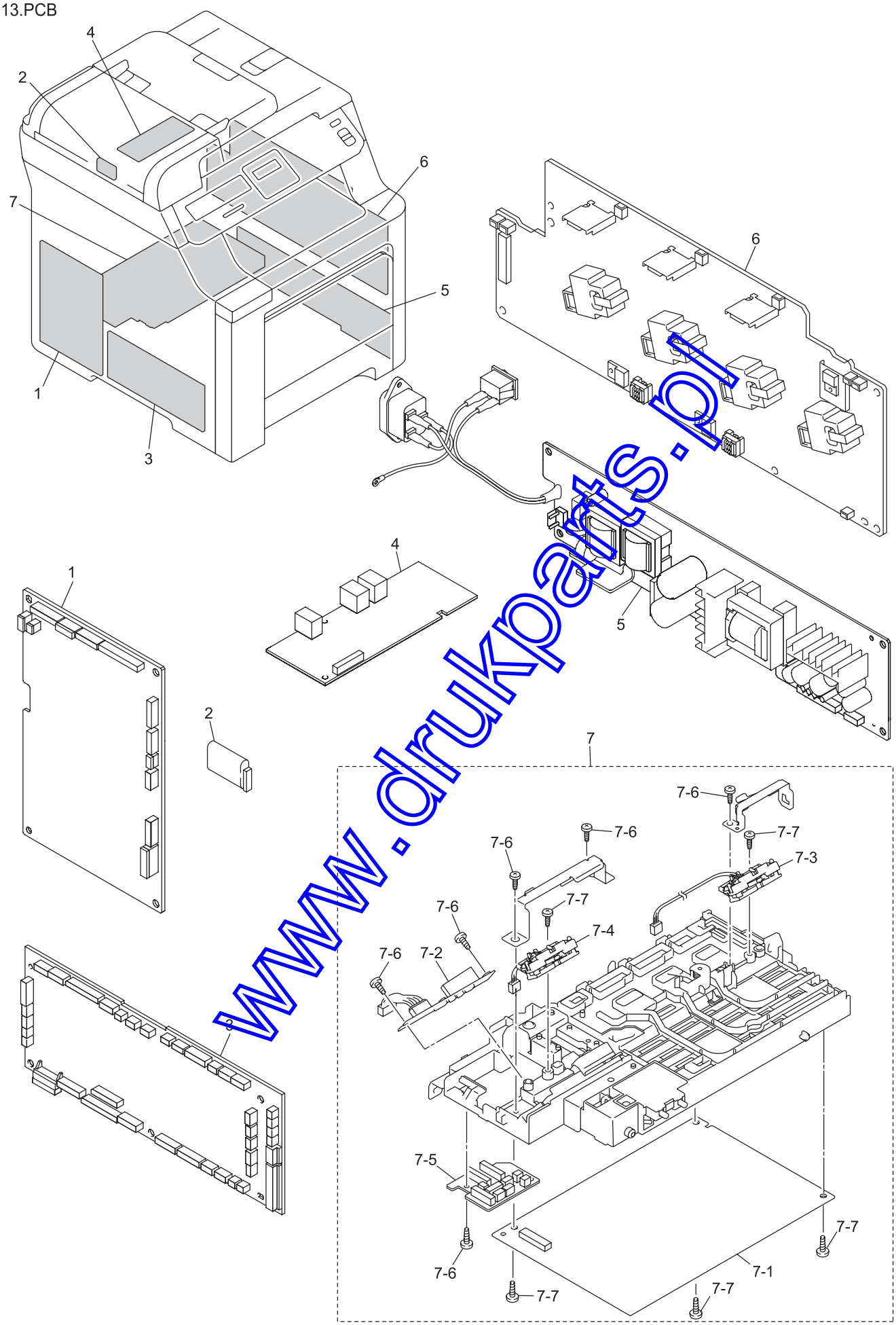

www.drukparts.pl

14. ACCESSORIES

REF No.	CODE	Q'TY	DESCRIPTION	REMARKS
1	LP2954001	1	CD ROM ASSY (Windows), MFC9440CN FOR US/CAN	
1	LP2955001	1	CD ROM ASSY (Windows), DCP9040CN FOR US/CAN	
1	LP2958001	1	CD ROM ASSY (Macintosh), MFC9440CN/DCP9040CN FOR US/CAN	chg
~~1~~	~~LP2982001~~	~~1~~	~~CD ROM ASSY (Macintosh), DCP9040CN FOR US~~	del
1	LP7018001	1	CD ROM ASSY (Windows), MFC9440CN FOR GER/UK/CHE/IRE/ ZAF/ASA/ARL/NZ/EEU	
1	LP7115001	1	CD ROM ASSY (Windows), DCP9040CN FOR GER/UK/CHE/ASA /EEU	
1	LP7025001	1	CD ROM ASSY (Macintosh), MFC9440CN FOR GER/UK/FRA/BEL/ NLD/CHE/IRE/SPA/ITA/POR/ZAF/ASA/ARL/NZ/PND	chg
1	LP7123001	1	CD ROM ASSY (Macintosh), DCP9040CN FOR GER/UK/FRA/BEL /NLD/CHE/SPA/ITA/POR/ASA/RUS/PND/EEU	chg
1	LP7020001	1	CD ROM ASSY (Windows), MFC9440CN FOR FRA/BEL/NLD	
1	LP7117001	1	CD ROM ASSY (Windows), DCP9040CN FOR FRA/BEL/NLD	
1	LP7019001	1	CD ROM ASSY (Windows), MFC9440CN FOR SPA/ITA/POR/BRA	
1	LP7116001	1	CD ROM ASSY (Windows), DCP9040CN FOR SPA/ITA/POR	
1	LS0857001	1	CD ROM ASSY (Windows), MFC9440CN FOR CHN	
1	LS0856001	1	CD ROM ASSY (Windows), DCP9040CN FOR CHN	
1	LS0859001	1	CD ROM ASSY (Macintosh), MFC9440CN/DCP9040CN FOR CHN	
1	LP7023001	1	CD ROM ASSY (Windows), MFC9440CN FOR RUS	
1	LP7120001	1	CD ROM ASSY (Windows), DCP9040CN FOR RUS	
1	LP7026001	1	CD ROM ASSY (Macintosh), MFC9440CN FOR BRA/RUS/EEU	
~~1~~	~~LP7123001~~	~~1~~	~~CD ROM ASSY (Macintosh), DCP9040CN FOR RUS/EEU~~	del
1	LP7021001	1	CD ROM ASSY (Windows), MFC9440CN FOR PND	
1	LP7118001	1	CD ROM ASSY (Windows), DCP9040CN FOR PND	
~~1~~	~~LP7122001~~	~~1~~	~~CD ROM ASSY (Macintosh), DCP9040CN FOR PND~~	del
1	LP7022001	1	CD ROM ASSY (Windows), MFC9440CN FOR EEU	add
2	LP2997001	1	OUTPUT TRAY ATTACHMENT ASSY	
3	LM9362001	1	AC CORD BAG ASSY FOR US/CAN	
3	LG4424001	1	AC CORD BAG ASSY VDE FOR GER/FRA/BEL/NLD/SPA/ITA/POR/ ASA/RUS/PND/EEU	
3	LG6208001	1	AC CORD BAG ASSY BS FOR UK/IRE/ASA	
3	LG4718001	1	AC CORD BAG ASSY SEV FOR CHE	
3	LJ9353001	1	AC CORD BAG ASSY CHN FOR CHN	
3	LG6404001	1	AC CORD BAG ASSY SAF FOR ZAF	
3	LJ9667001	1	AC CORD BAG ASSY SAA FOR ASA/ARL/NZ	
3	LM9513001	1	AC CORD BAG ASSY LF BRZ FOR BRA	
3	LG4720001	1	AC CORD BAG ASSY DEMCO FOR PND	
4	LG3509001	1	TELEPHONE PLUG, MFC9440CN FOR ARL/NZ	
5	LG3077001	1	TELEPHONE LINE CORD CSA, MFC9440CN FOR US/CAN/UK/ FRA/BEL/NLD/IRE/SPA/POR/CHN/ZAF/ASA/BRA/RUS/ARL/NZ/EEU	
5	UG3625001	1	TELEPHONE LINE CORD GER, MFC9440CN FOR GER	
5	UG4205001	1	TELEPHONE LINE CORD AUS, MFC9440CN FOR GER/EEU	
5	UG3626001	1	TELEPHONE LINE CORD UK6P, MFC9440CN FOR UK/IRE	
5	UG3627001	1	TELEPHONE LINE CORD FRA, MFC9440CN FOR FRA/BEL/NLD	
5	UG1575001	1	TELEPHONE LINE CORD BEL, MFC9440CN FOR FRA/BEL/NLD	
5	UG3290001	1	TELEPHONE LINE CORD, MFC9440CN FOR ARL/NZ	
5	LG7202001	1	TELEPHONE LINE CORD SWI, MFC9440CN FOR CHE	
5	UG3634001	1	TELEPHONE LINE CORD ITA, MFC9440CN FOR ITA	
5	LG5827001	1	TELEPHONE LINE CORD RJ45, MFC9440CN FOR PND	
6	LR1712001	1	WASTER TONER BOX REPACKING BAG	
7	LR1892001	1	DRUM CLEANING SHEET KIT	
8	UG1573000	1	TELEPHONE PLUG BEL, MFC9440CN FOR FRA/BEL/NLD	

www.druk-parts.pl

14. ACCESSORIES

REF No.	CODE	Q'TY	DESCRIPTION	REMARKS
9	LG3622001	1	TELEPHONE PLUG DUT, MFC9440CN FOR FRA/BEL/NLD	
10	LG5829001	1	TELEPHONE PLUG FIN, MFC9440CN FOR PND	
11	LG5828001	1	TELEPHONE PLUG DEN, MFC9440CN FOR PND	
12	LG5830001	1	TELEPHONE PLUG SWE, MFC9440CN FOR PND	
13	LR0094001	1	TONER CARTRIDGE PROTECTIVE COVER	add
14	LU4055001	1	DRUM UNIT REMOVE SHEET	add

www.drukparts.pl

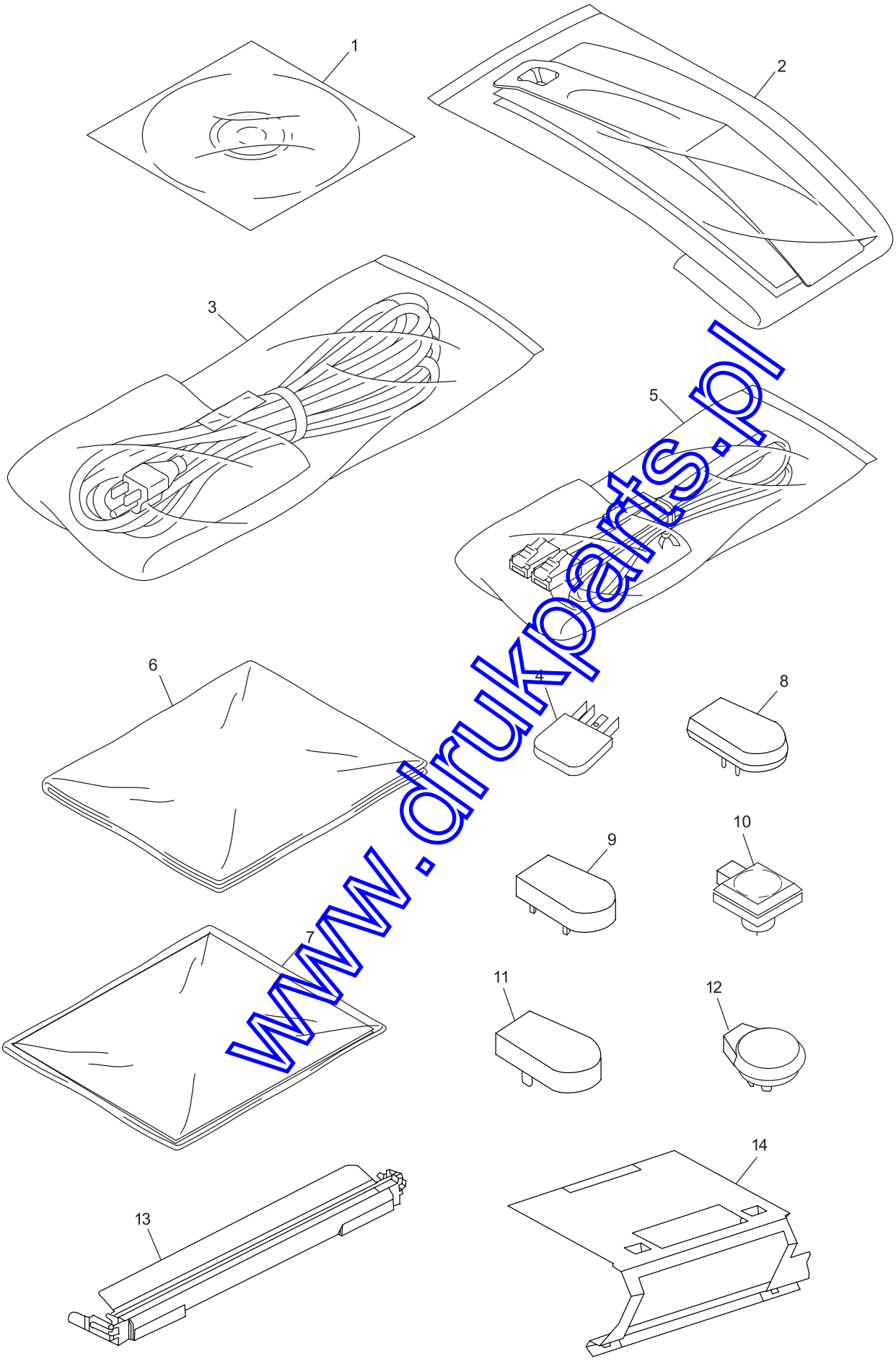

www.drukparts.pl

15.PRINTED MATERIAL

REF No.	CODE	Q'TY	DESCRIPTION	REMARKS
1	LP2984001	1	USER'S GUIDE, MFC9440CN FOR US/CAN <ENGLISH>	
1	LP2969001	1	USER'S GUIDE, DCP9040CN FOR US/CAN <ENGLISH>	
1	LP2984002	1	USER'S GUIDE, MFC9440CN FOR CAN <FRENCH>	
1	LP2969002	1	USER'S GUIDE, DCP9040CN FOR CAN <FRENCH>	
1	LP7028003	1	USER'S GUIDE, MFC9440CN FOR GER/CHE <GERMAN>	
1	LP7028004	1	USER'S GUIDE, MFC9440CN FOR UK/IRE/ZAF <ENGLISH>	
1	LP7028005	1	USER'S GUIDE, MFC9440CN FOR FRA/BEL/NLD/CHE <FRENCH>	
1	LP7028009	1	USER'S GUIDE, MFC9440CN FOR FRA/BEL/NLD <DUTCH>	
1	LP7028015	1	USER'S GUIDE, MFC9440CN FOR SPA/POR <SPANISH>	
1	LP7028018	1	USER'S GUIDE, MFC9440CN FOR SPA/POR <PORTUGUESE>	
1	LP7028016	1	USER'S GUIDE, MFC9440CN FOR ITA <ITALIAN>	
1	LP7028020	1	USER'S GUIDE, MFC9440CN FOR CHN <CHINESE>	
1	LS0671020	1	USER'S GUIDE, DCP9040CN FOR CHN <CHINESE>	
1	LP7028040	1	USER'S GUIDE, MFC9440CN FOR ASA/ARL/NZ <ENGLISH>	
1	LS0671040	1	USER'S GUIDE, DCP9040CN FOR ASA <ENGLISH>	
1	LP7028042	1	USER'S GUIDE, MFC9440CN FOR BRA	
1	LP7028048	1	USER'S GUIDE, MFC9440CN FOR RUS <RUSSIAN>	
1	LP7177007	1	USER'S GUIDE, MFC9440CN FOR PND <NORWEGIAN, SWEDISH>	
1	LP7178013	1	USER'S GUIDE, MFC9440CN FOR PND <DANISH, FINNISH>	
2	LP2996001	1	FRENCH SHEET, MFC9440CN FOR CAN	

www.drukparts.pl

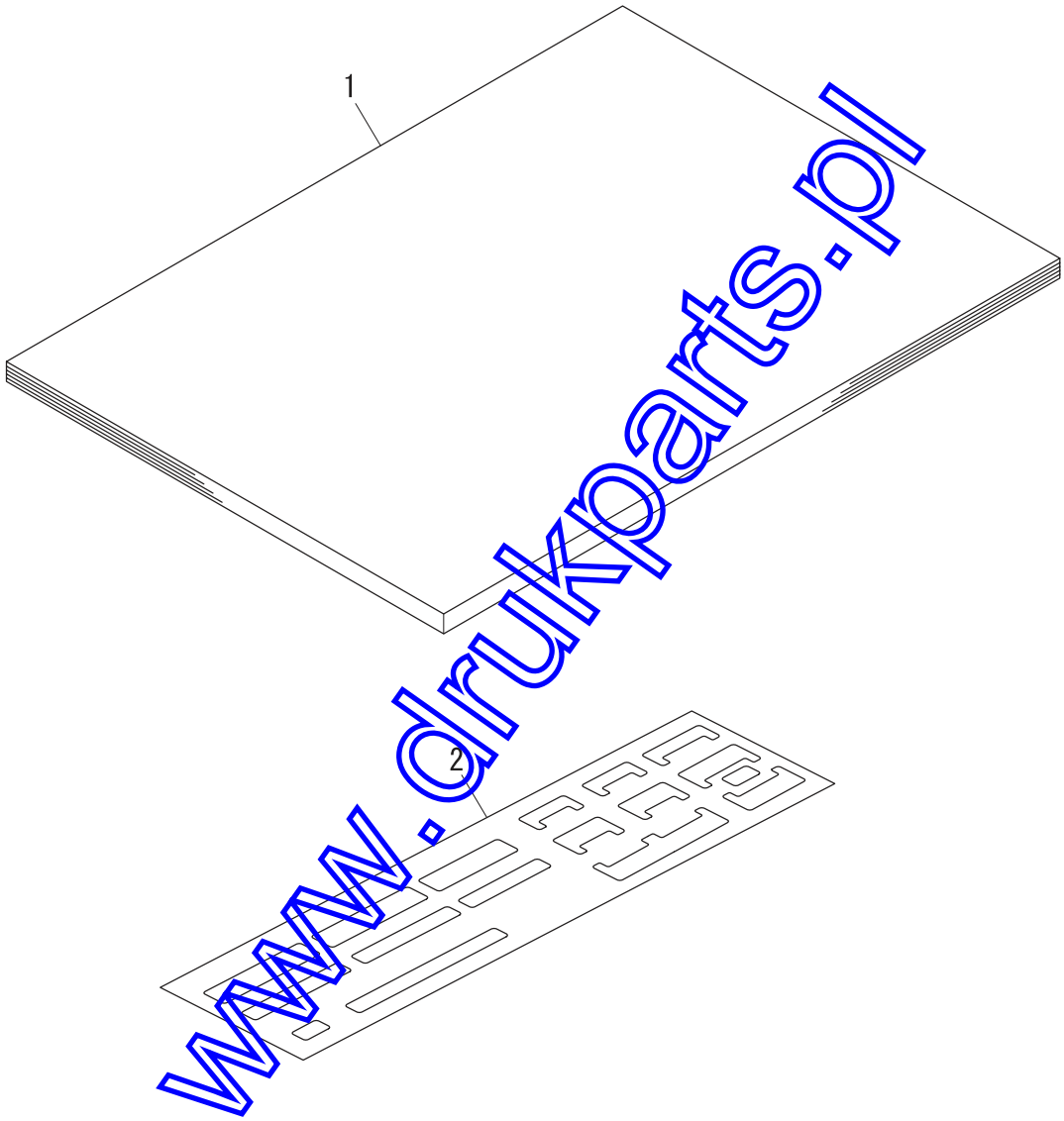

www.drukparts.pl

16. PACKING MATERIALS

REF No.	CODE	Q'TY	DESCRIPTION	REMARKS
1	LP2891001	1	CARTON BOTTOM	
2	LP2985001	1	CARTON BROTHER, MFC9440CN FOR US/BRA	
2	LP2973001	1	CARTON BROTHER, DCP9040CN FOR US	
2	LP7063001	1	CARTON BROTHER, MFC9440CN FOR CAN	
2	LS0896001	1	CARTON BROTHER, DCP9040CN FOR CAN	
2	LP7029001	1	CARTON BROTHER, MFC9440CN FOR GER/UK/FRA/BEL/NLD/ CHE/IRE/SPA/ITA/POR/ZAF/RUS/PND/EEU	
2	LP7125001	1	CARTON BROTHER, DCP9040CN FOR GER/UK/FRA/BEL/NLD/ CHE/SPA/ITA/POR/RUS/PND/EEU	
2	LS0854001	1	CARTON BROTHER, MFC9440CN FOR CHN	
2	LS0853001	1	CARTON BROTHER, DCP9040CN FOR CHN	
2	LP7169001	1	CARTON BROTHER, MFC9440CN FOR ASA/ARL/NZ	
2	LS0680001	1	CARTON BROTHER, DCP9040CN FOR ASA	
3	LP2892001	1	POLYSTYLENE PAD ASSY	
4	LP2897001	1	OPTION CARTON	
5	LP2898001	1	OPTION PAD L	
6	LP2899001	1	OPTION PAD R	
7	LP2900001	1	CARTON CORD BOX	
8	LP7093001	1	CARTON PAD	
9	LP2832001	4	CARTON JOINT	
10	UE1688001	1	PE BAG 1000X1000H	
11	LR1705001	4	TONER REPACKING BAG	
12	LP2988001	1	QUICK SETUP GUIDE, MFC9440CN FOR US/CAN <ENGLISH>	
12	LP2976001	1	QUICK SETUP GUIDE, DCP9040CN FOR US/CAN <ENGLISH>	
12	LP2988002	1	QUICK SETUP GUIDE, MFC9440CN FOR CAN <FRENCH>	
12	LP2976002	1	QUICK SETUP GUIDE, DCP9040CN FOR CAN <FRENCH>	
12	LP7037003	1	QUICK SETUP GUIDE, MFC9440CN FOR GER/CHE/EEU <GERMAN>	
12	LP7129003	1	QUICK SETUP GUIDE, DCP9040CN FOR GER/CHE/EEU <GERMAN>	
12	LP7037004	1	QUICK SETUP GUIDE, MFC9440CN FOR UK/IRE/ZAF <ENGLISH>	
12	LP7129004	1	QUICK SETUP GUIDE, DCP9040CN FOR UK <ENGLISH>	
12	LP7037005	1	QUICK SETUP GUIDE, MFC9440CN FOR FRA/BEL/NLD/CHE <FRENCH>	
12	LP7129005	1	QUICK SETUP GUIDE, DCP9040CN FOR FRA/BEL/NLD/CHE <FRENCH>	
12	LP7037009	1	QUICK SETUP GUIDE, MFC9440CN FOR FRA/BEL/NLD<DUTCH>	
12	LP7129009	1	QUICK SETUP GUIDE, DCP9040CN FOR FRA/BEL/NLD<DUTCH>	
12	LP7037015	1	QUICK SETUP GUIDE, MFC9440CN FOR SPA/POR <SPANISH>	
12	LP7129015	1	QUICK SETUP GUIDE, DCP9040CN FOR SPA/POR <SPANISH>	
12	LP7037018	1	QUICK SETUP GUIDE, MFC9440CN FOR SPA/POR <PORTUGUESE>	
12	LP7129018	1	QUICK SETUP GUIDE, DCP9040CN FOR SPA/POR <PORTUGUESE>	
12	LP7037016	1	QUICK SETUP GUIDE, MFC9440CN FOR ITA <ITALIAN>	
12	LP7129016	1	QUICK SETUP GUIDE, DCP9040CN FOR ITA <ITALIAN>	
12	LP7037020	1	QUICK SETUP GUIDE, MFC9440CN FOR CHN <CHINESE>	
12	LP7129020	1	QUICK SETUP GUIDE, DCP9040CN FOR CHN <CHINESE>	
12	LP7037040	1	QUICK SETUP GUIDE, MFC9440CN FOR ASA/ARL/NZ <ENGLISH>	
12	LP7129040	1	QUICK SETUP GUIDE, DCP9040CN FOR ASA <ENGLISH>	
12	LP7037042	1	QUICK SETUP GUIDE, MFC9440CN FOR BRA	
12	LP7037048	1	QUICK SETUP GUIDE, MFC9440CN FOR RUS <RUSSIAN>	
12	LP7129048	1	QUICK SETUP GUIDE, DCP9040CN FOR RUS <RUSSIAN>	
12	LP7037007	1	QUICK SETUP GUIDE, MFC9440CN FOR PND <NORWEGIAN>	

www.drukparts.pl

16. PACKING MATERIALS

REF No.	CODE	Q'TY	DESCRIPTION	REMARKS
12	LP7129007	1	QUICK SETUP GUIDE, DCP9040CN FOR PND <NORWEGIAN>	
12	LP7037012	1	QUICK SETUP GUIDE, MFC9440CN FOR PND <FINNISH>	
12	LP7129012	1	QUICK SETUP GUIDE, DCP9040CN FOR PND <FINNISH>	
12	LP7037013	1	QUICK SETUP GUIDE, MFC9440CN FOR PND <DANISH>	
12	LP7129013	1	QUICK SETUP GUIDE, DCP9040CN FOR PND <DANISH>	
12	LP7037026	1	QUICK SETUP GUIDE, MFC9440CN FOR PND <SWEDISH>	
12	LP7129026	1	QUICK SETUP GUIDE, DCP9040CN FOR PND <SWEDISH>	
12	LP7037039	1	QUICK SETUP GUIDE, MFC9440CN FOR EEU <ENGLISH/ ROMANIAN/BULGARIAN/SLOVAK>	add
12	LP7037037	1	QUICK SETUP GUIDE, MFC9440CN FOR EEU <CZECH/ HUNGARIAN/POLISH>	add
13	LR1345001	1	BELT LOCK L	
14	LR1346001	1	BELT LOCK R	
15	LR1332001	1	DRUM STOPPER L	
16	LR1333001	1	DRUM STOPPER R	

www.drukparts.pl

16.PACKING MATEIRALS

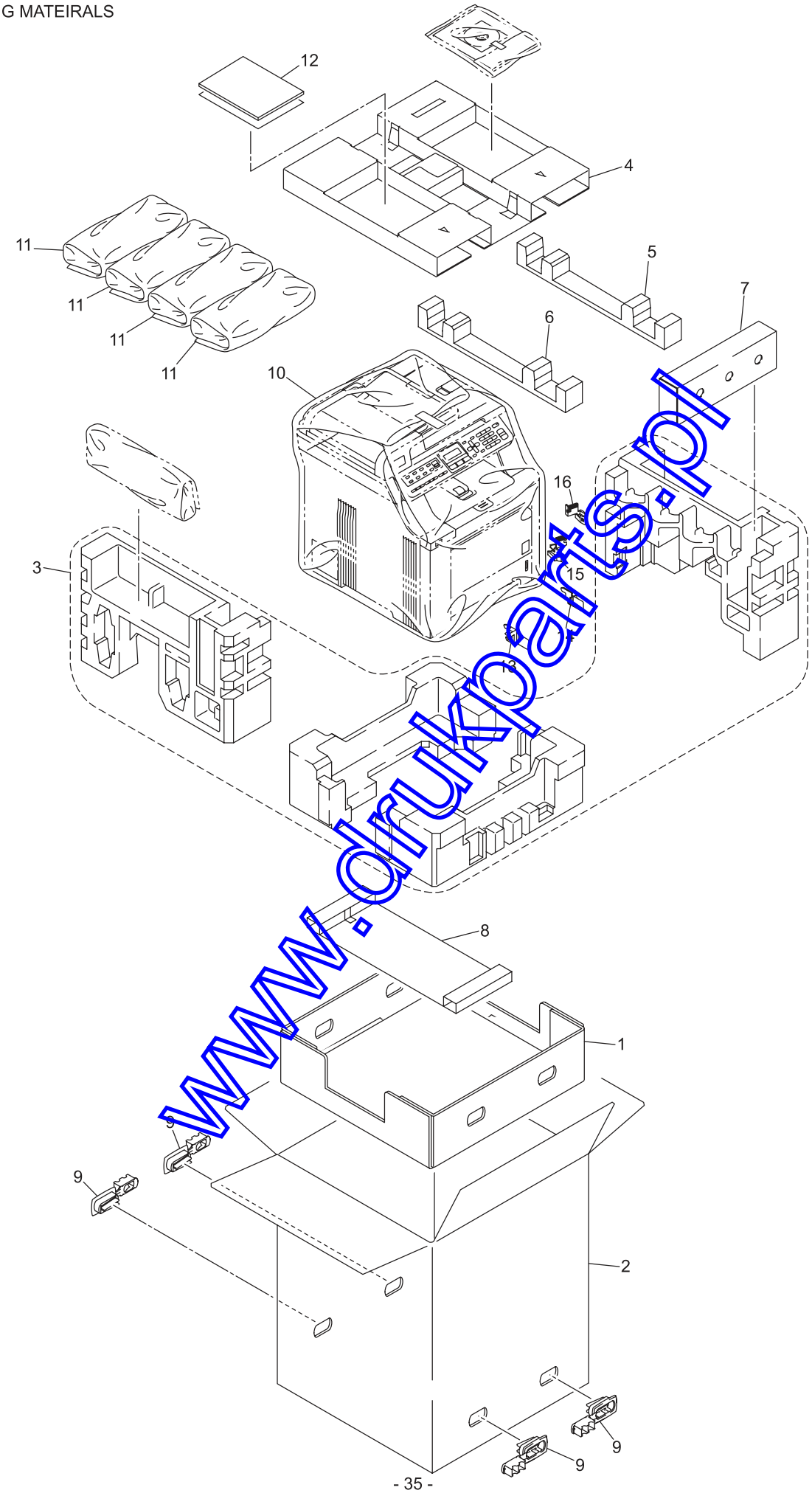

www.drukparts.pl

17. PERIODICAL MAINTENANCE PART

REF No.	CODE	Q'TY	DESCRIPTION	REMARKS
1	LR1919001	1	PAPER FEED KIT	
2	LR1920001	1	MP PAPER FEED KIT	

www.drukparts.pl

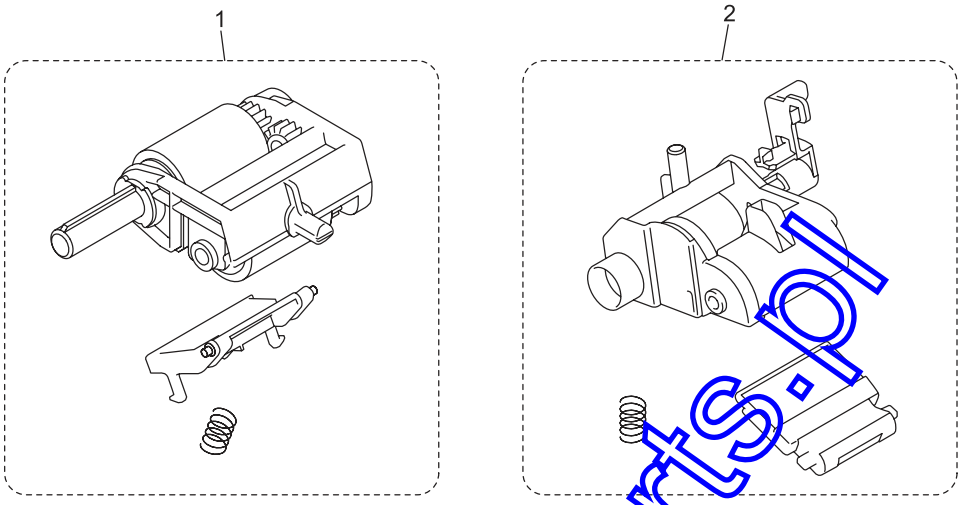

www.drukparts.pl