brother®

FACSIMILE EQUIPMENT

PARTS REFERENCE LIST

MODEL: DCP8040 / 8045D/8045DN
MFC8440 / 8840D / 8840DN

(For Germany / United Kingdom / France / Belgium / Netherlands / Switzerland / Ireland / Denmark / Austria / Spain / Italy / Portugal / Asia / China Oceania (Austria/ New Zealand) / Pan-Nordic (Norway / Finland / Sweden) / Euro Generic)

www.drukparts.pl

www.drukparts.pl

© Copyright Brother 2004
All rights reserved
No part of this publication may be reproduced in any form or by any means without permission in writing from the publisher.
Specifications are subject to change without prior notice.

NOTES FOR USING THIS PARTS REFERENCE LIST

1. In the case of ordering parts, it needs mentioning the following items:
   (1) Code
   (2) Q' ty
   (3) Description
   (4) Recommend (The √ mark is attached to recommend parts at this column.)
   (5) Symbol (PCB No., Revision, and Parts location mounted on the PCB.)

   Note: No orders without Parts Code or Tool No. can be accepted.

[Example]

	(1)	(2)	(3)	(4)	(5)	
REF.NO.	CODE	Q' TY	DESCRIPTION	RECOMMEND	SYMBOL	REMARKS

2. Design-changed parts:
   When the parts are changed, any one of the following symbols is mentioned in the REMARKS column.
   CHG (chg): The part is changed to a new part.
   ADD (add): The part is newly added.
   DEL (del): The part is deleted.
   Symbol in capital letters indicates that the change is the latest one in the page.

3. Parts change will be informed by the technical information.

COUNTRIES

GERMAN ----- GER
UNITED KINGDOM ----- UK
FRANCE ---- FRA
BELGIUM ---- BEL
NETHERLANDS ---- NLD
SWITZERLAND ---- CHE
IRELAND ---- IRE
DENMARK ---- DEN
AUSTRIA ---- AUS
SPAIN ---- SPA
ITALY ---- ITA
PORTUGAL ---- POR
CHINA ---- CHN
ASIA ---- ASA
OCEANIA ---- OCE
PAN NORDIC ---- PND
EURO GENERIC ---- GNR

www.drukparts.pl

1. FRAME L

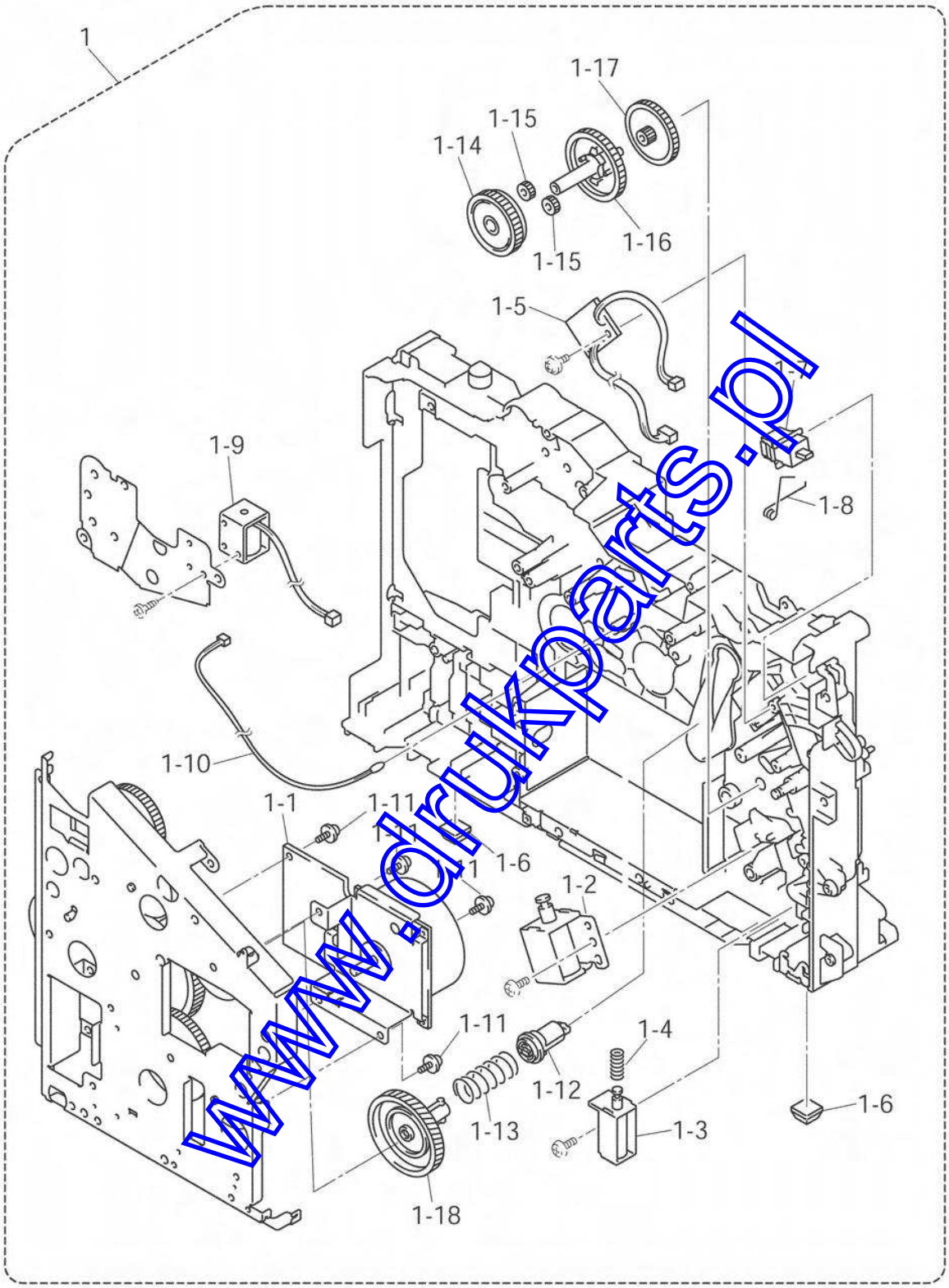

www.drukparts.pl

LIST1(FRAME L)

REF No.	CODE	Q'TY	DESCRIPTION	RECOMMEND	ORDER TO BIUK	REMARKS
1	LF2680001	1	MAIN FRAME L UNIT, DCP8040, MFC8440			
1	LF2685001	1	MAIN FRAME L UNIT, DCP8045D/8045DN, MFC8840D/8840DN FOR BEL/NLD/SPA/POR			
1	LF2721001	1	MAIN FRAME L UNIT, DCP8045DN, MFC8840DN FOR GER/UK/FRA/AUS			
1-1	LM2440001	1	MAIN MOTOR ASSY			
1-2	LJ7386001	1	F/R SOLENOID ASSY			
1-3	LJ7391001	1	P/R SOLENOID ASSY			
1-4	LJ5014001	1	SOLENOID RELEASE SPRING P/R			
1-5	LJ9166001	1	TONER LED PCB UNIT ASSY			
1-6	LJ7403001	2	RUBBER FOOT			
1-7	LG3218001	1	DOCUMENT COVER SENSOR			
1-8	LJ7784001	1	SENSOR CLIP			
1-9	LJ7678001	1	REVERSING RELEASE SOLENOID, DCP8045D/8045DN, MFC8840D/8840DN			
1-10	LG4518001	1	THERMISTOR ASSY			
1-11	087320616	4	TAPTITE, CUP S M3X6			
1-12	LJ7377001	1	DEVELOP JOINT			
1-13	LJ7376001	1	JOINT SPRING			
1-14	UH3044000	1	GEAR, 40/54Y			
1-15	UL6569000	2	GEAR 17 PLANETARY			
1-16	UL8977001	1	GEAR 45 ARM F/R			
1-17	LM2444001	1	GEAR 20 CENTER F/R			
1-18	LJ7375001	1	DEV DRIVE GEAR ZL2			ADD

www.drukparts.pl

2. FRAME R

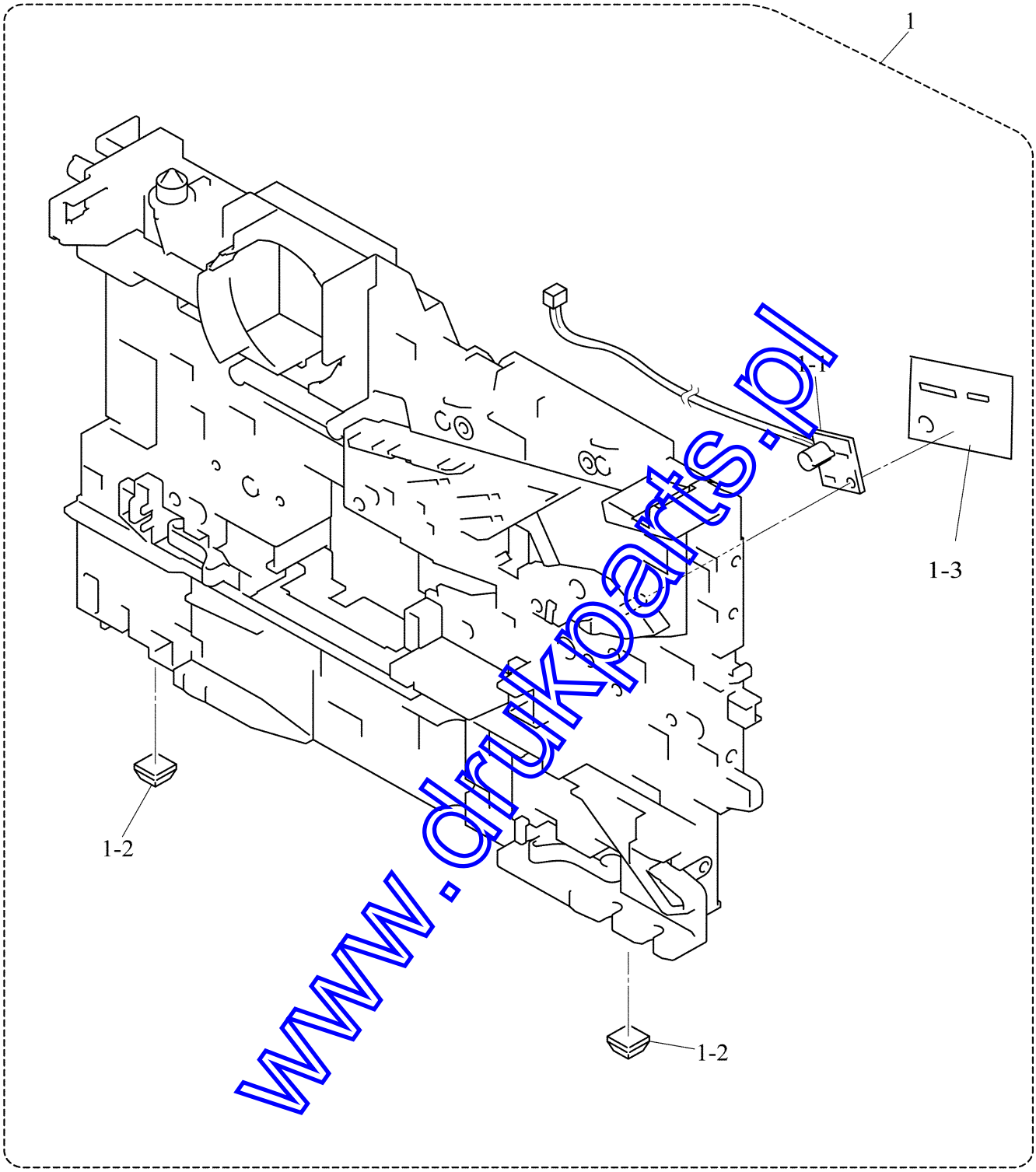

www.drukparts.pl

LIST2(FRAME R)

REF No.	CODE	Q'TY	DESCRIPTION	RECOMMEND	ORDER TO BIUK	REMARKS
1	LM2733001	1	MAIN FRAME R UNIT			
1-1	LJ9612001	1	TONER SENSOR PCB UNIT			
1-2	LJ7403001	2	RUBBER FOOT			
1-3	LM2731001	1	TE FILM			

www.drukparts.pl

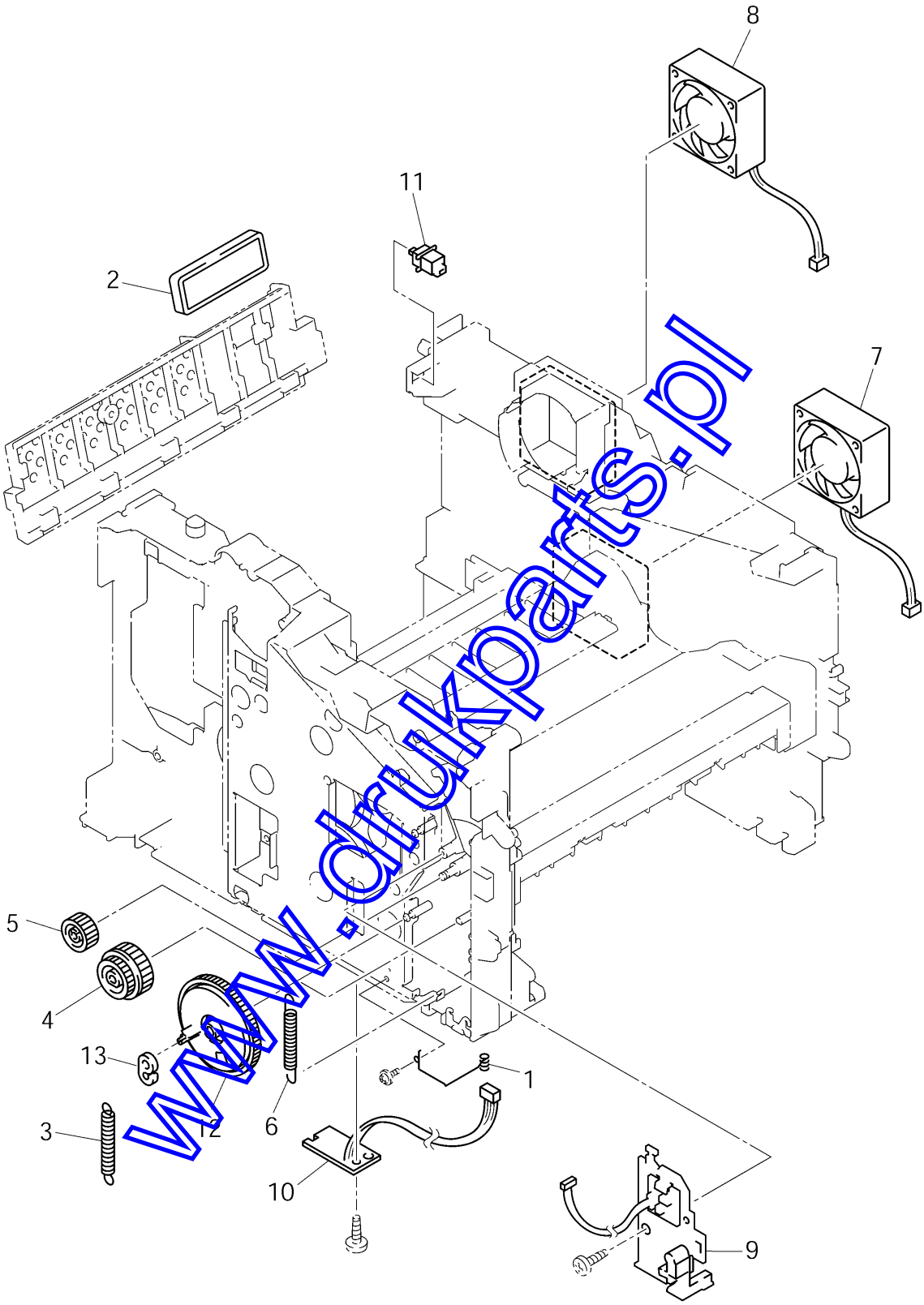

www.drukparts.pl

8C5703/705/713/715/716/733/735/736
8C5743/745/746/783/785/786/793/795/796
8C5822/823/824/825/855/865
8C5903/905/913/915/916/933/935/936
8C5943/945/946/983/985/986/993/995/996

DCP8020/8025D/8025DN, MFC8420/8820D/8820DN
DCP8025J/MFC8820J
M7210/IX2700/IX2701/AGORIS 7216
DCP8040/8045D/8045DN, MFC8440/8840D/8840DN

LIST3(FRAME UNIT)

REF No.	CODE	Q'TY	DESCRIPTION	RECOMMEND	ORDER TO BIUK	REMARKS
1	LJ7490001	1	GROUND SPRING			
2	LM2445001	1	FILTER			
3	LJ7496001	1	SPRING, EXTENSION P/R			
4	LJ7501001	1	MIDDLE ROLLER GEAR			
5	LJ7502001	1	IDLE GEAR 22			
6	LJ7504001	1	GROUND WIRE			
7	LM2473001	1	FAN MOTOR 60 UNIT LV			
8	LM2474001	1	FAN MOTOR 60 UNIT			
9	LJ7579001	1	MP SOLENOID HOLDER UNIT, DCP8045D/8045DN, MFC8840D/8840DN			
10	LJ9237001	1	DX-SENSOR PCB ASSY, DCP8045D/8045DN, MFC8840D/8840DN			
11	LG3218001	1	DOCUMENT COVER SENSOR, DCP8045D/8045DN, MFC8840D/8840DN			
12	LM2720001	1	SECTOR GEAR PR ASSY			
13	UH2378000	1	SPRING HOOK			

www.drukparts.pl

4. LASER UNIT

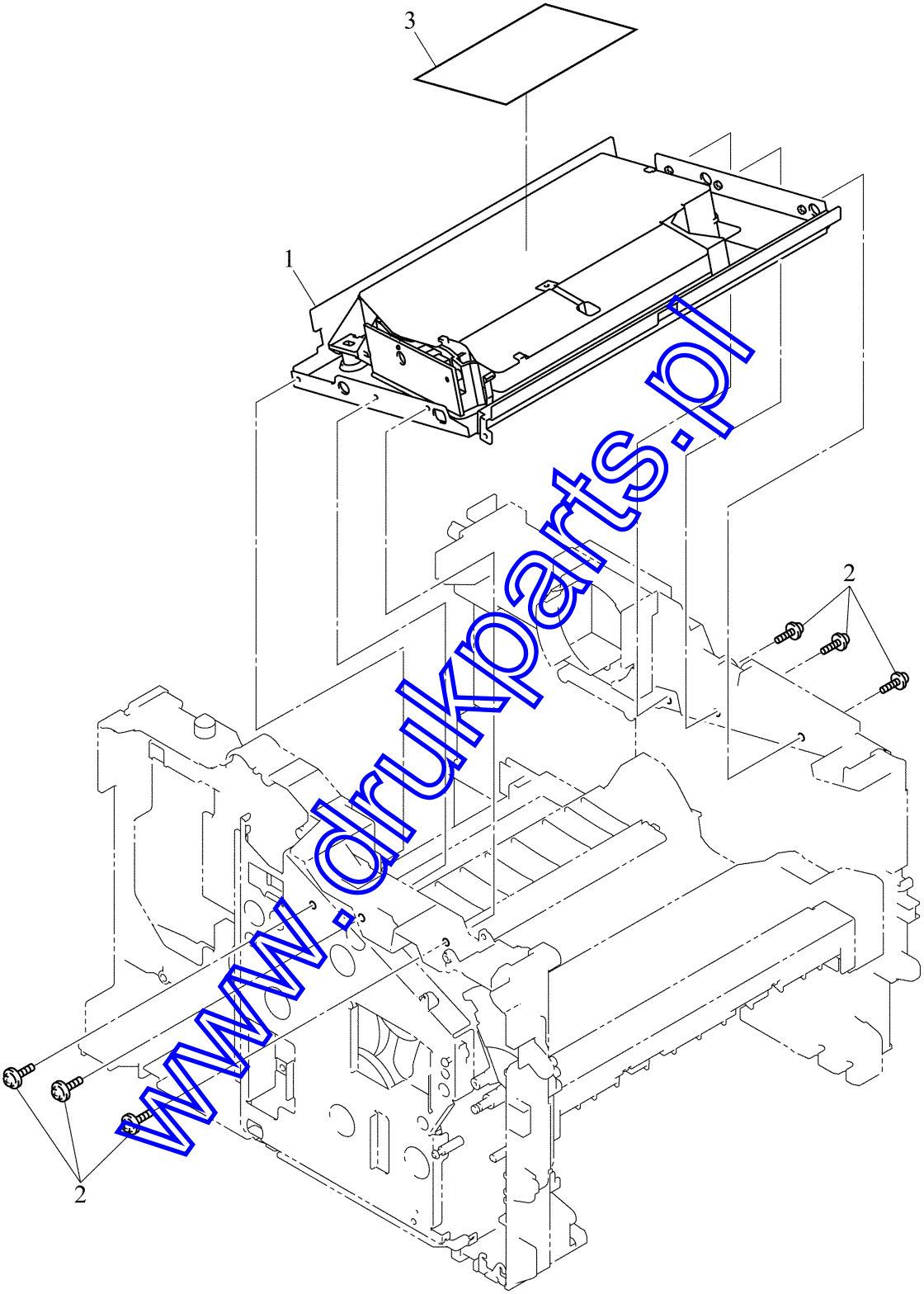

www.drukparts.pl

LIST4(LASER UNIT)

REF No.	CODE	Q'TY	DESCRIPTION	RECOMMEND	ORDER TO BIUK	REMARKS
1	LM2835001	1	LASER UNIT (SP)	√		
2	087320815	6	TAPTITE, CUP S M3X8			
3	LJ0908001	1	LASER CAUTION LABEL EXCEPT FOR CHN			
3	UL7931001	1	LASER CAUTION LABEL FOR CHN			ADD

www.drukparts.pl

5. PAPER FEEDER

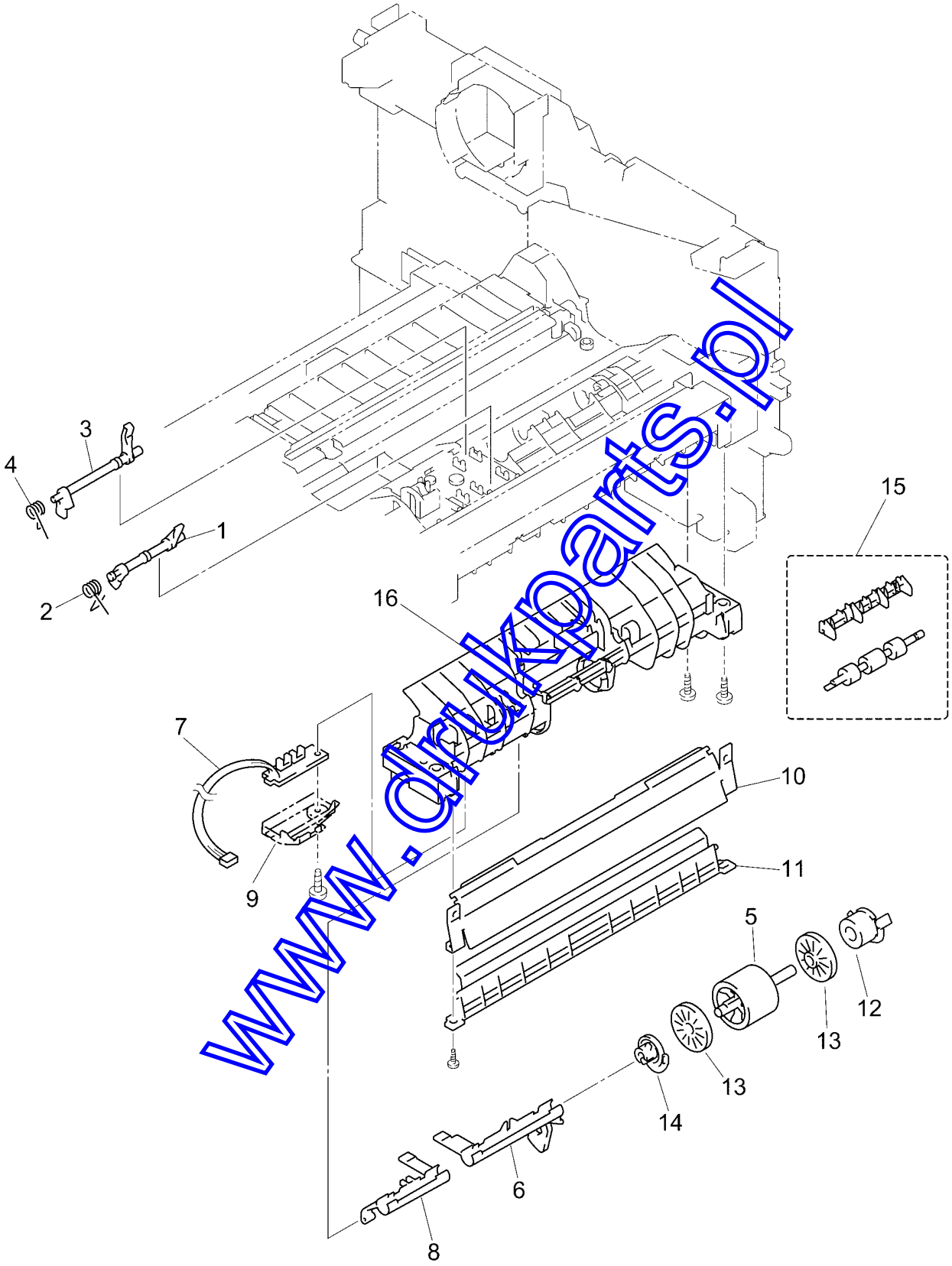

www.drukparts.pl

LIST5(PAPER FEEDER)

REF No.	CODE	Q'TY	DESCRIPTION	RECOMMEND	ORDER TO BIUK	REMARKS
1	LJ7322001	1	REGIST FRONT ACTUATOR			
2	LM2590001	1	REGIST FRONT ACTUATOR SPRING			
3	LJ7324001	1	REGIST REAR ACTUATOR			
4	LJ7325001	1	REGIST REAR ACTUATOR SPRING			
5	LJ7703001	1	PAPER PICK-UP ROLLER ASSY			
6	LM2601001	1	PE ACTUATOR			
7	LJ9235001	1	CASSETTE SENSOR PCB ASSY			
8	LJ5155001	1	CA ACTUATOR			
9	LJ5211001	1	PE SENSOR COVER			
10	LM2033001	1	FRONT CHUTE GUIDE ASSY			
11	LM2032001	1	FRONT TRAY CHUTE ASSY			
12	LJ5021001	1	BUSHING R			
13	LJ7730001	2	ROLLER COLLAR			
14	LJ5020001	1	BUSHING L			
15	LM2953001	1	ROLLER 6 GUIDE ASSY (SP)			CHG
16	LJ7342001	1	FRONT CHUTE, DCP8040, MFC8440			
16	LM2558001	1	FRONT CHUTE, DCP8045D/8045DN, MFC8840D/8840DN			

www.drukparts.pl

6. MP UNIT

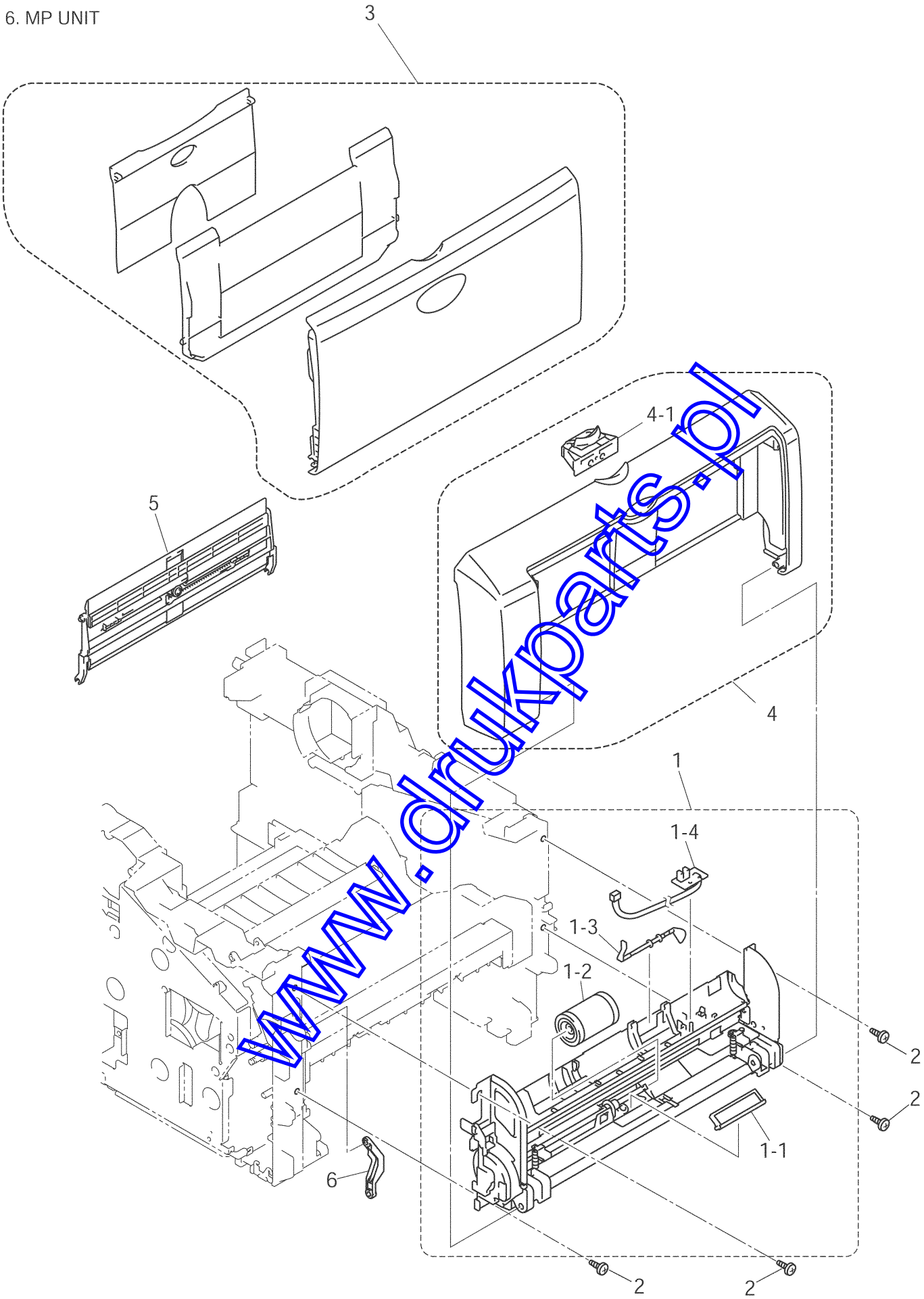

www.drukparts.pl

LIST6(MP UNIT)

REF No.	CODE	Q'TY	DESCRIPTION	RECOMMEND	ORDER TO BIUK	REMARKS
1	LJ7551001	1	MP UNIT ASSY, DCP8045D/8045DN, MFC8840D/8840DN			
1-1	LJ7555001	1	SEPARATION PLATE ASSY, DCP8045D/8045DN, MFC8840D/8840DN			
1-2	LM2050001	1	PAPER PICK-UP ROLLER ASSY (SP), DCP8045D/8045DN, MFC8840D/8840DN			
1-3	LJ7571001	1	MP-PE ACTUATOR, DCP8045D/8045DN, MFC8840D/8840DN			
1-4	LJ9222001	1	MP-PE SENSOR PCB ASSY, DCP8045D/8045DN, MFC8840D/8840DN			
2	085411216	4	TAPTITE, BIND B M4X12, DCP8045D/8045DN, MFC8840D/MFC8840DN			
3	LJ7587001	1	MP TRAY ASSY, DCP8045D/8045DN, MFC8840D/8840DN (NOT INCLUDING A BROTHER EMBLEM.)			
4	LM2313001	1	MP FRONT COVER ASSY, DCP8045D/8045DN, MFC8840D/8840DN			
4-1	LJ7800001	1	MP COVER RELEASE BUTTON, DCP8045D/8045DN, MFC8840D/8840DN			add
5	LJ7589001	1	MP PAPER GUIDE ASSY, DCP8045D/8045DN, MFC8840D/8840DN			
6	LJ7600001	1	DRIVE RELEASE LINK MP, DCP8045D/8045DN, MFC8840D/8840DN			ADD

www.drukparts.pl

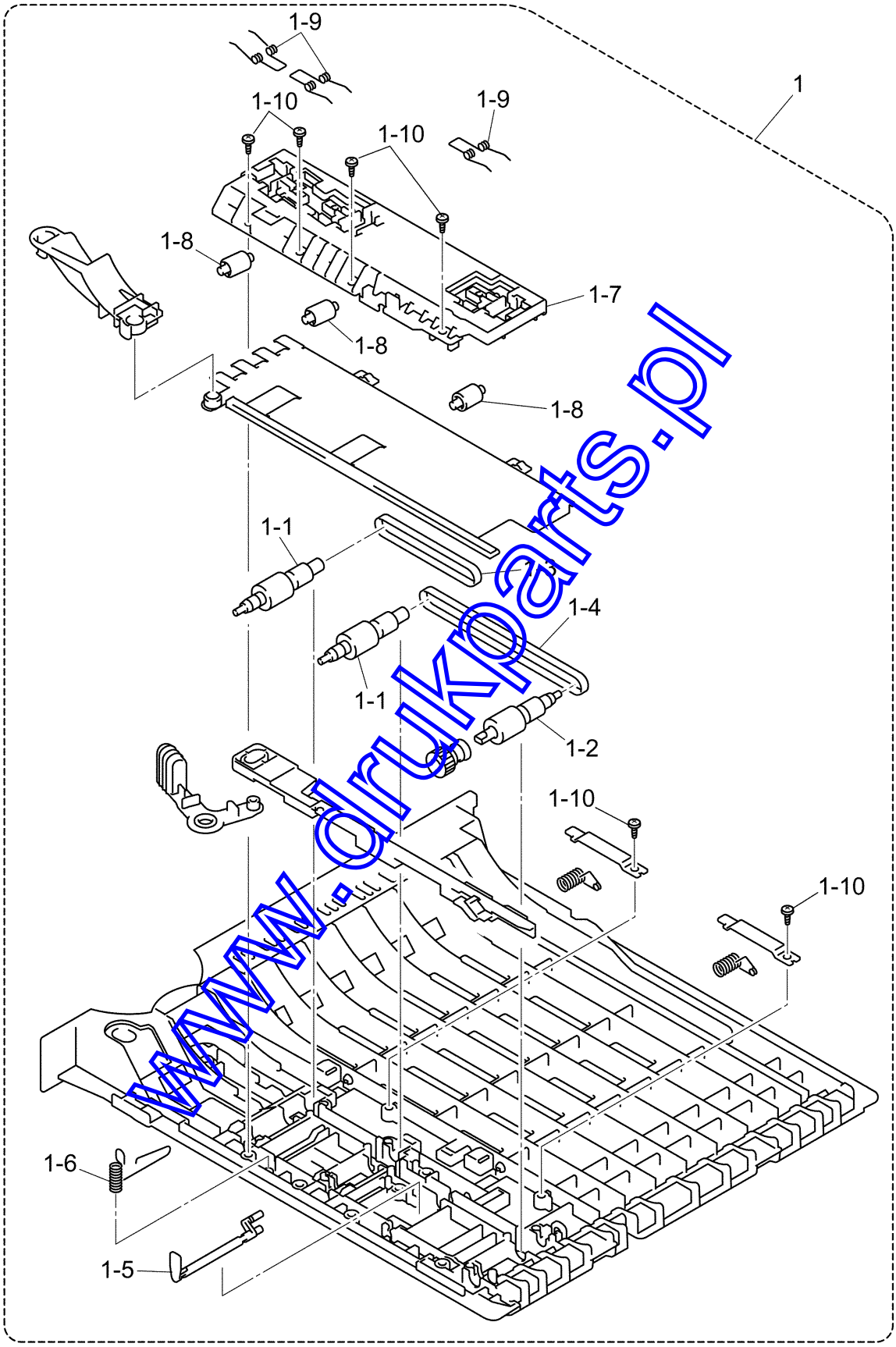

www.drukparts.pl

REF No.	CODE	Q'TY	DESCRIPTION	RECOMMEND	ORDER TO BIUK	REMARK
1	LJ7661001	1	DX FEED ASSY, DCP8045D/8045DN, MFC8840D/8840DN			
1-1	LJ7663001	2	SIDE REGIST ROLLER, DCP8045D/8045DN, MFC8840D/8840DN			
1-2	LJ7664001	1	DX FEED ROLLER, DCP8045D/8045DN, MFC8840D/8840DN			
1-3	LJ5015001	1	T-BELT (S), DCP8045D/8045DN, MFC8840D/8840DN			
1-4	LJ5240001	1	T-BELT (L), DCP8045D/8045DN, MFC8840D/8840DN			
1-5	LJ5248001	1	GUIDE ACTUATOR, DCP8045D/8045DN,			
1-6	LJ7669001	1	GROUND WIRE, DCP8045D/8045DN, MFC8840D/8840DN			
1-7	LJ7670001	1	DX ROLLER HOLDER, DCP8045D/8045DN, MFC8840D/8840DN			
1-8	LJ7671001	3	PRESSURE ROLLER, DCP8045D/8045DN, MFC8840D/8840DN			
1-9	LJ7672001	3	PRESSURE ROLLER SPRING, DCP8045D/8045DN, MFC8840D/8840DN			
1-10	085310816	6	TAPTITE, BIND B M3X8, DCP8045D/8045DN, MFC8840D/8840DN			

www.drukparts.pl

8. PAPER TRAY

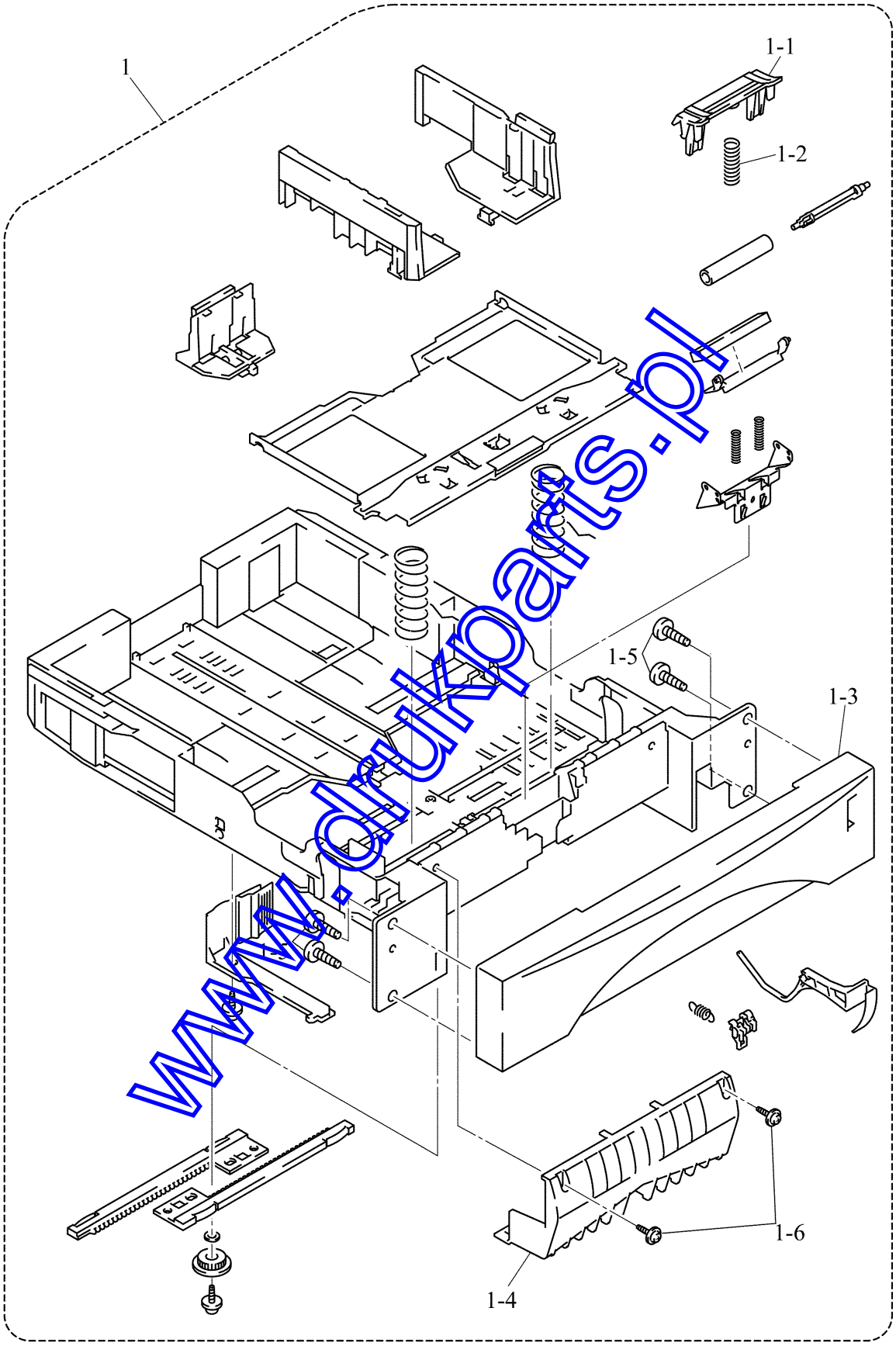

www.drukparts.pl

8C5703/705/713/715/716/733/735/736
8C5743/745/746/783/785/786/793/795/796
8C5822/823/824/825/855/865
8C5903/905/913/915/916/933/935/936
8C5943/945/946/983/985/986/993/995/996

DCP8020/8025D/8025DN, MFC8420/8820D/8820DN
DCP8025J/MFC8820J
M7210/IX2700/IX2701/AGORIS 7216
DCP8040/8045D/8045DN, MFC8440/8840D/8840DN

LIST8(PAPER TRAY)

REF No.	CODE	Q'TY	DESCRIPTION	RECOMMEND	ORDER TO BIUK	REMARK
1	LJ7300001	1	PAPER TRAY ASSY			
1-1	LJ7307001	1	PAD HOLDER			
1-2	LJ5923001	1	SEPARATION PAD SPRING			
1-3	LJ7315001	1	PAPER TRAY FRONT COVER			
1-3	LJ7608001	1	PAPER TRAY FRONT COVER LT			
1-4	LJ7616001	1	PAPER TRAY COVER			
1-5	085411216	4	TAPTITE, BIND B M4X12			
1-6	087311016	2	TAPTITE, CUP B M3X10			

www.drukparts.pl

9. FIXING UNIT

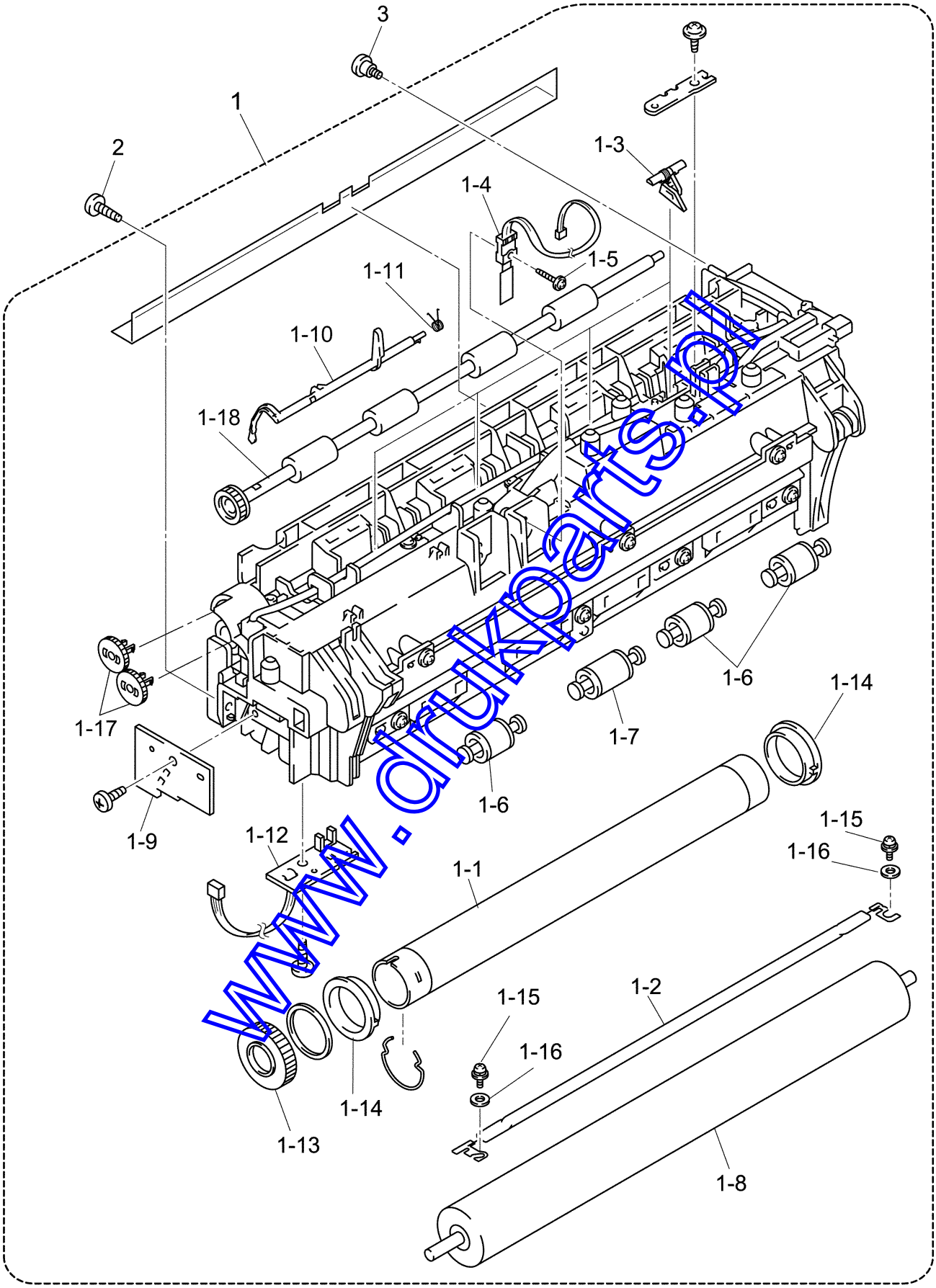

www.drukparts.pl

8C5703/705/713/715/716/733/735/736
8C5743/745/746/783/785/786/793/795/796
8C5822/823/824/825/855/865
8C5903/905/913/915/916/933/935/936
8C5943/945/946/983/985/986/993/995/996

DCP8020/8025D/8025DN, MFC8420/8820D/8820DN
DCP8025J/MFC8820J
M7210/IX2700/IX2701/AGORIS 7216
DCP8040/8045D/8045DN, MFC8440/8840D/8840DN

LIST9(FIXING UNIT)

REF No.	CODE	Q'TY	DESCRIPTION	RECOMMEND	ORDER TO BIUK	REMARKS
1	LM2578001	1	FIXING UNIT, 230V (SP)	√		
1-1	LM2706001	1	HEAT ROLLER 25			CHG
1-2	LJ7539001	1	HALOGEN LAMP, 230V			
1-3	LJ7877001	4	SEPARATE CLAW ASSY			
1-4	LJ7419001	1	THERMISTOR ASSY			
1-5	087311215	1	TAPTITE, CUP B M3X12			
1-6	LJ7428001	3	CLEANER PINCH ROLLER ASSY S			
1-7	LJ7432001	1	CLEANER PINCH ROLLER ASSY L			
1-8	LM2477001	1	PRESSURE ROLLER 25			
1-9	LJ9174001	1	THERMISTOR RELAY PCB ASSY			
1-10	LJ5289001	1	PAPER EJECT ACTUATOR			
1-11	LJ5066001	1	EJECT ACTUATOR SPRING			
1-12	LJ9176001	1	EJECT SENSOR PCB ASSY			
1-13	LJ7416001	1	HR GEAR 34			
1-14	LJ7414001	2	HR BEARING 25			
1-15	LM2254001	2	SCREW, PAN (S/P WASHER) M26X8			
1-16	LM2255001	2	WASHER, PLAIN 26			
1-17	LM2047001	2	IDLE GEAR 13			
1-18	LJ4118001	1	EJECT ROLLER ASSY			
2	085411216	1	TAPTITE, BIND B M4X12			
3	LJ4740001	1	SHOULDER SCREW			

www.drukparts.pl

10. COVERS

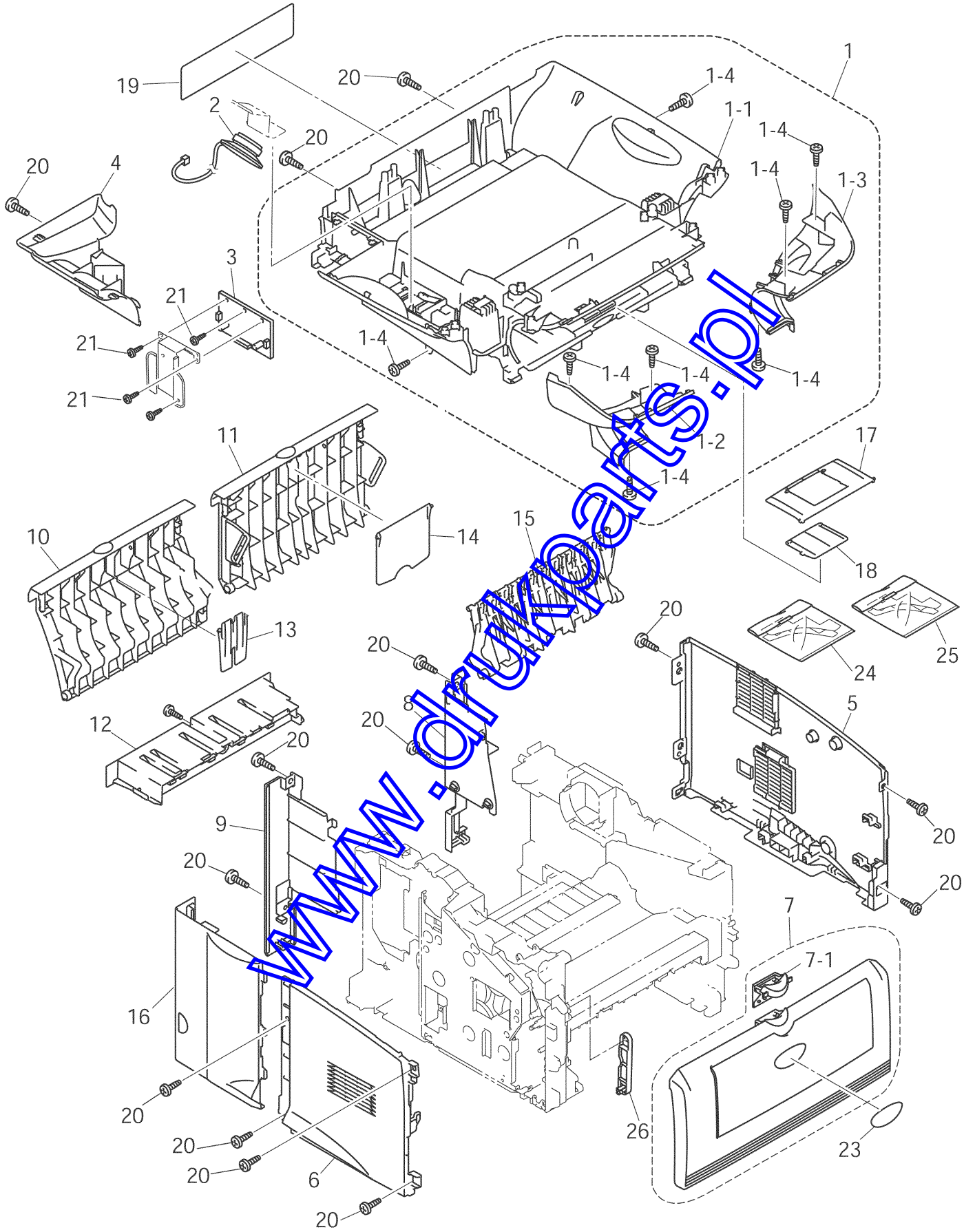

www.drumparts.pl

REF No.	CODE	Q'TY	DESCRIPTION	RECOMMEND	ORDER TO BIUK	REMARKS
1	LF2126001	1	JOINT COVER ASSY			
1	LP2318001	1	JOINT COVER ASSY WITH RIB*			add
1-1	LE8599001	1	JOIN COVER			
1-2	LE8600001	1	JOINT COVER FRONT L			
1-3	LE8601001	1	JOINT COVER FRONT R			
1-4	085411216	8	TAPTITE, BIND B M4X12			
2	LG2630001	1	SPEAKER ASSY			
3	LG4377001	1	DRIVER PCB ASSY			
4	LE8603001	1	DRIVER PCB ACCESS COVER			
5	LJ7453001	1	SIDE COVER R			
6	LM2448001	1	SIDE COVER L			
7	LM2724001	1	FRONT COVER ASSY, DCP8040, MFC8440 EXCEPT FOR CHN (*)			
7	LF6615001	1	FRONT COVER ASSY, MFC8440 FOR CHN (*)			add
			*: FRONT COVER ASSY FOR DCP8045D/ DCP8045D/ MFC8840D/ MFC8840DN is listed in List 6 as a "MP TRAY ASSY"			
7-1	LJ7463001	1	FRONT COVER RELEASE BUTTON, DCP8040, MFC8440			add
8	LJ7465001	1	REAR COVER R, DCP8040, MFC8440			
8	LJ7617001	1	REAR COVER R MP, DCP8045D/8045DN, MFC8840D/8840DN			
9	LJ7466001	1	REAR COVER L, DCP8040			
9	LJ7618001	1	REAR COVER L MP, DCP8045D/8045DN			
9	LE8767001	1	REAR COVER L, MFC8440			
9	LE8604001	1	REAR COVER L MFC MP, MFC8840D/8840DN			
10	LJ7469001	1	OUTER CHUTE, DCP8040, MFC8440			
11	LJ7610001	1	REAR COVER MP, MFC8840D/8840DN, DCP8045D/8045DN			
12	LJ7467001	1	REAR COVER C, DCP8040, MFC8440			
13	LJ7470001	1	OUTER CHUTE TRAY, DCP8040, MFC8440			
14	LJ7613001	1	REAR COVER MP TRAY, DCP8045D/8045DN, MFC8840D/8840DN			
15	LJ7699001	1	OUTER CHUTE MP ASSY, DCP8045D/8045DN, MFC8840D/8840DN			
16	LF2455001	1	ACCESS COVER			
17	LJ7895001	1	SUPPORT FLAP			
18	LJ7896001	1	SUPPORT FLAP S			
19	LJ7353001	1	HEATER CAUTION LABEL EXCEPT FOR CHN			
19	LJ7981001	1	HEATER CAUTION LABEL FOR CHN			add
20	085411216	14	TAPTITE, BIND B M4X12			
21	087311016	3	TAPTITE, BIND B M3X10			
(22)	UF5745000	1	MJ COVER, EXT, MFC8440/8840D/8840DN FOR GER/UK/FRA/BEL/DEN/AUS/ITA			
23	LE8812001	1	BROTHER EMBLEM FOR MFC8840D/MFC8840DN			add
23	LE8890001	1	BROTHER EMBLEM FOR MFC8440			add
23	LE8891001	1	BROTHER EMBLEM FOR DCP8040/DCP8045D/DCP8045DN			add
24	LM2978001	1	TOP COVER RIB ASSY (SP)			add
25	LM6340001	1	TOP COVER RIB ASSY 2 (SP)			add
26	LJ7468001	1	LINK, DCP8040/MFC8440			ADD

*JOINT COVER ASSY WITH RIB consists of
JOINT COVER ASSY, 9 pieces of TOP COVER RIB and
2 pieces of TOP COVER RIB 2.

www.drukparts.pl

11. SCANNER

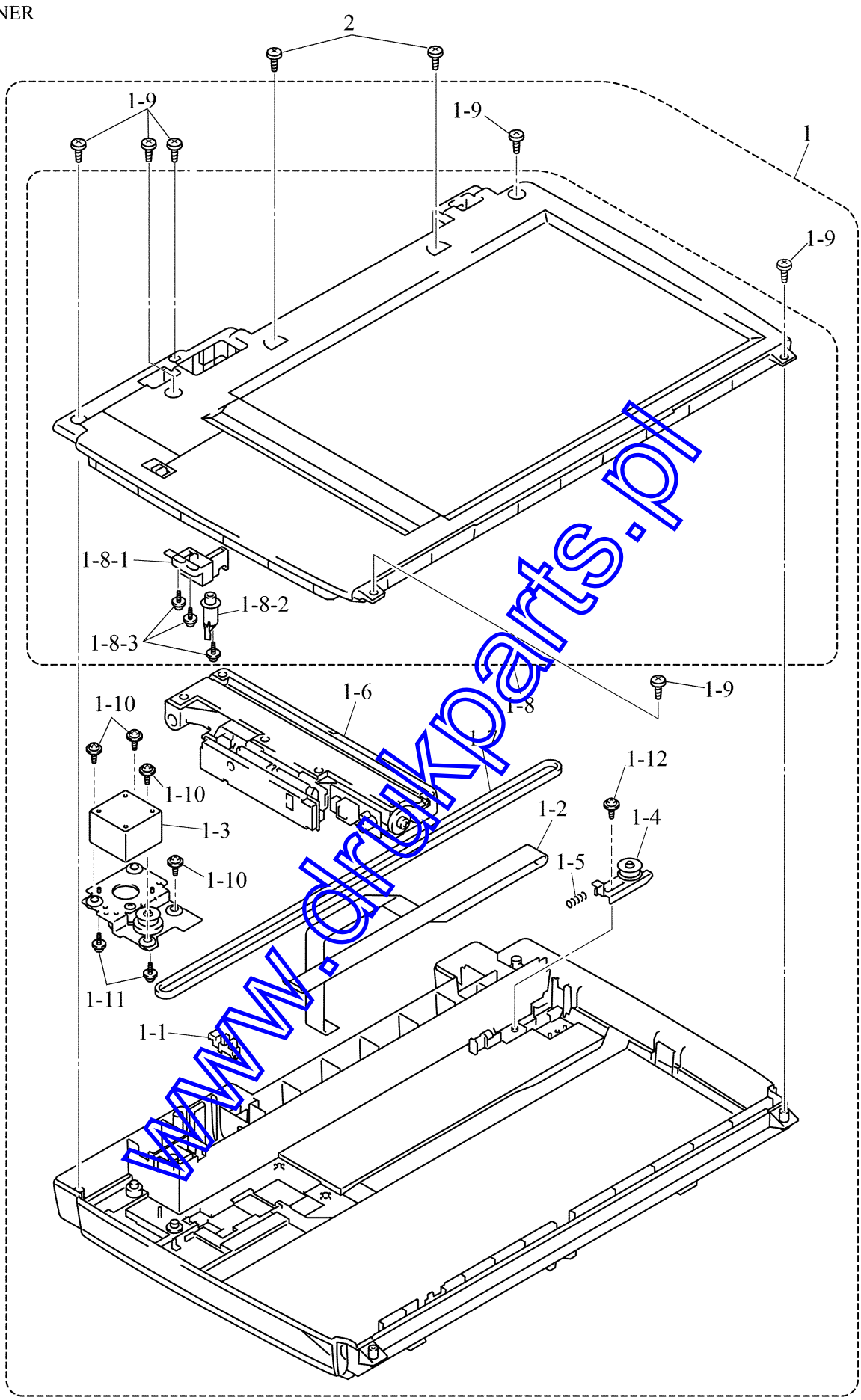

www.drukparts.pl

8C5703/705/713/715/716/733/735/736
8C5743/745/746/783/785/786/793/795/796
8C5822/823/824/825/855/865
8C5903/905/913/915/916/933/935/936
8C5943/945/946/983/985/986/993/995/996

DCP8020/8025D/8025DN, MFC8420/8820D/8820DN
DCP8025J/MFC8820J
M7210/IX2700/IX2701/AGORIS 7216
DCP8040/8045D/8045DN, MFC8440/8840D/8840DN

LIST11(SCANNER)

REF No.	CODE	Q'TY	DESCRIPTION	RECOMMEND	ORDER TO BIUK	REMARKS
1	LF2923001	1	SCANNER UNIT SUPPLY ASSY	√		
1-1	LG2239001	1	PHOTO INTERRUPTER			
1-2	LE8618001	1	FFC CABLE ASSY			
1-3	LE8632001	1	SCANNING MOTOR FB			
1-4	LE8634001	1	PULLEY ASSY			
1-5	LE8640001	1	PULLEY SPRING			
1-6	LF2037001	1	CCD MODULE(SP)			
1-7	LE8642001	1	BELT			
1-8	LE8646001	1	TOP COVER ASSY			
1-8-1	LF2004001	1	LOCK LEVER ASSY			
1-8-2	LE8649001	1	LOCK LEVER B			
1-8-3	UF5034001	3	TAPTITE, B 3X6			
1-9	087411216	6	TAPTITE, CUP B M4X12			
1-10	LE2861001	4	TAPTITE, PAN B M3X8			
1-11	0A4300605	2	SCREW, PAN (S/P WASHER) M3X6			
1-12	UF5034001	1	TAPTITE, B 3X6			
2	087412016	2	TAPTITE, CUP B M4X20			

www.drukparts.pl

12. ADF

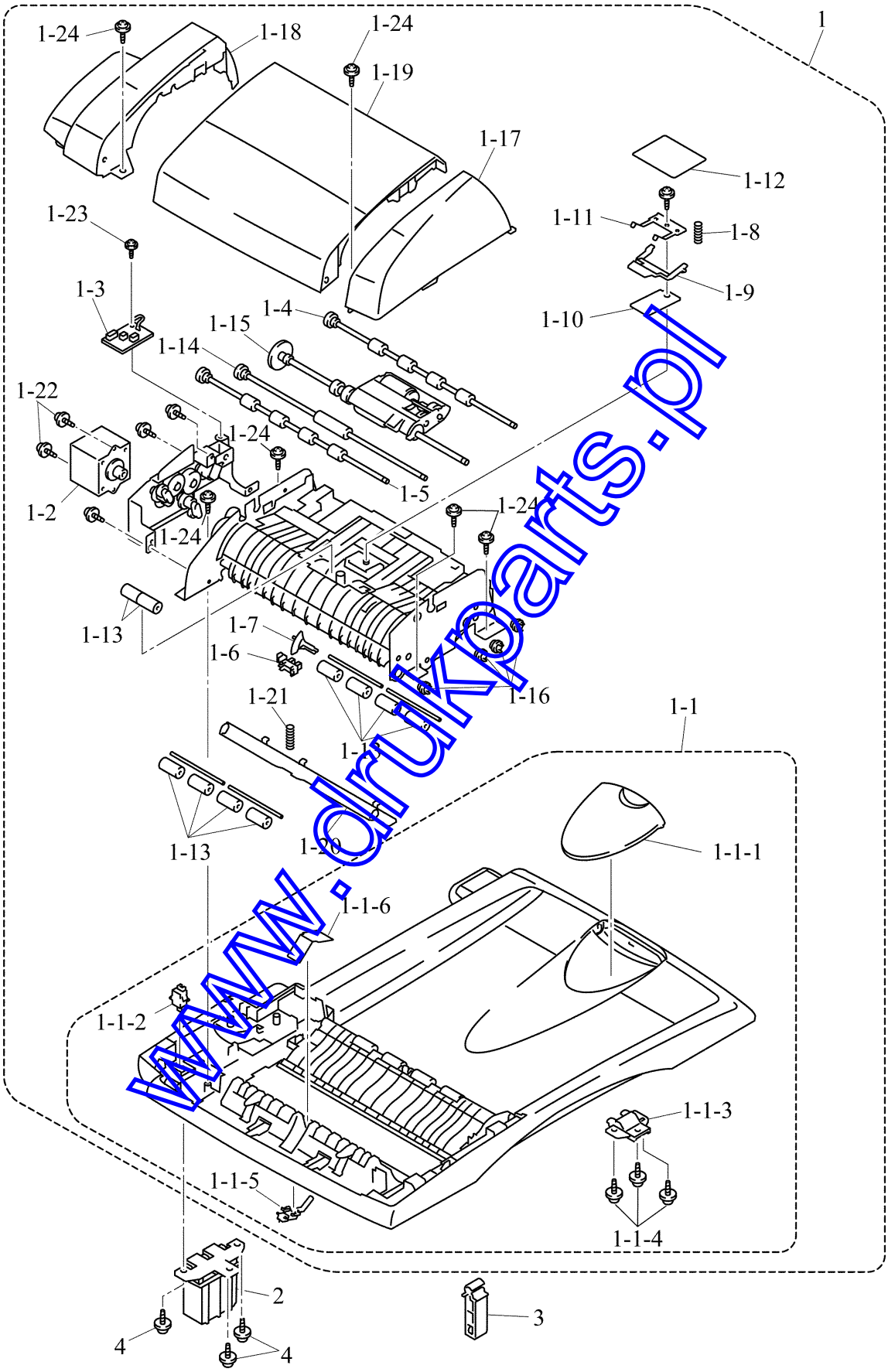

www.drukparts.pl

8C5703/705/713/715/716/733/735/736
8C5743/745/746/783/785/786/793/795/796
8C5822/823/824/825/855/865
8C5903/905/913/915/916/933/935/936
8C5943/945/946/983/985/986/993/995/996

DCP8020/8025D/8025DN, MFC8420/8820D/8820DN
DCP8025J/MFC8820J
M7210/IX2700/IX2701/AGORIS 7216
DCP8040/8045D/8045DN, MFC8440/8840D/8840DN

REF No.	CODE	Q'TY	DESCRIPTION	RECOMMEND	ORDER TO BIUK	REMARKS
1	LP2422001	1	ADF UNIT (SP)	√		CHG
1-1	LE8660001	1	DOCUMENT COVER LGL SUB ASSY			
1-1-1	LE8663001	1	DOCUMENT EJECTION TRAY			
1-1-2	LG3218001	1	DOCUMENT COVER SENSOR			
1-1-3	LE6245001	1	HINGE ARM R			
1-1-4	087311016	3	TAPTITE, CUP B M3X10			
1-1-5	LG4567001	1	DOCUMENT REAR SENSOR			
1-1-6	LE8998001	1	REAR SENSOR FILM			
1-2	LE8688001	1	ADF MOTOR			
1-3	LG4376001	1	ADF RELAY PCB ASSY			
1-4	LE8704001	1	LF ROLLER2 ASSY			
1-5	LE8711001	1	EJECTION ROLLER ASSY			
1-6	LG2239001	1	PHOTO INTERRUPTER			
1-7	LE8828001	1	FRONT SENSOR ACTUATOR ASSY			
1-8	LE2011001	1	COMPRESSION SPRING			
1-9	LE2551001	1	RUBBER HOLDER			
1-10	UU2055001	1	SEPARATION RUBBER			
1-11	LE1513001	1	SPRING PLATE ADF FRONT A ASSY			
1-12	LE2470001	1	ADF FILM			
1-13	UF9009001	10	PRESSER ROLLER			
1-14	LE8722001	1	LF ROLLER1 ASSY			
1-15	LE2919001	1	PF ROLLER HOLDER ASSY			
1-16	UU1290001	4	CONDUCTIVE BUSHING			
1-17	LE8727001	1	SIDE COVER F			
1-18	LE8728001	1	SIDE COVER R			
1-19	LE8729001	1	ADF COVER			
1-20	LE8834001	1	DOCUMENT HOLD ASSY			
1-21	LF2026001	1	DOCUMENT HOLD SPRING			
1-22	0A4300605	2	SCREW, PAN (S/P WASHER) M3X6			
1-23	087320616	1	TAPTITE, CUP S M3X6			
1-24	087311016	6	TAPTITE, CUP B M3X10			
2	LP2403001	1	HINGE ASSY L			chg
3	LE6244001	1	HINGE BASE R			
4	087311016	3	TAPTITE, CUP B M3X10			

www.drukparts.pl

13. PANEL

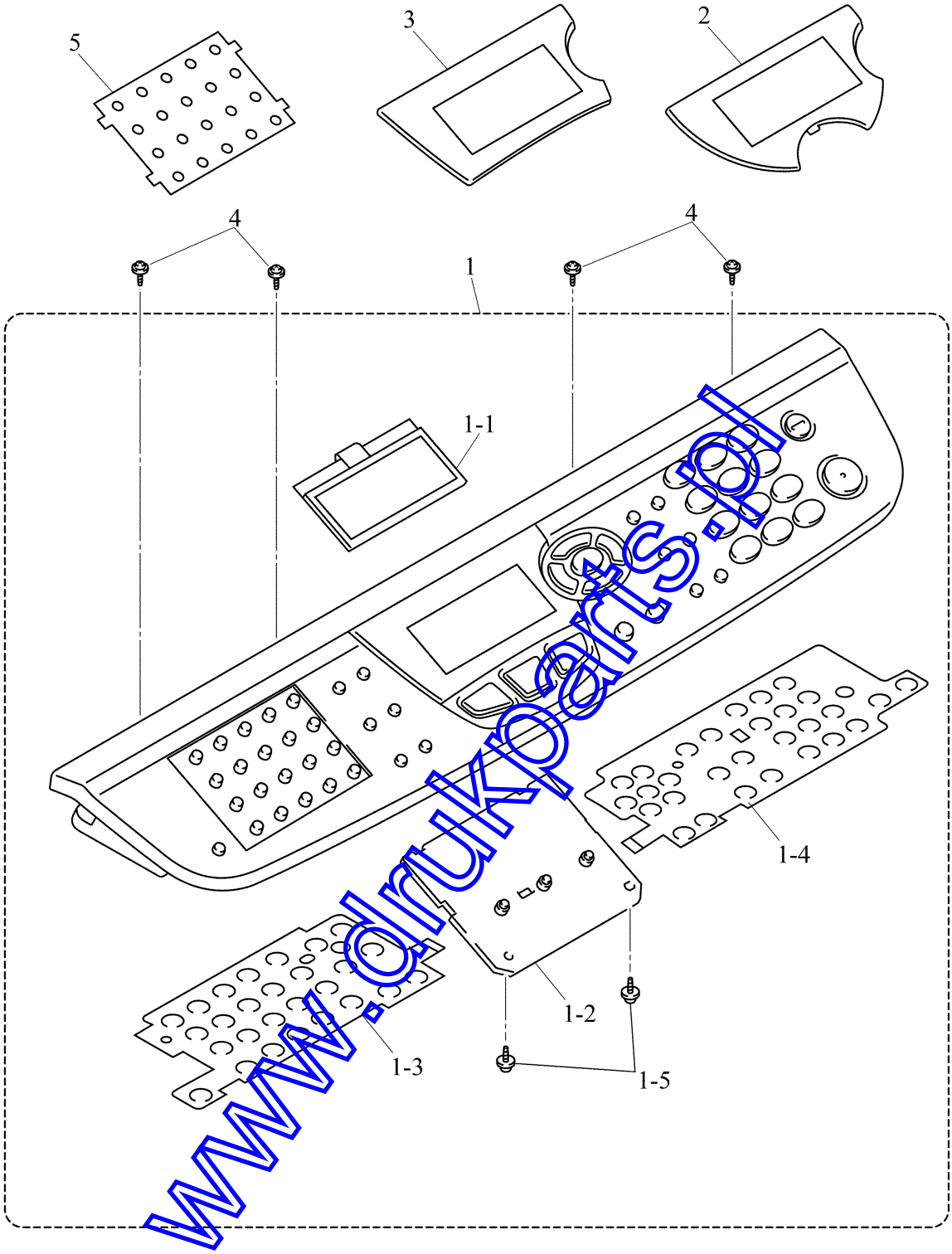

www.drukparts.pl

REF No.	CODE	Q'TY	DESCRIPTION	RECOMMEND	ORDER TO BIUK	REMARKS
1	LF2958001	1	PANEL UNIT, DCP8040 FOR GER	√		
1	LF2972001	1	PANEL UNIT, DCP8045D/8045DN FOR GER	√		
1	LE8798001	1	PANEL UNIT, MFC8440 FOR GER/AUS	√		
1	LE8850001	1	PANEL UNIT, MFC8840D/8840DN FOR GER/AUS	√		
1	LF2683001	1	PANEL UNIT, DCP8040 FOR UK/ASA/GNR	√		
1	LF2686001	1	PANEL UNIT, DCP8045D/8045DN FOR UK/ASA/GNR	√		
1	LE8942001	1	PANEL UNIT, MFC8440 FOR UK/IRE/GNR	√		
1	LE8999001	1	PANEL UNIT, MFC8840D/8840DN FOR UK/IRE/GNR	√		
1	LF2963001	1	PANEL UNIT, DCP8040 FOR FRA	√		
1	LF2974001	1	PANEL UNIT, DCP8045D/8045DN FOR FRA	√		
1	LE8947001	1	PANEL UNIT, MFC8440 FOR FRA	√		
1	LF2005001	1	PANEL UNIT, MFC8840D/8840DN FOR FRA	√		
1	LF2987001	1	PANEL UNIT, DCP8040 FOR BEL/NLD/CHE/DEN/PND	√	√	
1	LF6017001	1	PANEL UNIT, DCP8045D FOR BEL/NLD/CHE/DEN/PND	√	√	
1	LE8952001	1	PANEL UNIT, MFC8440 FOR BEL/NLD/CHE	√	√	
1	LF2003001	1	PANEL UNIT, MFC8840D/8840DN FOR BEL/NLD/CHE	√	√	
1	LE8973001	1	PANEL UNIT, MFC8440 FOR DEN/PND	√	√	
1	LF2010001	1	PANEL UNIT, MFC8840D FOR DEN/PND	√	√	
1	LF2988001	1	PANEL UNIT, DCP8040 FOR SPA	√	√	
1	LF6022001	1	PANEL UNIT, DCP8045D/8045DN FOR SPA	√	√	
1	LE8984001	1	PANEL UNIT, MFC8440 FOR SPA	√	√	
1	LF2013001	1	PANEL UNIT, MFC8840D/8840DN FOR SPA	√	√	
1	LF2989001	1	PANEL UNIT, DCP8040 FOR ITA	√	√	
1	LF6026001	1	PANEL UNIT, DCP8045D FOR ITA	√	√	
1	LE8968001	1	PANEL UNIT, MFC8440 FOR ITA	√	√	
1	LF2017001	1	PANEL UNIT, MFC8840D FOR ITA	√	√	
1	LF6016001	1	PANEL UNIT, DCP8040 FOR POR	√	√	
1	LF6024001	1	PANEL UNIT, DCP8045D FOR POR	√	√	
1	LE8985001	1	PANEL UNIT, MFC8440 FOR POR	√	√	
1	LF2019001	1	PANEL UNIT, MFC8840D/8840DN FOR POR	√	√	
1	LF6619001	1	PANEL UNIT, MFC8440 FOR CHN	√		ADD
1	LE8732001	1	PANEL UNIT, MFC8440 FOR ASA/OCE	√		
1	LE8846001	1	PANEL UNIT, MFC8840D FOR ASA/OCE	√		
1-1	LG4383001	1	LCD			
1-2	LG4411001	1	PANEL PCB ASSY, DCP8040/8045D/8045DN			
1-2	LG4384001	1	PANEL PCB ASSY, MFC8440/8840D/8840DN			
1-3	LG4393001	1	FPC KEY ONE TOUCH			
1-4	LG4392001	1	FPC KEY COPY			
1-5	087310815	2	TAPTITE, CUP B M3X8			
2	LE8771001	1	LCD SHEET, DCP8040/8045D/8045DN	√		
3	LF2681001	1	LCD SHEET, MFC8440	√		
3	LF2688001	1	LCD SHEET, MFC8840D/8840DN	√		
4	087411215	4	TAPTITE, CUP B M4X12			
5	LE8752001	1	ADDRESS LABEL, MFC8440/8840D/8840DN			

www.drukparts.pl

14. PCB

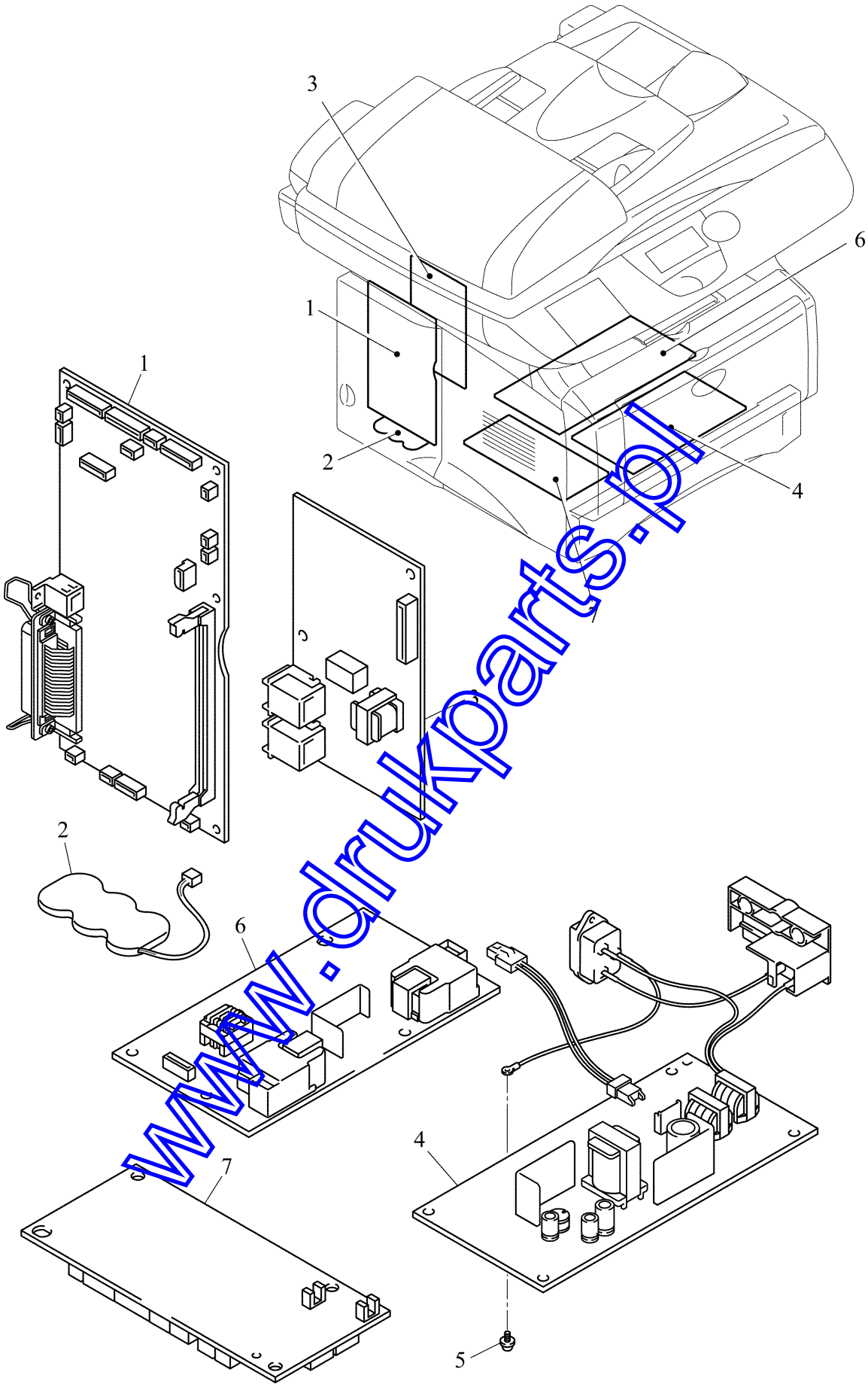

www.drukparts.pl

8C5703/705/713/715/716/733/735/736
8C5743/745/746/783/785/786/793/795/796
8C5822/823/824/825/855/865
8C5903/905/913/915/916/933/935/936
8C5943/945/946/983/985/986/993/995/996

DCP8020/8025D/8025DN, MFC8420/8820D/8820DN
DCP8025J/MFC8820J
M7210/IX2700/IX2701/AGORIS 7216
DCP8040/8045D/8045DN, MFC8440/8840D/8840DN

REF No.	CODE	Q'TY	DESCRIPTION	RECOMMEND	ORDER TO BIUK	REMARKS
1	LG5374001	1	MAIN PCB ASSY, DCP8040/8045D/8045DN	√		B53K627
1	LG5378001	1	MAIN PCB ASSY, MFC8440 EXCEPT FOR CHN, MFC8840D, MFC8840DN	√		B53K627
1	LG6108020	1	MAIN PCB ASSY, MFC8440 FOR CHN	√		B53K627
2	LG4823001	1	BATTERY, MFC8440/8840D/8840DN			
3	LG5602001	1	NCU PCB ASSY, MFC8440/8840D/8840DN EXCEPT FOR CHN/ASA/OCE	√		B53K666
3	LG4520040	1	NCU PCB ASSY, MFC8440/8840D/8840DN FOR CHN/ASA	√		B53K666
3	LG4520006	1	NCU PCB ASSY, MFC8440/8840D/8840DN FOR OCE	√		B53K666
4	LG5288001	1	LOW-VOLTAGE PS PCB ASSY, DCP8040/8045D/8045DN, MFC8440/8840D/8840DN FOR GER/UK/FRA/BEL/NLD/CHE/IRE/DEN/AUS/SPA/ITA/POR/OCE/PND/GNR			
4	LG5220001	1	LOW-VOLTAGE PS PCB ASSY, MFC8440 FOR CHN			ADD
4	LG5564001	1	LOW-VOLTAGE PS PCB ASSY, MFC8440/8840D FOR ASA			
5	LM2048001	1	SCREW, PAN (S/P WASHER) M3.5X6			
6	LJ9200001	1	HIGH-VOLTAGE PS PCB ASSY			
7	LG4404001	1	ENGINE PCB ASSY, MFC8440, DCP8040			
7	LJ9274001	1	ENGINE PCB ASSY, MFC8840D/8840DN, DCP8045D/8045DN			

www.drukparts.pl

15. ACCESSORIES

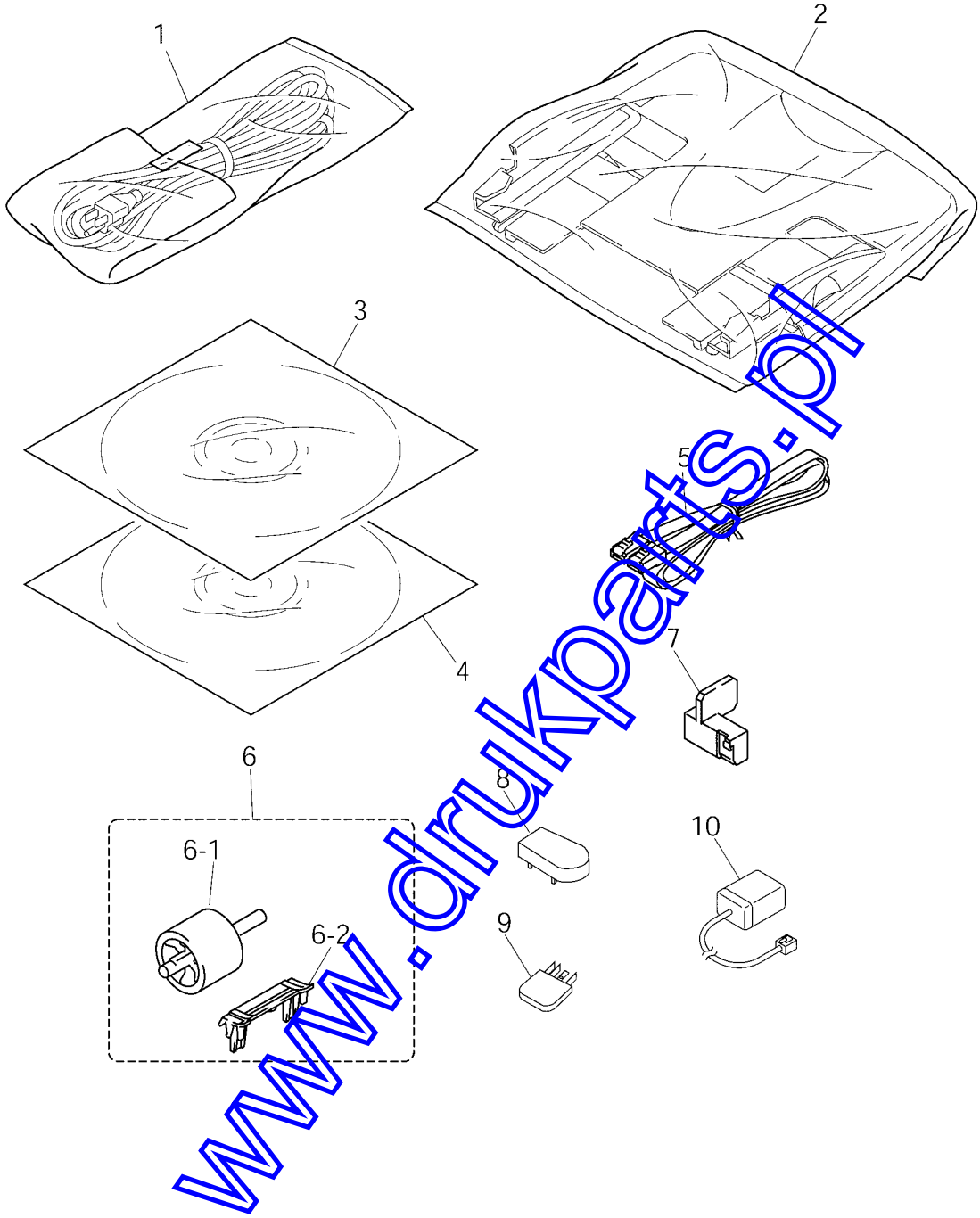

www.drukparts.pl

REF No.	CODE	Q'TY	DESCRIPTION	RECOMMEND	ORDER TO BIUK	REMARKS
1	LG4424001	1	AC CORD BAG ASSY, VDE FOR GER/FRA/BEL/NLD/AUS/SPA/ITA/POR/PND/ASA/GNR			
1	LG6208001	1	AC CORD BAG ASSY LF BS/PSB FOR UK/IRE/ASA			chg
1	LG4718001	1	AC CORD BAG ASSY, SEV FOR CHE		√	
1	LG4720001	1	AC CORD BAG ASSY, DEMCO FOR DEN		√	
1	LJ9353001	1	AC CORD BAG ASSY, FOR CHN			add
1	LJ9667001	1	AC CORD BAG ASSY, SAA FOR OCE, DCP8040/8045D FOR ASA			
2	LE8833001	1	DOCUMENT TRAY BAG ASSY			
~~3~~	~~LF2808001~~	~~1~~	~~CD-ROM ASSY, DCP8040/8045D/8045DN FOR GER/UK/FRA/ASA/OCE <Macintosh>~~			del
3	LF6298001	1	CD-ROM ASSY FOR DCP8040/8045D/8045DN <Macintosh>			chg
~~3~~	~~LF6042001~~	~~1~~	~~CD-ROM ASSY, MFC8440/8840D/8840DN FOR GER/UK/FRA/IRE/AUS/ASA/OCE <Macintosh>~~			del
3	LF6299001	1	CD-ROM ASSY FOR MFC8440/8840D/8840DN EXCEPT FOR CHN <Macintosh>			chg
4	LF6290001	1	CD-ROM ASSY, DCP8040/8045D/8045DN FOR GER/UK/FRA/CHE/ASA <Windows>			chg
4	LF6294001	1	CD-ROM ASSY, MFC8440/8840D/8840DN FOR GER/UK/FRA/CHE/IRE/AUS /ASA/OCE <Windows>			chg
4	LF6291001	1	CD-ROM ASSY, DCP8040/8045D FOR BEL/NLD/PND/GNR <Windows>			chg
4	LF6295001	1	CD-ROM ASSY, MFC8440/8840D/8840DN FOR BEL/NLD/PND/GNR <Windows>			chg
4	LF6292001	1	CD-ROM ASSY, DCP8040/8045D FOR DEN/PND <Windows>		√	chg
4	LF6296001	1	CD-ROM ASSY, MFC8440/8840D FOR DEN/PND <Windows>		√	chg
4	LF6293001	1	CD-ROM ASSY, DCP8040/8045D/8045DN FOR SPA/ITA/POR <Windows>		√	chg
4	LF6288001	1	CD-ROM ASSY, MFC8440/8840D/8840DN FOR SPA/ITA/POR <Windows>		√	chg
4	LF6621001	1	CD-ROM ASSY, MFC8440 FOR CHN			add
5	UG3625001	1	TELEPHONE LINE CORD, MFC8440/8840D/8840DN FOR GER			
5	UG3626001	1	TELEPHONE LINE CORD, MFC8440/8840D/8840DN FOR UK			
5	UG3627001	1	TELEPHONE LINE CORD, MFC8440/8840D/8840DN FOR FRA			
5	UG1575001	1	TELEPHONE LINE CORD, MFC8440/8840D/8840DN FOR BEL		√	
5	LG3077001	1	TELEPHONE LINE CORD, MFC8440/8840D/8840DN FOR NLD/IRE/SPA/POR/CHN/ASA/OCE/GNR			
5	LG7202001	1	TELEPHONE LINE CORD, MFC8440/8840D FOR CHE		√	CHG
5	LG5827001	1	TELEPHONE LINE CORD, MFC8440/8840D FOR DEN/PND		√	chg
5	UG4205001	1	TELEPHONE LINE CORD, MFC8440/8840D/8840DN FOR AUS			
5	UG3634001	1	TELEPHONE LINE CORD, MFC8440/8840D FOR ITA		√	
5	~~UG3629001~~	~~1~~	~~TELEPHONE LINE CORD, MFC8440/8840D FOR PND <NORWAY>~~		√	del
5	~~UG3635001~~	~~1~~	~~TELEPHONE LINE CORD, MFC8440/8840D FOR PND <SWEDEN>~~		√	del
5	~~UG3632001~~	~~1~~	~~TELEPHONE LINE CORD, MFC8440/8840D FOR PND <FINLAND>~~		√	del
5	UG3290001	1	TELEPHONE LINE CORD, MFC8440/8840D FOR ASA/OCE		√	
6	LJ7920001	1	PAPER FEEDING KIT			
6-1	LJ7703001	1	PAPER PICK-UP ROLLER ASSY			
6-2	LJ7307001	1	PAD HOLDER			
7	LM2102001	1	FU LAMP ASSEMBLY JIG ASSY			
8	LG3622001	1	TELEPHONE PLUG, MFC8440/8840D/8840DN FOR NLD			
8	LG5828001	1	TELEPHONE PLUG, MFC8440/8840D FOR DEN/PND <DENMARK>			add
8	LG5829001	1	TELEPHONE PLUG, MFC8440/8840D FOR PND <FINLAND>			add
8	LG5830001	1	TELEPHONE PLUG, MFC8440/8840D FOR PND <SWEDEN>			add
9	LG3509001	1	TELEPHONE PLUG, MFC8440/8840D/8840DN FOR OCE			
10	UG3468000	1	BT-MJ ADAPTER, MFC8440/8840D FOR ASA			

www.drukparts.pl

REF No.	CODE	Q'TY	DESCRIPTION	RECOMMEND	ORDER TO BIUK	REMARKS
(1)	LF6336001	1	USER'S GUIDE, DCP8040/8045D/8045DN FOR GER			chg
(1)	LF6340001	1	USER'S GUIDE, MFC8440/8840D/8840DN FOR GER/AUS			chg
(1)	LF6335004	1	USER'S GUIDE, DCP8040/8045D/8045DN FOR UK/ASA/PND/GNR			chg
(1)	LF6337004	1	USER'S GUIDE, MFC8440/8840D/8840DN FOR UK/IRE/PND/GNR			chg
(1)	LF6335005	1	USER'S GUIDE, DCP8040/8045D/8045DN FOR FRA			chg
(1)	LF6337005	1	USER'S GUIDE, MFC8440/8840D/8840DN FOR FRA			chg
(1)	LF6338008	1	USER'S GUIDE, DCP8040/8045D FOR BEL/CHE		√	chg
(1)	LF6335008	1	USER'S GUIDE, DCP8040/8045D FOR BEL/NLD <DUTCH>		√	chg
(1)	LF6339008	1	USER'S GUIDE, MFC8440/8840D/8840DN FOR BEL/CHE <FRENCH>		√	chg
(1)	LF6337008	1	USER'S GUIDE, MFC8440/8840D/8840DN FOR BEL/NLD <DUTCH>		√	chg
(1)	LF6335010	1	USER'S GUIDE, DCP8040/8045D FOR CHE <GERMAN>		√	chg
(1)	LF6337010	1	USER'S GUIDE, MFC8440/8840D FOR CHE <GERMAN>		√	chg
(1)	LF6335013	1	USER'S GUIDE, DCP8040/8045D FOR DEN		√	chg
(1)	LF6337013	1	USER'S GUIDE, MFC8440/8840D FOR DEN		√	chg
(1)	LF6335015	1	USER'S GUIDE, DCP8040/8045D/8045DN FOR SPA		√	chg
(1)	LF6337015	1	USER'S GUIDE, MFC8440/8840D/8840DN FOR SPA		√	chg
(1)	LF6335016	1	USER'S GUIDE, DCP8040/8045D FOR ITA		√	chg
(1)	LF6337016	1	USER'S GUIDE, MFC8440/8840D FOR ITA		√	chg
(1)	LF6335018	1	USER'S GUIDE, DCP8040/8045D FOR POR		√	chg
(1)	LF6337018	1	USER'S GUIDE, MFC8440/8840D/8840DN FOR POR		√	chg
(1)	LF6337020	1	USER'S GUIDE, MFC8440 FOR CHN			ADD
(1)	LF6337040	1	USER'S GUIDE, MFC8440/8840D FOR ASA/OCE			chg

www.drukparts.pl

REF No.	CODE	Q'TY	DESCRIPTION	RECOMMEND	ORDER TO BIUK	REMARKS
(1)	LF6348001	1	CARTON, BROTHER, DCP8040	√		chg
(1)	LF6349001	1	CARTON, BROTHER, DCP8045D	√		chg
(1)	LF6350001	1	CARTON, BROTHER, DCP8045DN	√		chg
(1)	LF6351001	1	CARTON, BROTHER, MFC8440	√		chg
(1)	LF6623001	1	CARTON, BROTHER, MFC8440 FOR CHN	√		ADD
(1)	LF6352001	1	CARTON, BROTHER, MFC8840D	√		chg
(1)	LF6353001	1	CARTON, BROTHER, MFC8840DN	√		chg
(2)	UE1688001	1	PE BAG 1000X1000H			
(3)	LE8762001	1	POLYSTYRENE FORM PAD ASSY, DCP8040, MFC8440			
(3)	LE8757001	1	POLYSTYRENE FORM PAD ASSY, FOR DCP8045D/8045DN, MFC8840D/8840DN			
(4)	LF6358001	1	QUICK SETUP GUIDE, DCP8040/8045D/8045DN FOR GER			chg
(4)	LF6360001	1	QUICK SETUP GUIDE, MFC8440/8840D/8840DN FOR GER/AUS			chg
(4)	LF6366001	1	QUICK SETUP GUIDE, DCP8040/8045D/8045DN FOR UK/ASA/PND/GNR <ENGLISH>			chg
(4)	LF6361001	1	QUICK SETUP GUIDE, MFC8440/8840D/8840DN FOR UK/IRE			chg
(4)	LF6359001	1	QUICK SETUP GUIDE, DCP8040/8045D/8045DN FOR FRA			chg
(4)	LF6362001	1	QUICK SETUP GUIDE, MFC8440/8840D/8840DN FOR FRA			chg
(4)	LF6367001	1	QUICK SETUP GUIDE, DCP8040/8045D FOR BEL/NLD <DUTCH>		√	chg
(4)	LF6369001	1	QUICK SETUP GUIDE, DCP8040/8045D FOR BEL/CHE <FRENCH>		√	chg
(4)	LF6368001	1	QUICK SETUP GUIDE, MFC8440/8840D/8840DN FOR BEL/NLD <DUTCH>		√	chg
(4)	LF6371001	1	QUICK SETUP GUIDE, MFC8440/8840D/8840DN FOR BEL/CHE <FRENCH>		√	chg
(4)	LF6370001	1	QUICK SETUP GUIDE, DCP8040/8045D FOR CHE <GERMAN>		√	chg
(4)	LF6372001	1	QUICK SETUP GUIDE, MFC8440/8840D FOR CHE <GERMAN>		√	chg
(4)	LF6374001	1	QUICK SETUP GUIDE, DCP8040/8045D FOR DEN/PND <DANISH>		√	chg
(4)	LF6375001	1	QUICK SETUP GUIDE, MFC8440/8840D FOR DEN/PND <DANISH>		√	chg
(4)	LF6376001	1	QUICK SETUP GUIDE, DCP8040/8045D/8045DN FOR SPA		√	chg
(4)	LF6377001	1	QUICK SETUP GUIDE, MFC8440/8840D/8840DN FOR SPA		√	chg
(4)	LF6378001	1	QUICK SETUP GUIDE, DCP8040/8045D FOR ITA		√	chg
(4)	LF6379001	1	QUICK SETUP GUIDE, MFC8440/8840D FOR ITA		√	chg
(4)	LF6380001	1	QUICK SETUP GUIDE, DCP8040/8045D FOR POR		√	chg
(4)	LF6381001	1	QUICK SETUP GUIDE, MFC8440/8840D/8840DN FOR POR		√	chg
(4)	LF6373001	1	QUICK SETUP GUIDE, MFC8440/8840D FOR PND <ENGLISH>		√	chg
(4)	LF6382001	1	QUICK SETUP GUIDE, DCP8040/8045D FOR PND <NORWEGIAN>		√	chg
(4)	LF6385001	1	QUICK SETUP GUIDE, MFC8440/8840D FOR PND <NORWEGIAN>		√	chg
(4)	LF6383001	1	QUICK SETUP GUIDE, DCP8040/8045D FOR PND <SWEDISH>		√	chg
(4)	LF6386001	1	QUICK SETUP GUIDE, MFC8440/8840D FOR PND <SWEDISH>		√	chg
(4)	LF6384001	1	QUICK SETUP GUIDE, DCP8040/8045D FOR PND <FINNISH>		√	chg
(4)	LF6387001	1	QUICK SETUP GUIDE, MFC8440/8840D FOR PND <FINNISH>		√	chg
(4)	LF6624001	1	QUICK SETUP GUIDE, MFC8440 FOR CHN			ADD
(4)	LF6363001	1	QUICK SETUP GUIDE, MFC8440/8840D FOR ASA/OCE			chg
(4)	LF6364001	1	QUICK SETUP GUIDE, MFC8440/8840D FOR GNR			chg

www.dukparts.pl

brother

www.drukparts.pl

PL-FAX085
8C5933
Ver. T-1